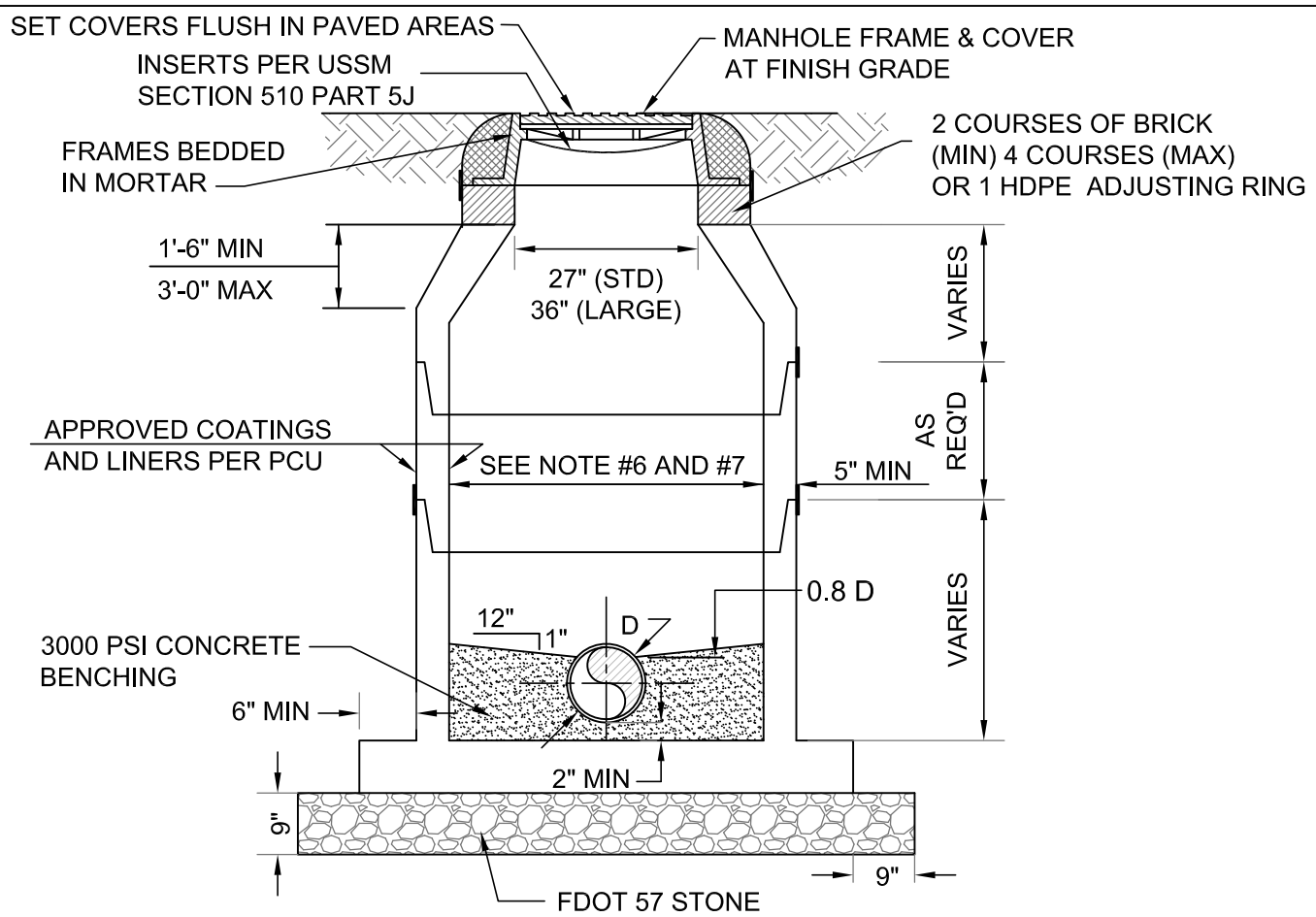

NOT TO SCALE

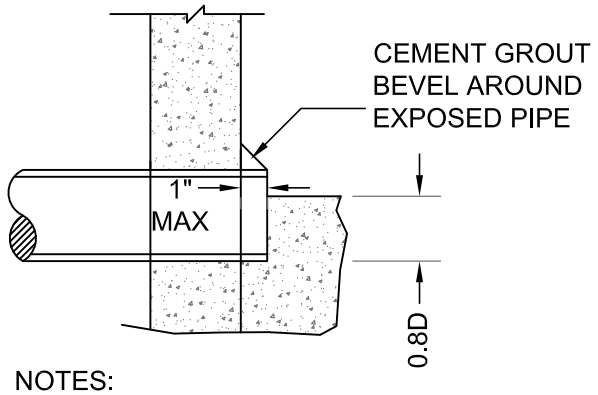

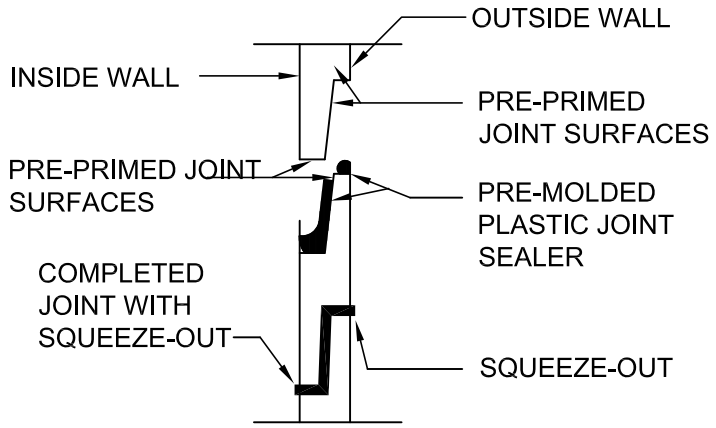

NOTES:

1. INTERIOR DROP CONNECTIONS ARE REQUIRED WHENEVER THE INVERT OF THE INFLUENT SEWER IS 24" OR MORE ABOVE THE INVERT OF THE MANHOLE. THE DIAMETER OF THE DROP MANHOLE SHALL BE 5'-0".
2. ECCENTRIC CONE DESIGN MAY BE USED AS AN ALTERNATIVE, AS APPROVED.
3. A FLOW CHANNEL SHALL BE CONSTRUCTED INSIDE MANHOLE TO DIRECT INFLUENT INTO FLOW STREAM.
4. LIFT HOLES THROUGH STRUCTURE ARE NOT PERMITTED.
5. HDPE ADJUSTING RINGS MAY BE SUBSTITUTED FOR BRICK RISERS.
6. MASTER MANHOLES SHALL BE 5'-0" DIAMETER.
7. MANHOLE DIAMETER SHALL BE 4'-0" MIN FOR MAINS 8" TO 24" (STD), 5'-0" MIN FOR MAINS 24" TO 36" AND 6'-0" MIN FOR SEWER 36" AND LARGER..

PRECAST CONCRETE MANHOLE (TYPICAL)	**FIGURE WW-01-1**
POLK COUNTY UTILITIES, FLORIDA	**NOVEMBER, 2013**

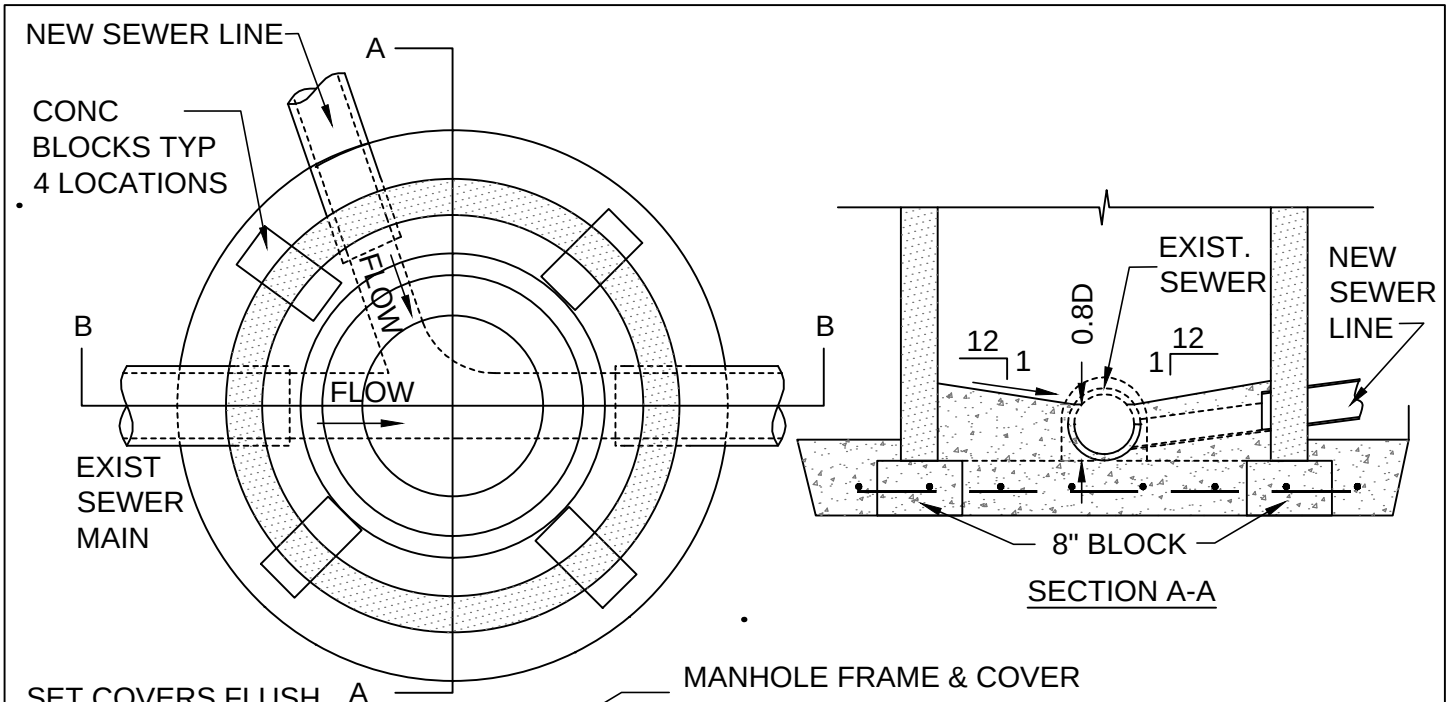

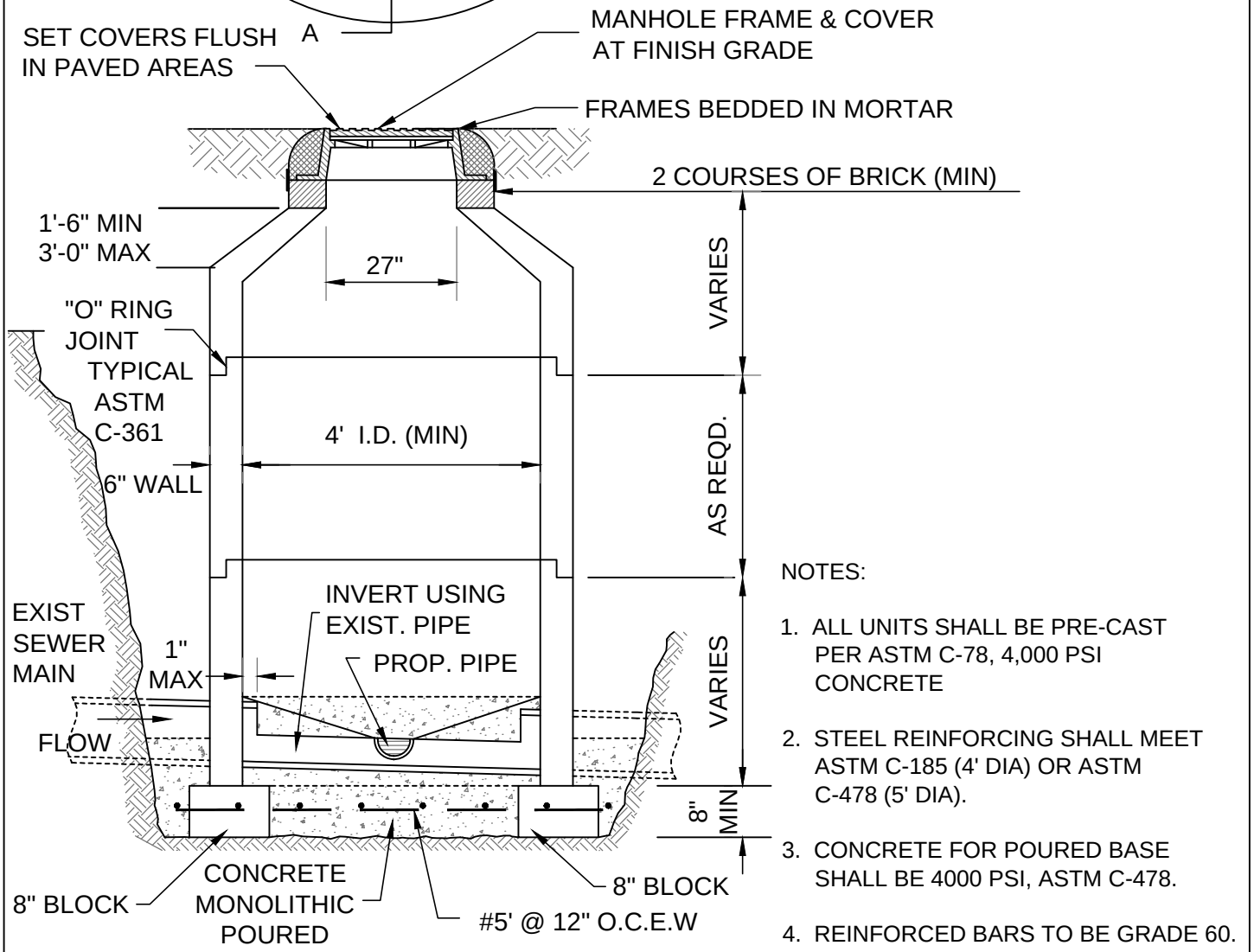

NOTES:

1. ALL UNITS SHALL BE PRE-CAST PER ASTM C-78, 4,000 PSI CONCRETE
2. STEEL REINFORCING SHALL MEET ASTM C-185 (4' DIA) OR ASTM C-478 (5' DIA).
3. CONCRETE FOR POURED BASE SHALL BE 4000 PSI, ASTM C-478.
4. REINFORCED BARS TO BE GRADE 60.
5. USE FLEXIBLE SEAL AROUND EXIST SEWER AT NEW WALL, THEN GROUT WITH NON-SHRINK GROUT.

DOGHOUSE CONCRETE MANHOLE CONNECTION	FIGURE WW-01-2
POLK COUNTY UTILITIES, FLORIDA	DECEMBER, 2010

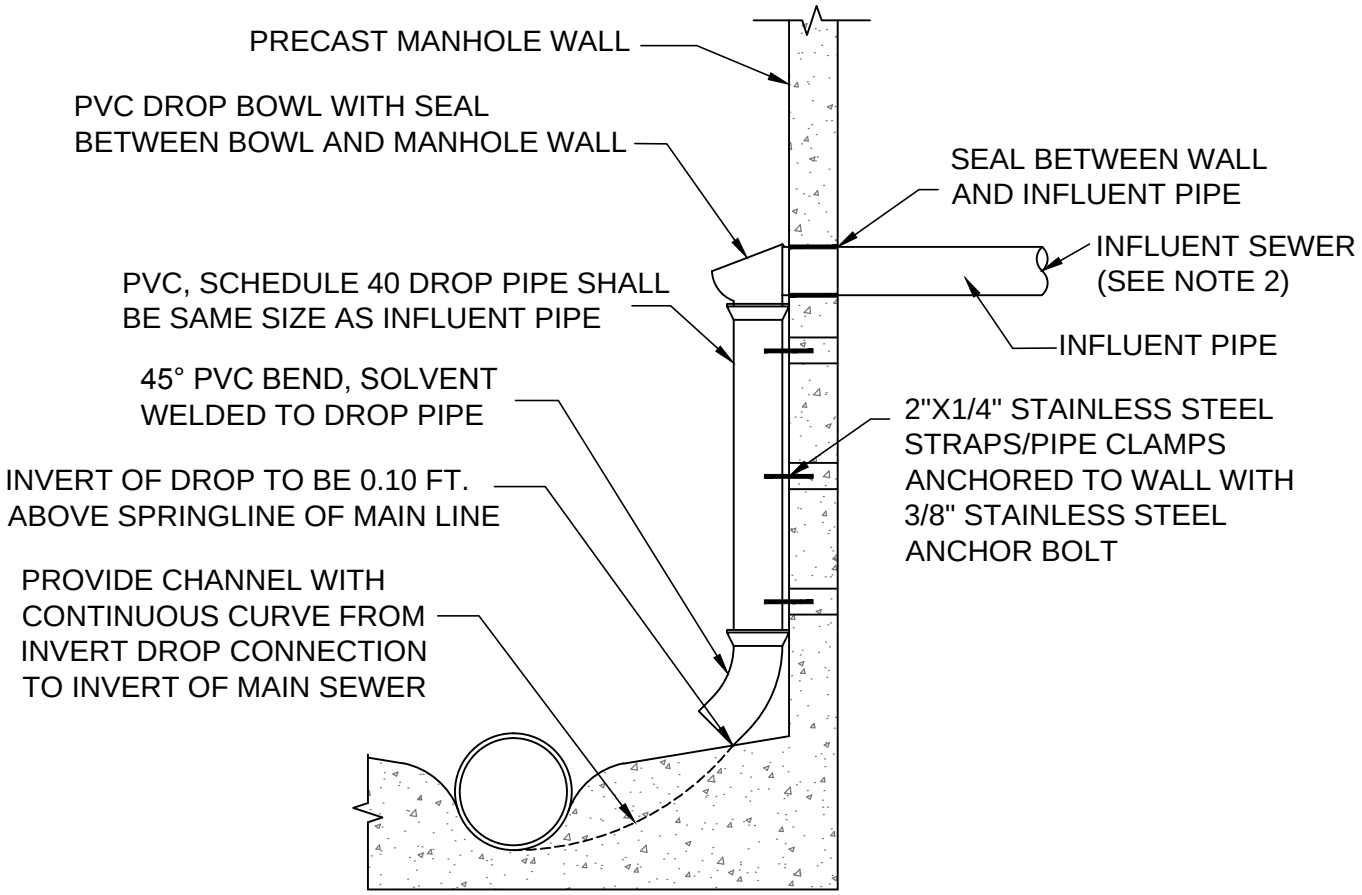

MANHOLE STANDARD INTERIOR DROP CONNECTION

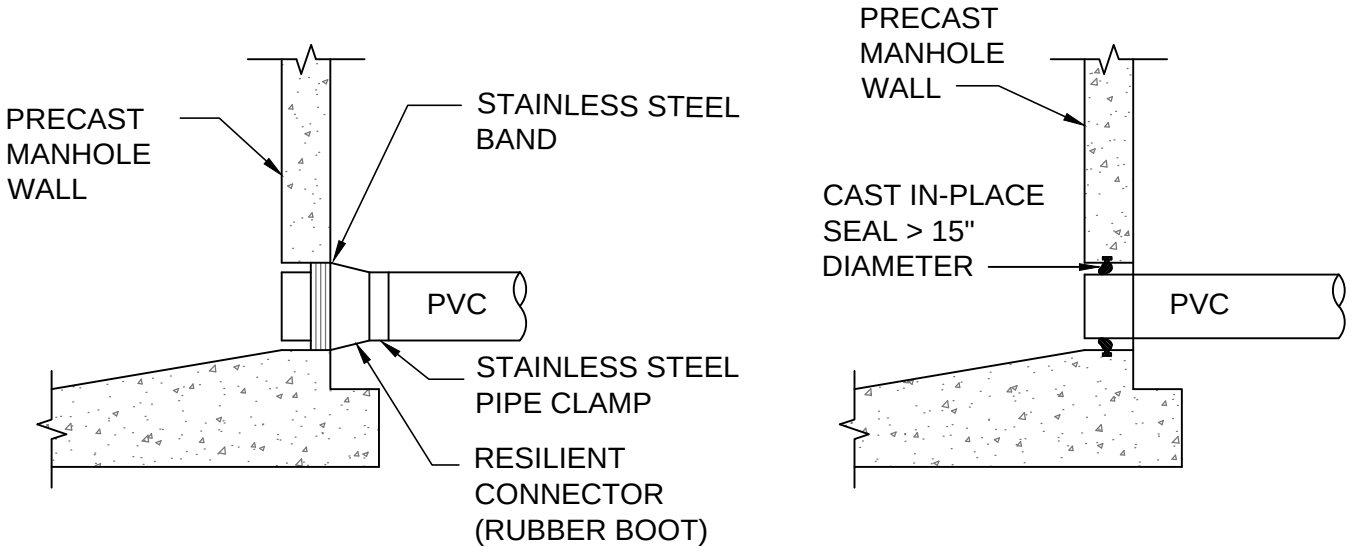

STANDARD PRECAST MANHOLE PIPE CONNECTION

NOTES:

1. DROP PIPE AND FITTINGS SHALL BE OF EQUAL SIZE AS THE INFLUENT SEWER.
2. INSIDE DROP CONNECTIONS SHALL BE REQUIRED FOR ALL INFLUENT LINES WHICH HAVE AN INVERT 2' OR MORE ABOVE THE MANHOLE INVERT.
3. ALTERNATE WATER TIGHT CONNECTION DETAILS FOR CONNECTION OF 24" DIAMETER PIPES AND LARGER MUST BE APPROVED BY PCU.

MANHOLE CONNECTION	**FIGURE WW-02**
POLK COUNTY UTILITIES, FLORIDA	**DECEMBER, 2010**

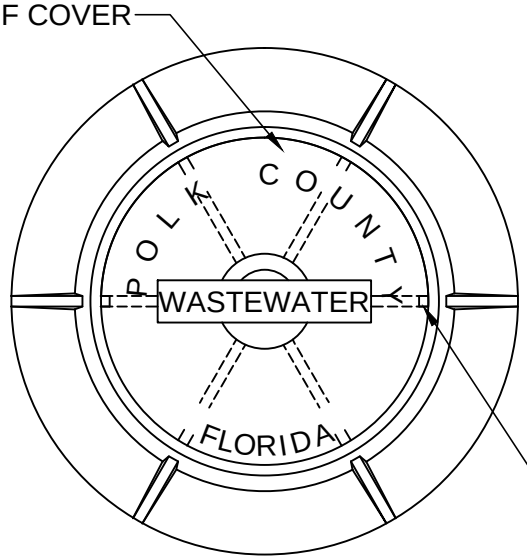

PLAN

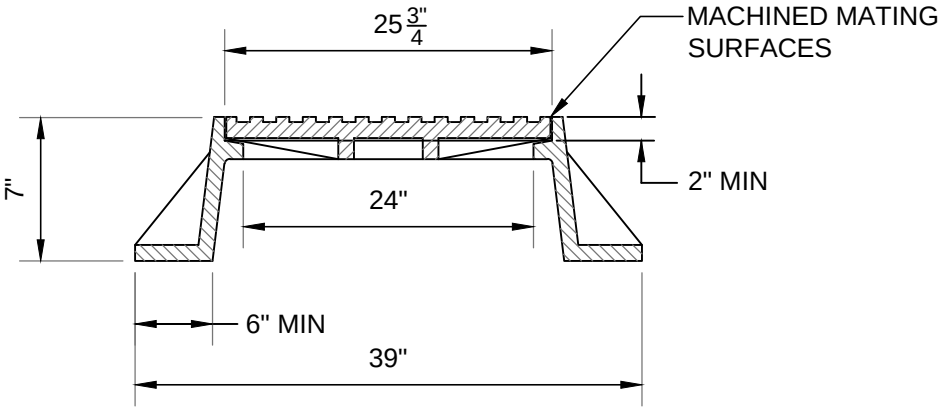

ELEVATION
(MANHOLE INSERT NOT SHOWN)

NOTES:

1. THE WORDS 'POLK COUNTY' SHALL NOT BE USED ON PRIVATE MANHOLES.
2. RING SHALL RECEIVE 2 COATS OF BITUMINOUS (COAL TAR) EPOXY PRIOR TO INSTALLATION.
3. ALL MANHOLE COVER AND FRAME SETS SHALL INCLUDE AN APPROPRIATE SIZED INSERT.
4. ALL MATERIALS SHALL BE IN ACCORDANCE WITH THE APPROVED MATERIALS CHECKLIST.

STANDARD MANHOLE FRAME AND COVER SET (FOUR FOOT INSIDE DIAMETER MANHOLE)	FIGURE WW-03-1
POLK COUNTY UTILITIES, FLORIDA	DECEMBER, 2010

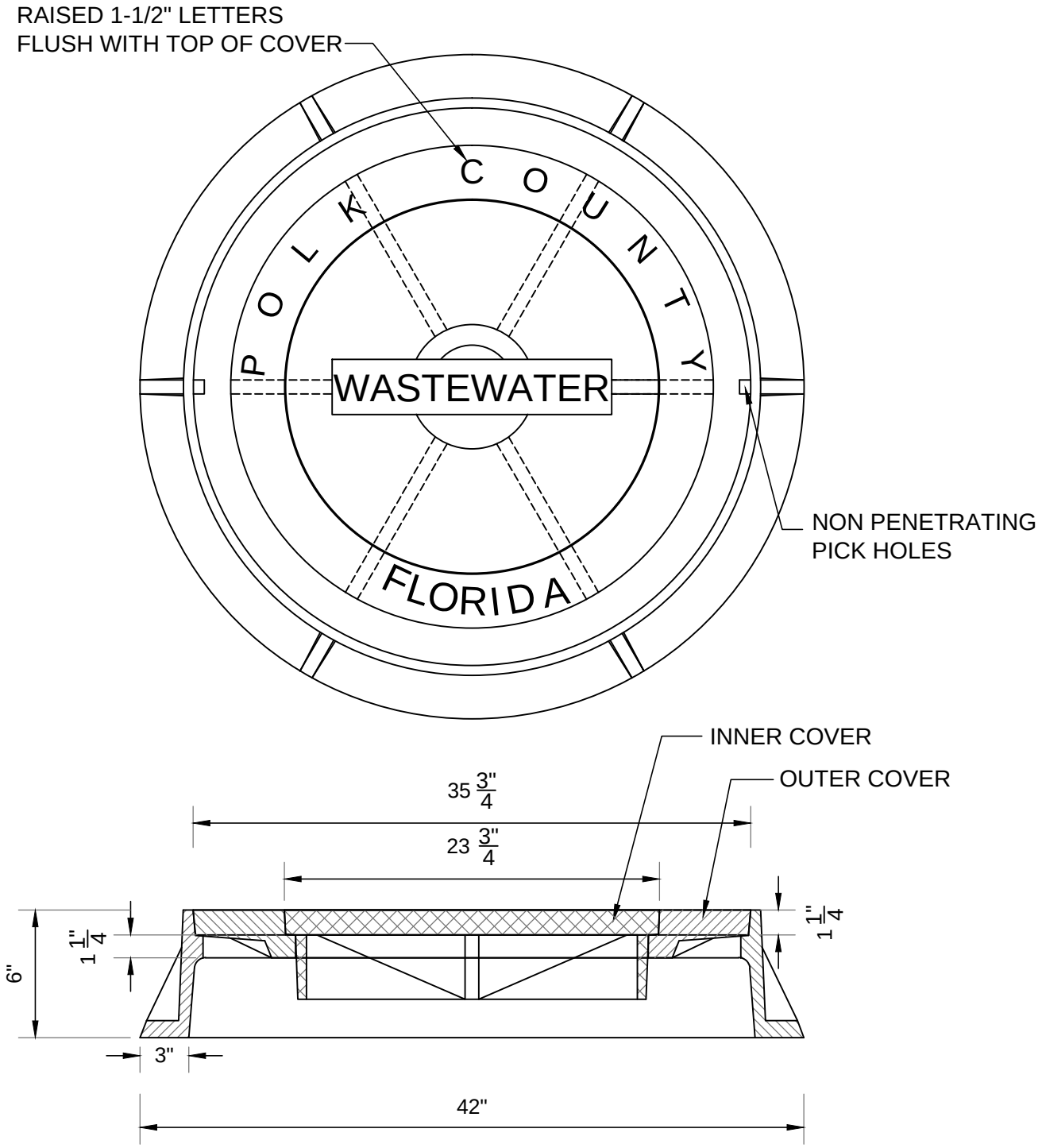

ELEVATION

NOTES:

1. THE WORDS 'POLK COUNTY' SHALL NOT TO USED ON PRIVATE MANHOLES.
2. RING SHALL RECEIVE 2 COATS OF BITUMINOUS (COAL TAR) EPOXY PRIOR TO INSTALLATION.
3. ONLY THE INNER COVER OF THIS MANHOLE COVER AND FRAME SET SHALL INCLUDE AN APPROPRIATE SIZED INSERT.
4. ALL MATERIALS SHALL BE IN ACCORDANCE WITH THE APPROVED MATERIALS CHECKLIST.

LARGE MANHOLE FRAME AND COVER SET (LARGE MANHOLES - FIVE FOOT AND LARGER INSIDE DIAMETER)	**FIGURE WW-03-2**
POLK COUNTY UTILITIES, FLORIDA	**DECEMBER, 2010**

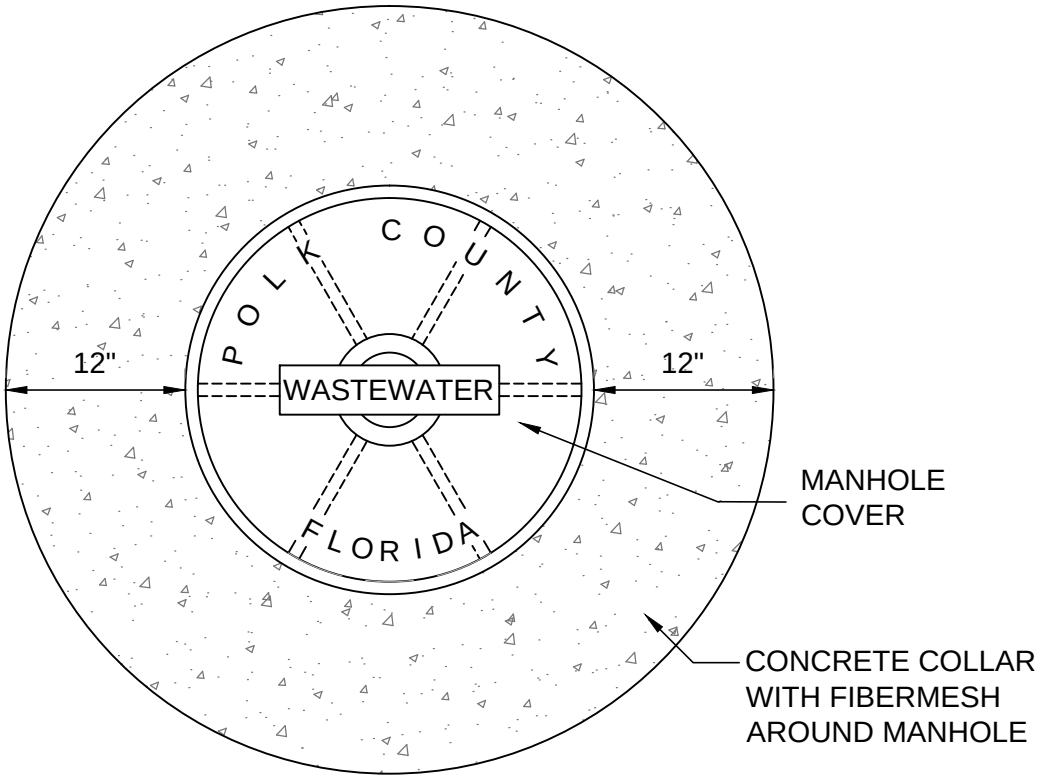

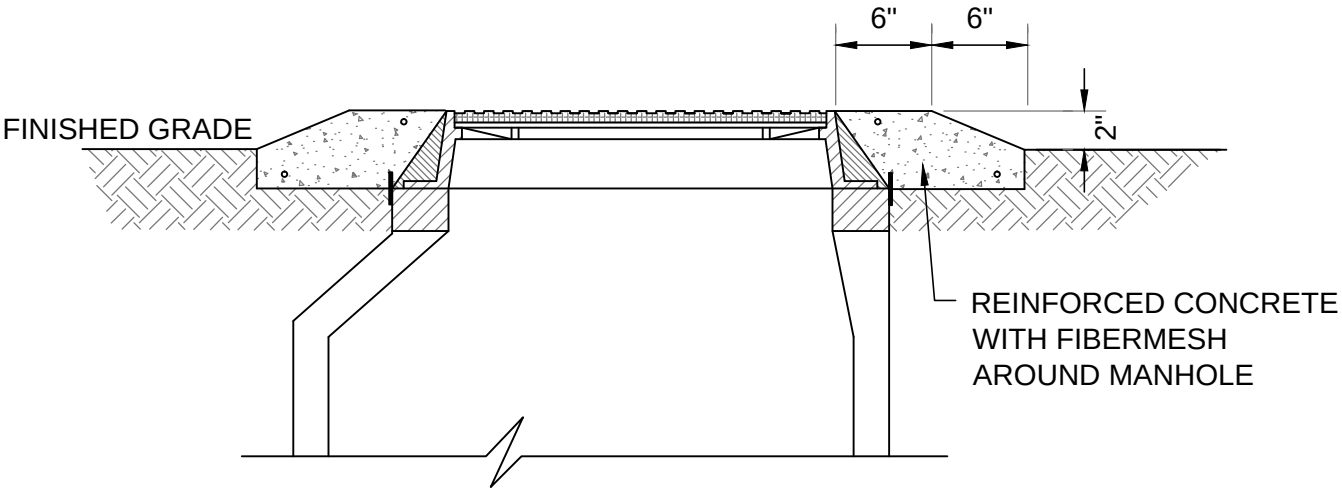

NOTES:

1. THE WORDS 'POLK COUNTY' SHALL NOT APPEAR ON PRIVATE MANHOLES.

2. AREAS SUPPORTING CONCRETE COLLAR SHALL BE PROPERLY COMPACTED, TO 95 % MAXIMUM DENSITY PER AASHTO T-180 FOR FIRST 6" UNDER THE COLLAR AREA.

MANHOLE IN NON-PAVED AREA	**FIGURE WW-04**
POLK COUNTY UTILITIES, FLORIDA	**DECEMBER, 2010**

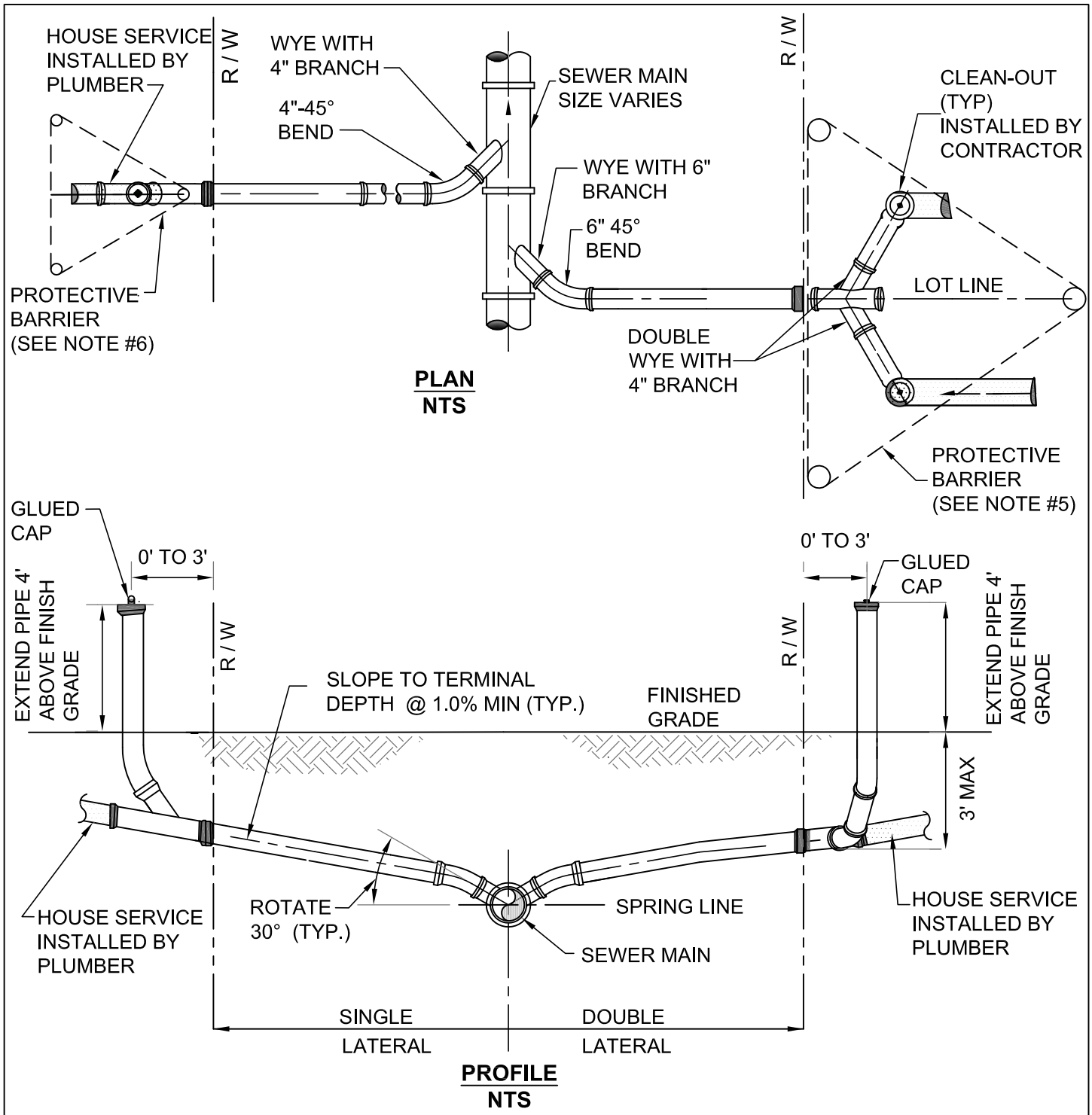

NOTES:

1. INVERT OF SERVICE LATERAL SHALL NOT ENTER SEWER MAIN BELOW SPRING LINE.
2. SERVICE LATERAL CLEAN OUT PIPE SHALL BE EXTENDED AND CAPPED BY CONTRACTOR.
3. ALL FITTINGS SHOWN ARE TO BE INSTALLED.
4. BUILDER'S PLUMBER WILL REMOVE PLUG, ADJUST CLEAN OUT PIPE TO GRADE, AND CONNECT SERVICE LATERAL TO HOUSE.
5. PROTECTIVE BARRIER TO BE 3-2" x4" or 2" POLES w/ WITH RED CONSTRUCTION WARNING FENCE OR TAPE.

SERVICE LATERAL (STANDARD)	FIGURE WW-05-1
POLK COUNTY UTILITIES, FLORIDA	NOVEMBER, 2013

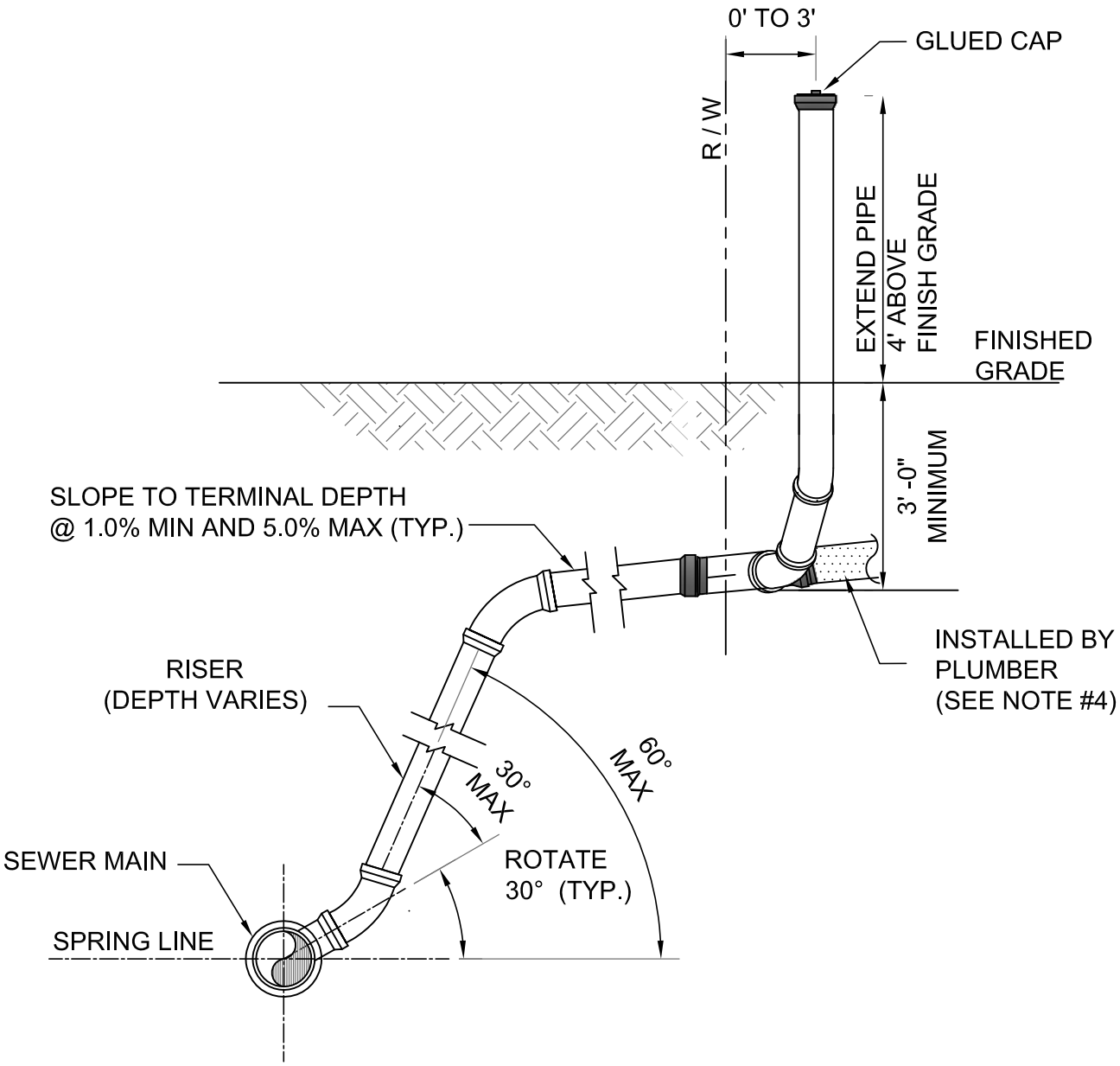

PROFILE
NTS

NOTES:
1. INVERT OF SERVICE LATERAL SHALL NOT ENTER SEWER MAIN BELOW SPRING LINE.
2. SERVICE LATERAL CLEAN OUT PIPE SHALL BE EXTENDED AND CAPPED BY CONTRACTOR.
3. ALL FITTINGS SHOWN ARE TO BE INSTALLED.
4. BUILDER'S PLUMBER WILL REMOVE PLUG, ADJUST CLEAN OUT PIPE TO GRADE, AND CONNECT SERVICE LATERAL TO HOUSE.

SEWER SERVICE (DEEP) (TYPICAL)	**FIGURE WW-5-2**
POLK COUNTY UTILITIES, FLORIDA	**NOVEMBER, 2013**

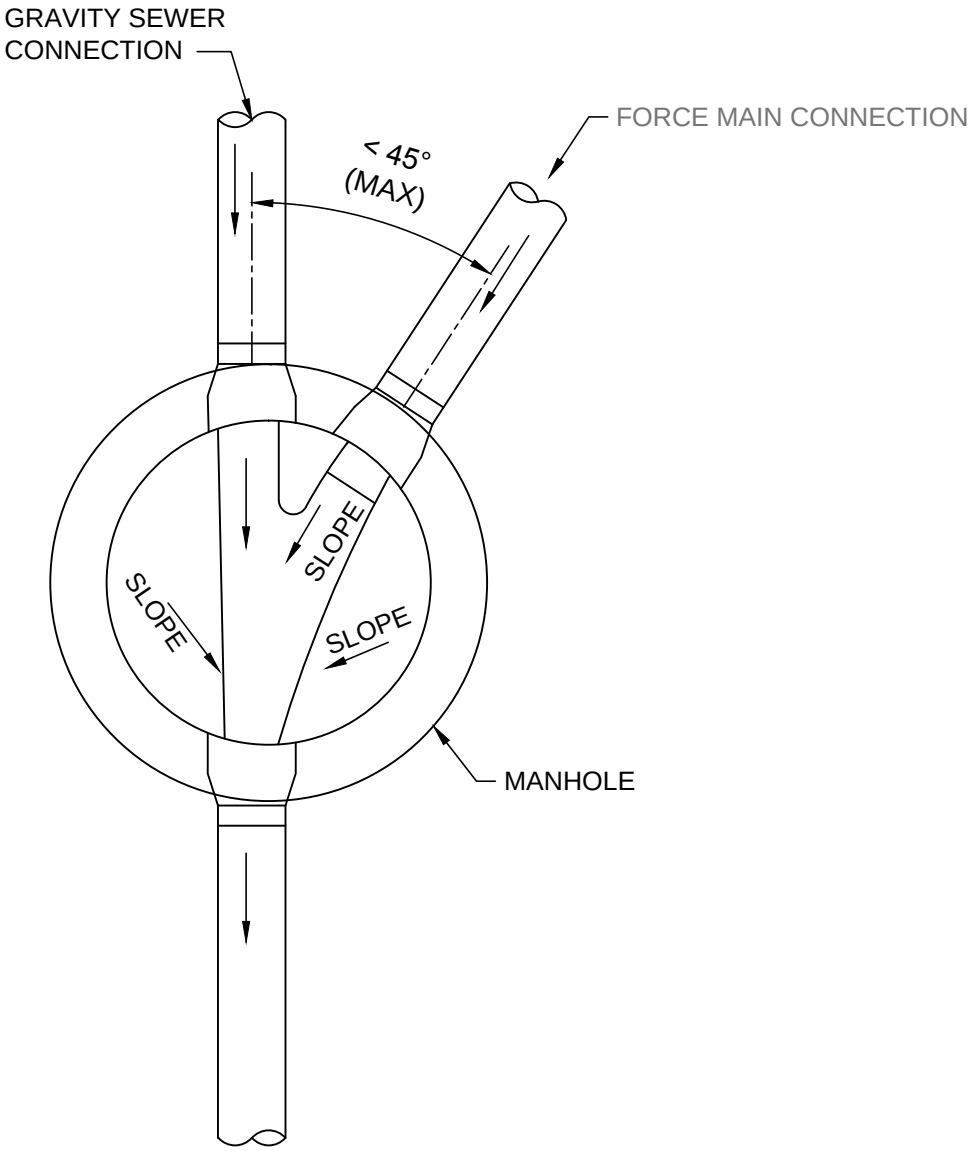

PLAN VIEW

NOTES:

1. FORCE MAIN SHALL BE ORIENTED NORMALLY 45° OR LESS TO FLOW TO FACILITATE FLOW AND SHALL ENTER MANHOLE AT THE FLOW LINE.

2. PROVIDE BENCHING AS REQUIRED FOR FORCE MAIN.

3. MANHOLE RECEIVING FORCE MAIN SHALL BE COATED WITH SPECIALIZED COATING OR FACTORY INSTALLED LINING.

4. FORCE MAIN CONNECTION DESIGN SHALL BE AS APPROVED BY PCU.

FORCE MAIN TO GRAVITY SEWER MANHOLE CONNECTION (TYPICAL)	**FIGURE WW-06-1**
POLK COUNTY UTILITIES, FLORIDA	**DECEMBER, 2010**

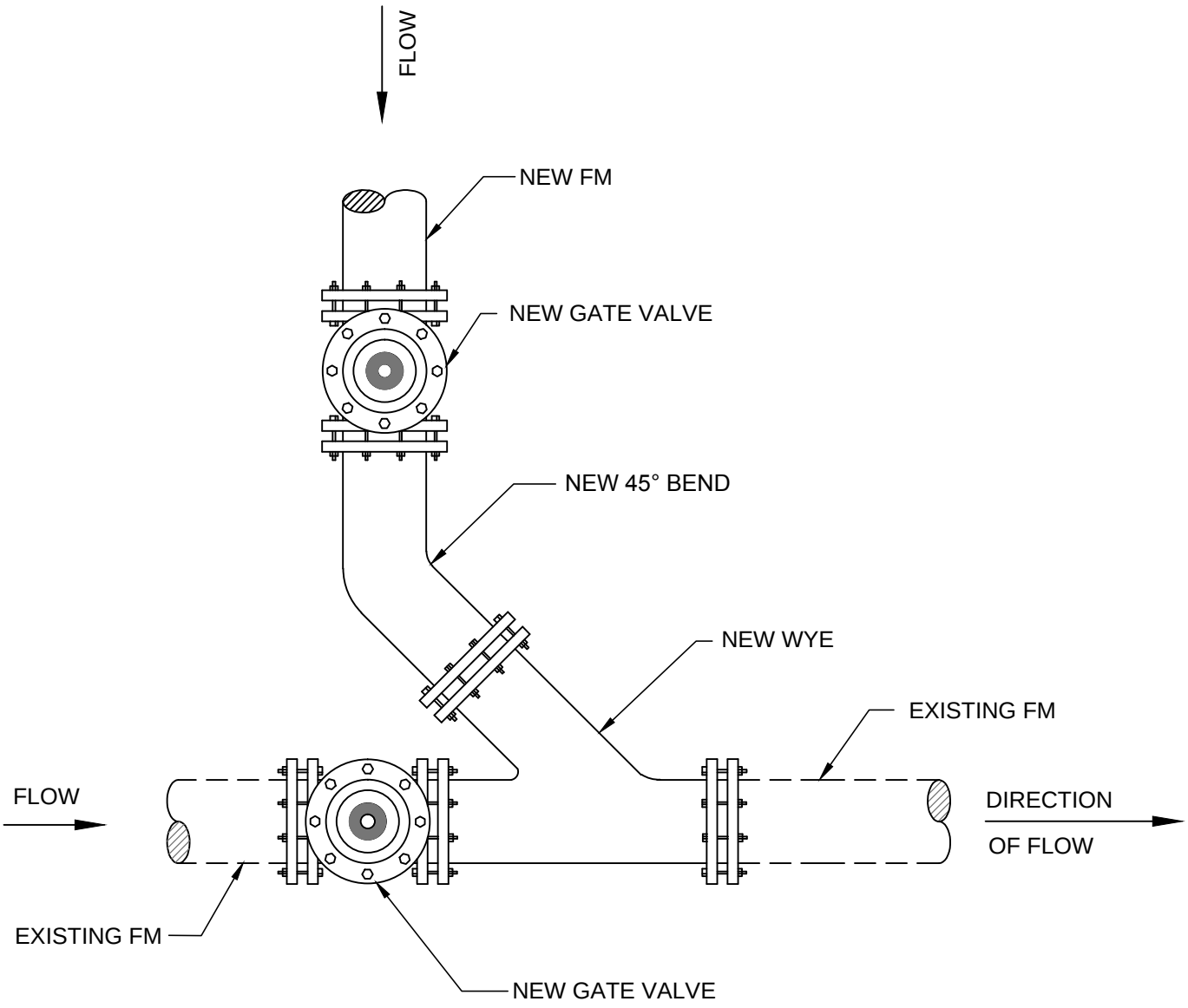

PLAN VIEW

NOTES:

1. ALL JOINTS (INCLUDING JOINTS ON EXISTING MAINS) SHALL BE RESTRAINED IN ACCORDANCE WITH USSM CHAPTER 3. ENGINEER SHALL VERIFY DESIGN ASSUMPTIONS AND INCREASE RESTRAINED LENGTHS AS REQUIRED.

FORCE MAIN MANIFOLD CONNECTION (TYPICAL)	**FIGURE WW-06-2**
POLK COUNTY UTILITIES, FLORIDA	**NOVEMBER, 2013**

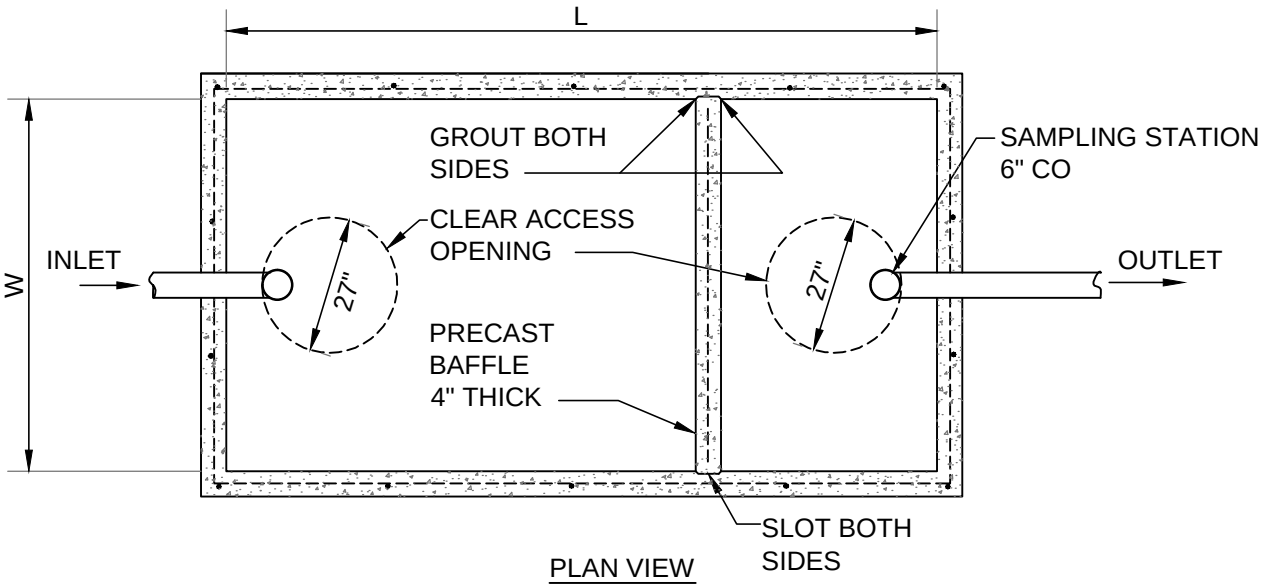

PLAN VIEW

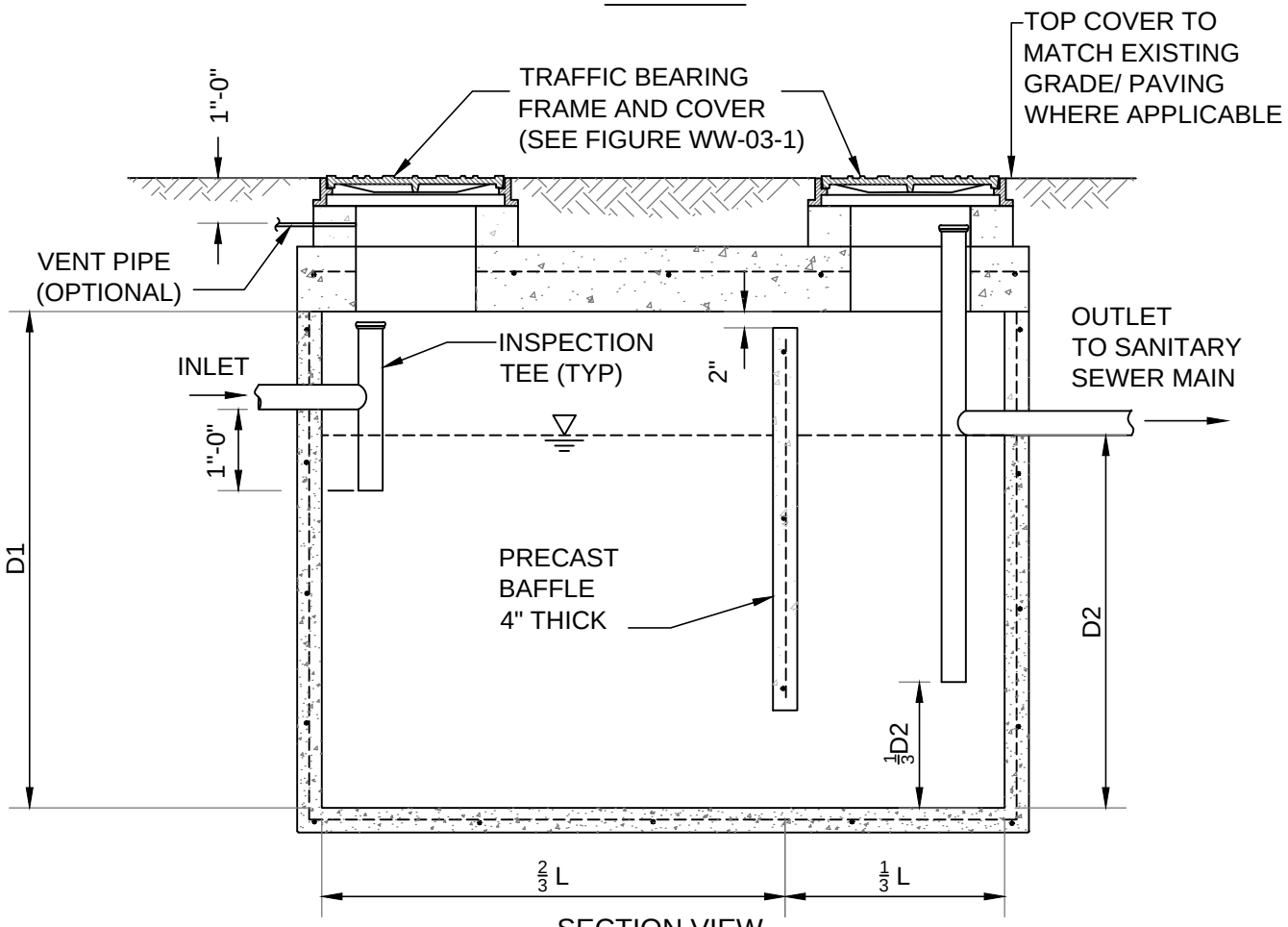

SECTION VIEW

NOTES:

1. SIZE AND DIMENSIONS OF GREASE INTERCEPTOR SHALL BE IN ACCORDANCE WITH THE UTILITIES STANDARDS AND SPECIFICATIONS MANUAL.
2. LOADS: H-20 TRUCK WHEELS WITH 30% IMPACT PER AASHTO.

LEGEND :

L = INSIDE LENGTH
W = INSIDE WIDTH
D1 = DISTANT FROM INSIDE TOP OF STRUCTURE TO INSIDE BOTTOM OF STRUCTURE
D2 = DISTANT FROM OUTLET INVERT TO STRUCTURE INVERT

GREASE INTERCEPTOR (TYPICAL)	FIGURE WW-07
POLK COUNTY UTILITIES, FLORIDA	DECEMBER, 2010

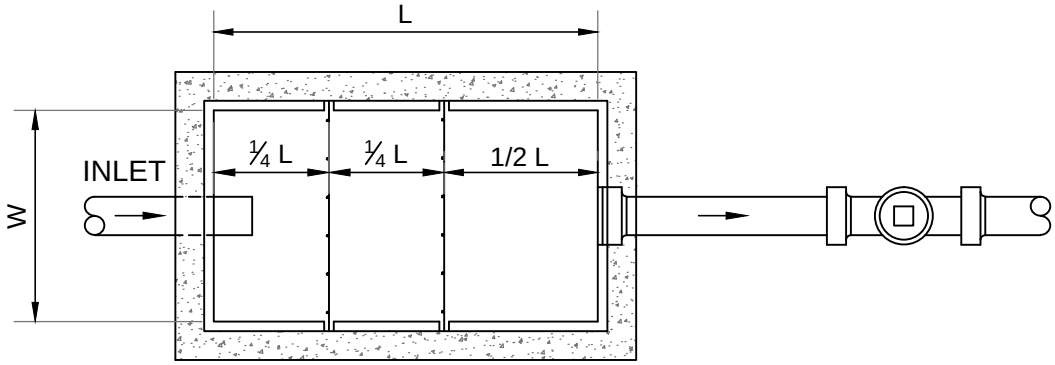

PLAN

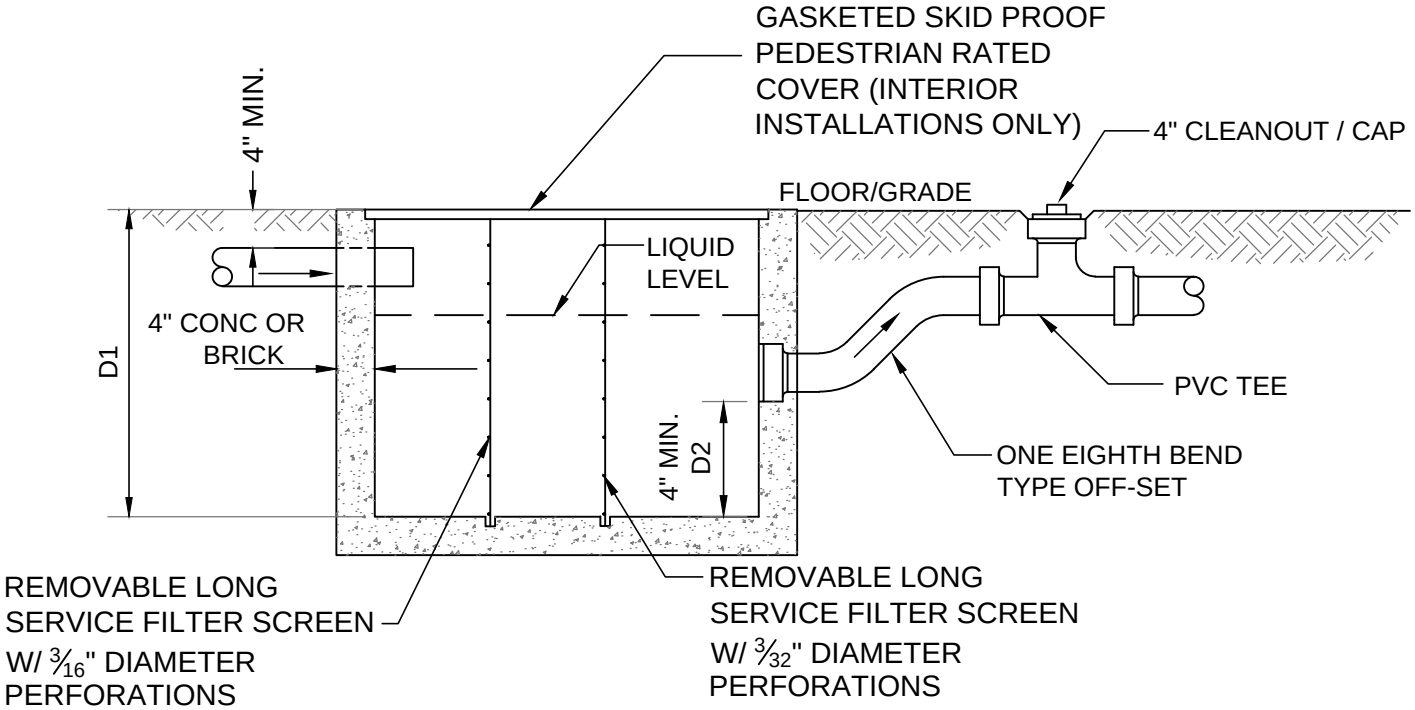

SECTION

NOTES:

1. EXTERIOR INSTALLED TRAPS SHALL BE DESIGNED FOR HS-20 TRAFFIC LOADS.

LEGEND :

L = INSIDE LENGTH
W = INSIDE WIDTH
D1 = DISTANT FROM INSIDE TOP OF STRUCTURE TO INSIDE BOTTOM OF STRUCTURE
D2 = DISTANT FROM OUTLET INVERT TO STRUCTURE INVERT

LINT / HAIR TRAP INTERCEPTOR (TYPICAL)	**FIGURE WW-08**
POLK COUNTY UTILITIES, FLORIDA	**DECEMBER, 2010**

GENERAL NOTES:

1. ALL INTERIOR METAL SURFACES SHALL BE PAINTED WITH 2 COATS OF BITUMINOUS EPOXY PAINT.

2. EXTERIOR OF WET WELL SHALL RECEIVE TWO (2) COATS BITUMINOUS EPOXY.

3. INTERIOR OF WET WELL SHALL HAVE PCU APPROVED FACTORY INSTALLED LINER OR FIELD COATING.

4. VALVE VAULTS ARE ONLY TO BE USED WITH PRIOR PCU APPROVAL.

5. ALL LOCATIONS WHERE PIPES ENTER OR LEAVE THE WET WELL SHALL BE MADE WATER TIGHT BY USE OF A RUBBER TYPE PIPE BOOT w/ NON-SHRINK GROUT.

6. THERE SHALL BE NO VALVES OR ELECTRICAL JUNCTION BOXES EXCEPT FLOAT CABLES IN WET WELL.

7. WET WELL COVERS THAT ARE NOT SUBJECT TO VEHICULAR TRAFFIC SHALL BE (300 PSF RATED) ALUMINUM WITH 316 S.S. HARDWARE AND LOCK BRACKET. IF SUBJECT TO VEHICULAR TRAFFIC, WET WELL COVERS SHALL BE H-20 RATED. SIZE OF WET WELL COVER AS REQUIRED BY PUMP MANUFACTURER AND AS APPROVED BY PCU.

8. PUMPS 25 H.P. AND LARGER SHALL BE 240V/480V, 3-PHASE, W/ SOFT STARTS, SMALLER PUMPS SHALL BE 240V/480V, 3-PHASE, 60 Hz MOTOR, SUBMERSIBLE PUMP AS MANUFACTURED BY HYDROMATIC OR FLYGT ONLY. PUMP MUST BE CAPABLE OF PASSING 3" SOLIDS. ROTO PHASE POWER UNITS ARE STRICTLY PROHIBITED.
   MANUFACTURER: _____ MODEL: _____ IMP:_____ DIA: _____
   SPEED: _____ RPM, DISCHARGE SIZE: _____ IN., VOLTAGE _____, PHASE: 3Ø
   H.P. _____, MIN. SOLID SIZE: _____IN., CURVE: _____

9. OPERATING CONDITIONS SHALL BE _____GPM AT _____FEET TDH.

10. ALL HARDWARE IN WET WELL TO BE 316 STAINLESS STEEL.

11. 4" PLUG VALVES MAY HAVE LEVERS, ALL OTHERS SHALL HAVE GEARBOX W/ HAND WHEELS.

12. WET WELL SHALL BE PROVIDED WITH A GRATE BASED FALL PROTECTION SYSTEM.

13. ALL LOCATIONS WHERE GRAVITY PIPES ENTER OR LEAVE THE WET WELL SHALL BE MADE WATERTIGHT WITH AN APPROVED BOOT.

CONTINUED FIGURE WW-10

GENERAL NOTES (CONTINUED):

(SEE FIGURE WW-09 FOR NOTES 1 TO 13)

14. ALL LOCATIONS WHERE PRESSURE PIPES ENTER THE WET WELL SHALL BE MADE WATERTIGHT WITH A WALL SLEEVE AND SEAL OR NON-SHRINKAGE GROUT.

15. THERE SHALL BE NO VALVES OR ELECTRICAL JUNCTION BOXES EXCEPT FLOAT CABLES IN THE WET WELL.

16. ALL HARDWARE IN WET WELL SHALL BE 316 STAINLESS STEEL.

17. ALL CONNECTIONS IN THE WET WELL SHALL BE FLANGED JOINTS. ALL REMAINING CONNECTIONS BETWEEN THE WET WELL AND THE CONNECTION TO THE EXISTING FORCE MAIN SHALL BE RESTRAINED MECHANICAL JOINTS.

18. CHECK VALVE ARM SHALL BE LOCATED WITH THE SAME ORIENTATION (i.e. ALL ARMS ON THE LEFT SIDE OF VALVE).

19. ALL MATERIALS SHALL BE IN ACCORDANCE WITH THE " APPROVED MATERIALS CHECKLIST".

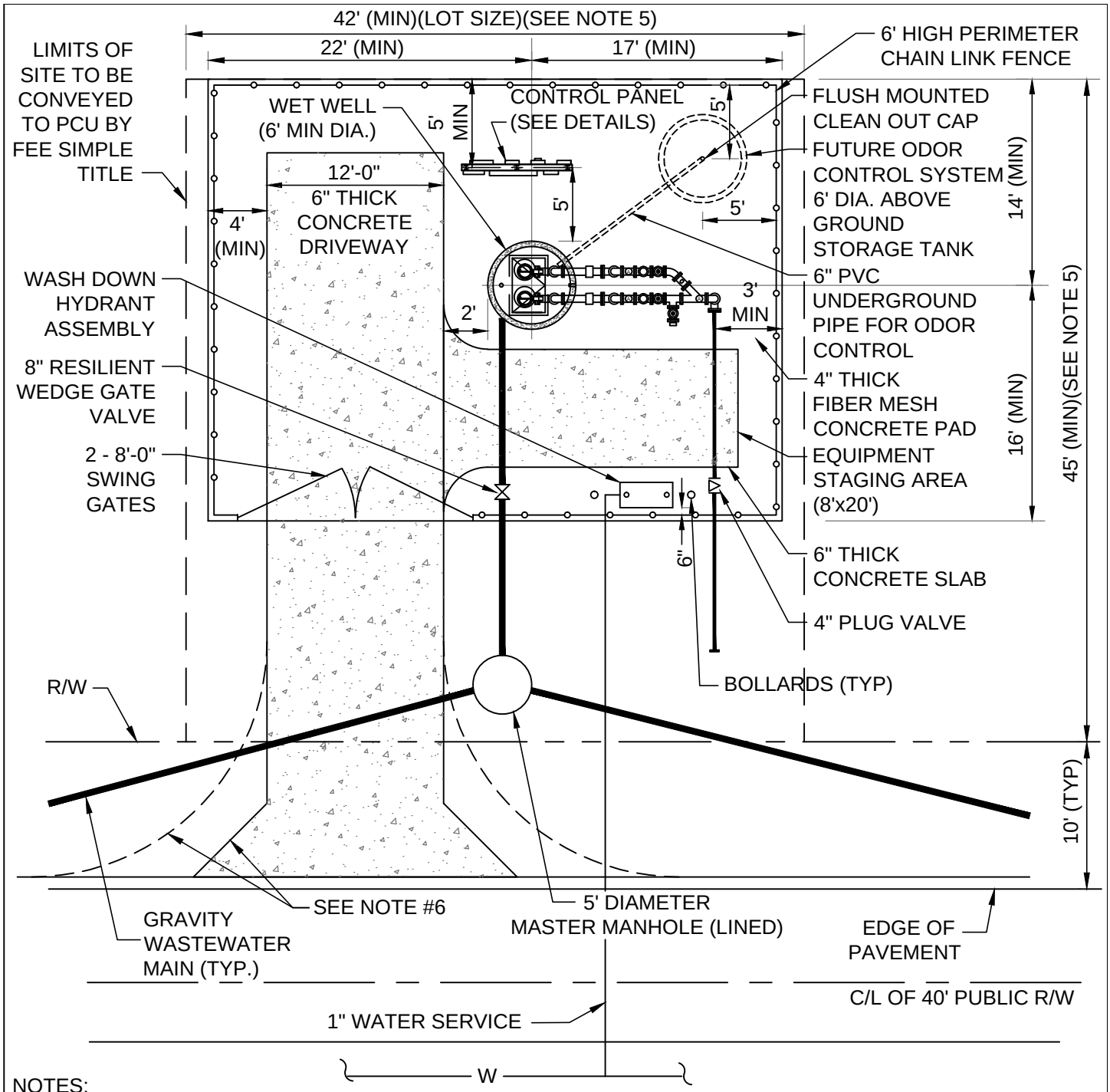

NOTES:

1. WET WELL OPENINGS SHALL BE PROVIDED WITH FALL PREVENTION DEVICES AS SPECIFIED IN THE "APPROVED MATERIALS CHECK LIST".
2. FENCING MAY BE REPLACED WITH OPTIONAL CONCRETE MASONRY WALL (SEE FIGURE WW-17-1)
3. SLOPE OF STATION PAD AND DRIVEWAY SHALL BE 1/8" PER 1' DOWN SLOPE (1.0%). FROM CENTER OF WET WELL TO PERIMETER OF STATION. .
4. MINIMUM DISTANCE BETWEEN FENCE AND ALL INSTALLED EQUIPMENT SHALL BE 5'.
5. THIS DIMENSION SHALL INCREASE 2.0' FOR EACH FOOT OF ADDITIONAL WET WELL DEPTH OVER 15'.
6. USE OF 20' RADIUS OR 5' FLARE OF DRIVEWAY AT ROADWAY SHALL BE DETERMINED BY THE SURROUNDING DRIVEWAY GEOMETRY.
7. ENGINEER SHALL PROVIDE A SCALED (1" = 20' MIN) SITE SPECIFIC DETAIL.
8. DISTANCE OF 5' SHALL BE MAINTAINED FROM THE OUTSIDE EDGE OF THE WET WELL AND THE OUTSIDE EDGE OF THE SUPPORT POSTS FOR THE CONTROL PANEL STRUCTURE.
9. IF GENERATOR REQUIRED IN ACCORDANCE WITH FDEP REQUIREMENTS, THE DESIGN OF THE LIFT STATION IS SUBJECT TO PCU APPROVAL.

DUPLEX LIFT STATION (TYPICAL) **SITE PLAN**	**FIGURE** **WW-11**
POLK COUNTY UTILITIES, FLORIDA	**OCTOBER, 2015**

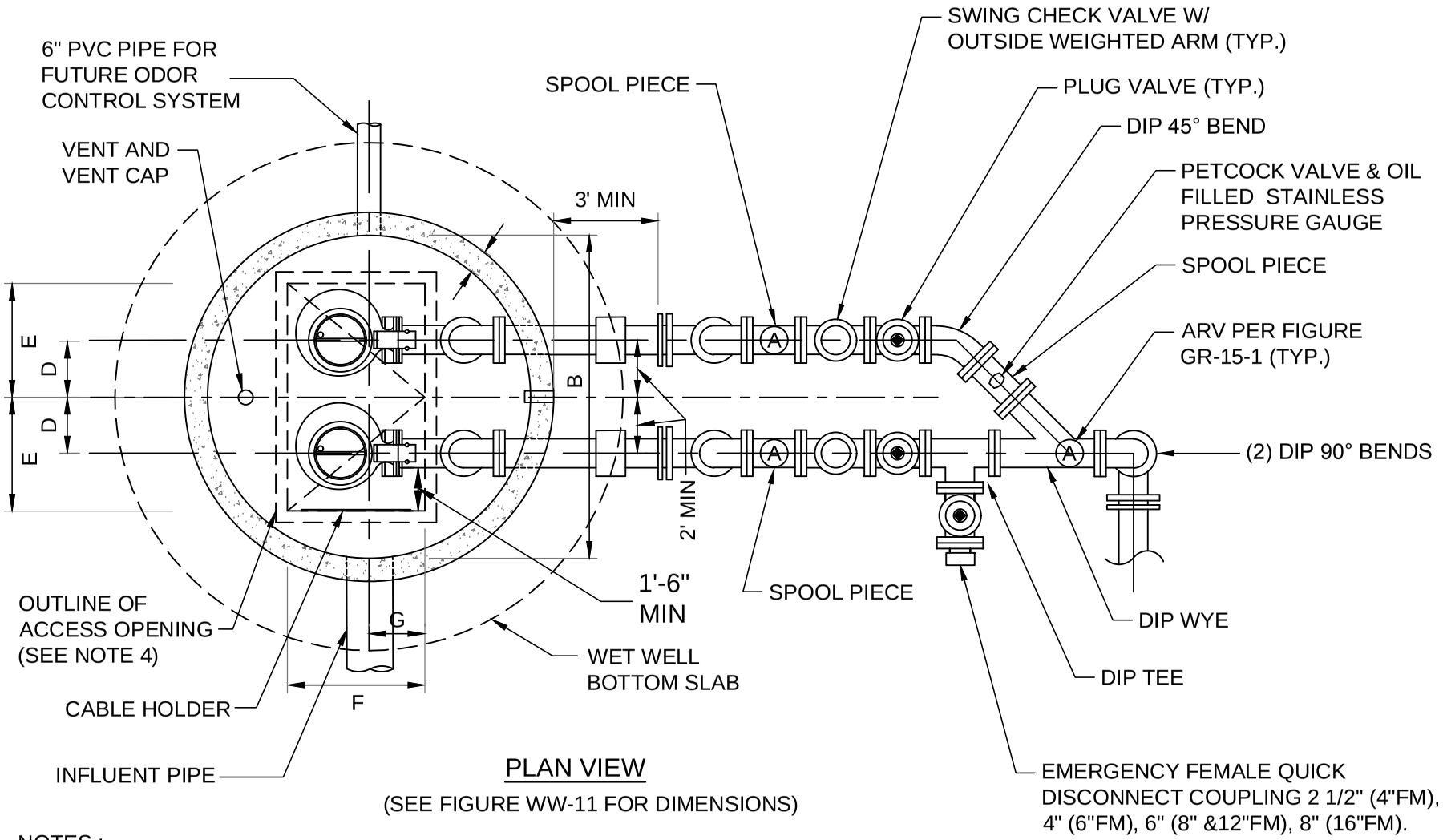

PLAN VIEW

(SEE FIGURE WW-11 FOR DIMENSIONS)

NOTES :

1. WET WELL OPENINGS SHALL BE PROVIDED WITH FALL PREVENTION DEVICES AS SPECIFIED IN THE " APPROVED MATERIALS CHECK LIST".
2. BACKFILL UNDER AND WITHIN 10' OF WET WELL CENTER AND UNDER AND WITHIN 5' OF VAULT SHALL BE PLACED IN 12" LIFTS AND COMPACTED TO 95% MAX DENSITY PER AASHTO T-180, DENSITY TEST RESULTS SHALL BE PROVIDED TO INSPECTOR PRIOR TO PLACEMENT OF SLAB.
3. VALVE BOX SHALL BE ENLARGED IF FLOW METER REQUIRED.
4. HATCH DOOR HINGES FOR WET WELL ACCESS ARE TO BE LOCATED ON OPPOSITE SIDE FROM GUIDE RAILS.

DUPLEX LIFT STATION
PLAN VIEW

FIGURE WW-12-1

POLK COUNTY UTILITIES, FLORIDA

OCTOBER, 2015

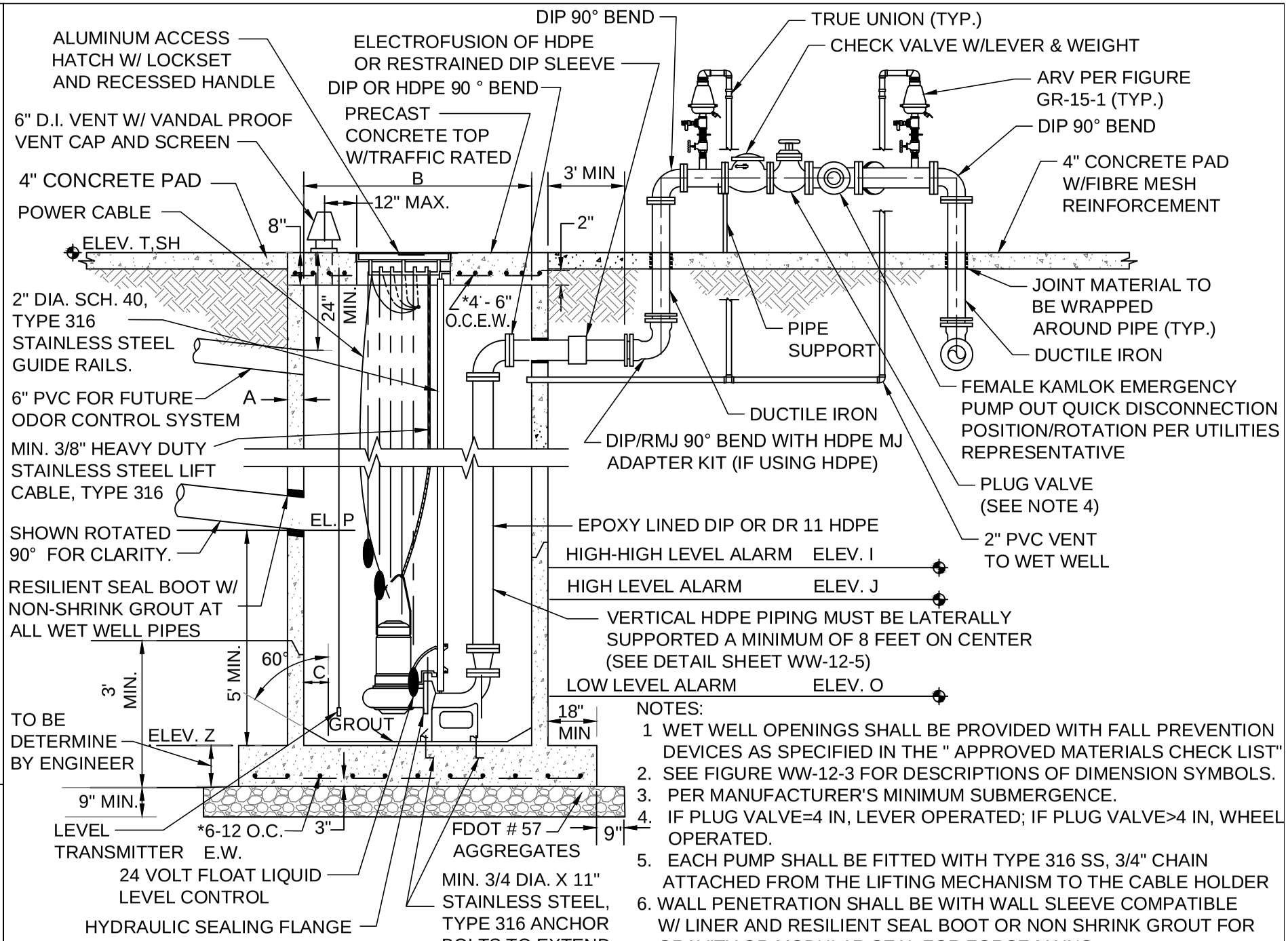

NOTES:

1. WET WELL OPENINGS SHALL BE PROVIDED WITH FALL PREVENTION DEVICES AS SPECIFIED IN THE " APPROVED MATERIALS CHECK LIST"
2. SEE FIGURE WW-12-3 FOR DESCRIPTIONS OF DIMENSION SYMBOLS.
3. PER MANUFACTURER'S MINIMUM SUBMERGENCE.
4. IF PLUG VALVE=4 IN, LEVER OPERATED; IF PLUG VALVE>4 IN, WHEEL OPERATED.
5. EACH PUMP SHALL BE FITTED WITH TYPE 316 SS, 3/4" CHAIN ATTACHED FROM THE LIFTING MECHANISM TO THE CABLE HOLDER
6. WALL PENETRATION SHALL BE WITH WALL SLEEVE COMPATIBLE W/ LINER AND RESILIENT SEAL BOOT OR NON SHRINK GROUT FOR GRAVITY OR MODULAR SEAL FOR FORCE MAINS.
7. REFER TO FIGURE WW-12-3 FOR PUMP OPERATING LEVELS

DUPLEX LIFT STATION
SECTION VIEW

FIGURE WW-12-2

POLK COUNTY UTILITIES, FLORIDA

OCTOBER, 2015

DESCRIPTION	SYMBOL	DIMENSION	ELEVATION
THICKNESS OF WALL (8" MIN.)	A		—
DIAMETER OF WET WELL (6' MIN.)	B		—
WIDTH OF BOTTOM FILLET	C	SEE NOTE 1	—
C/L TO C/L OF PUMPS	D	SEE NOTE 1	—
LENGTH OF PUMP ACCESS OPENING	E	SEE NOTE 1	—
WIDTH OF PUMP ACCESS OPENING	F	SEE NOTE 1	—
BASE ELBOW TO EDGE OF PIT	G	SEE NOTE 1	—
TOP OF WET WELL	T	—	
FINISHED GRADE	U	—	
INVERT OF GRAVITY PIPE	P	—	
FLOOR OF WET WELL	Z	—	
SEASONAL HIGH WATER ELEVATION (SEE NOTE 3)	SH	—	

NOTE:

1. PER PUMP MANUFACTURER'S REQUIREMENTS

2. TOP OF PUMP STATION SHALL BE NO LOWER THAN THE 25 YEAR FLOOD 24 HOUR ELEVATION. THE BOTTOM OF STATION CONTROL AND ELECTRICAL BOXES SHALL BE NO LOWER THAN THE 100 YEAR 24-HOUR FLOOD ELEVATION.

3. SEASONAL HIGH GROUND WATER ELEVATION 'SH' SHALL BE CONSIDERED THE SAME AS THE TOP OF WET WELL ELEVATION.

DESCRIPTION	SYMBOL	TRANSMITTER ELEVATION	FLOAT ELEVATION
VALVE HIGH-HIGH LEVEL ALARM	I		
HIGH LEVEL ALARM	J		
LAG PUMP ON	L		----
LEAD PUMP ON	M		----
BOTH PUMPS OFF	N		----
LOW LEVEL ALARM	O		

DUPLEX LIFT STATION DIMENSIONS AND ELEVATIONS TABLE	FIGURE WW-12-3
POLK COUNTY UTILITIES, FLORIDA	OCTOBER, 2015

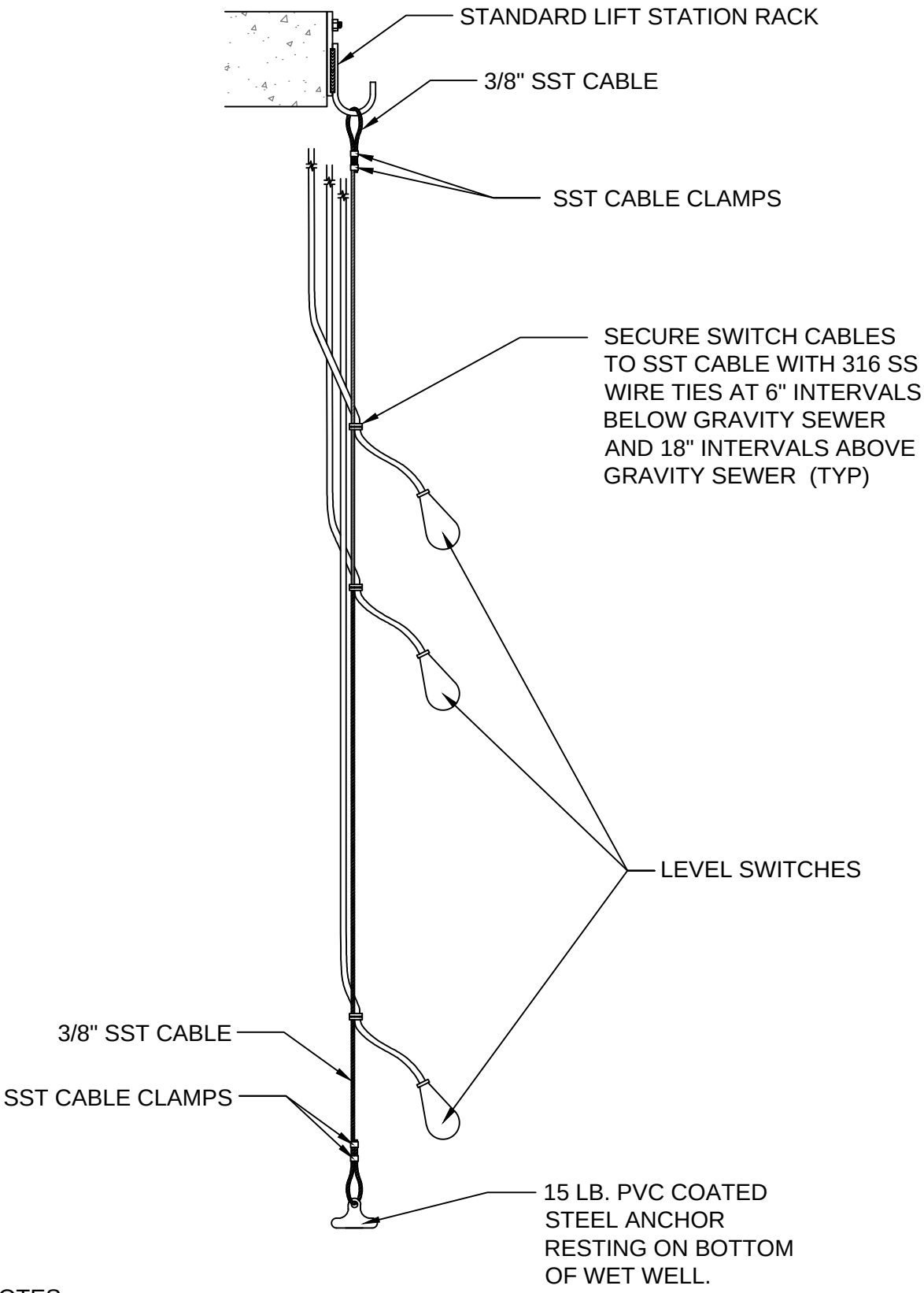

NOTES:

1. HANG FROM STANDARD LIFT STATION RACK

TYPICAL FLOAT TYPE LEVEL SWITCH INSTALLATION	FIGURE WW-12-4
POLK COUNTY UTILITIES, FLORIDA	SEPTEMBER, 2014

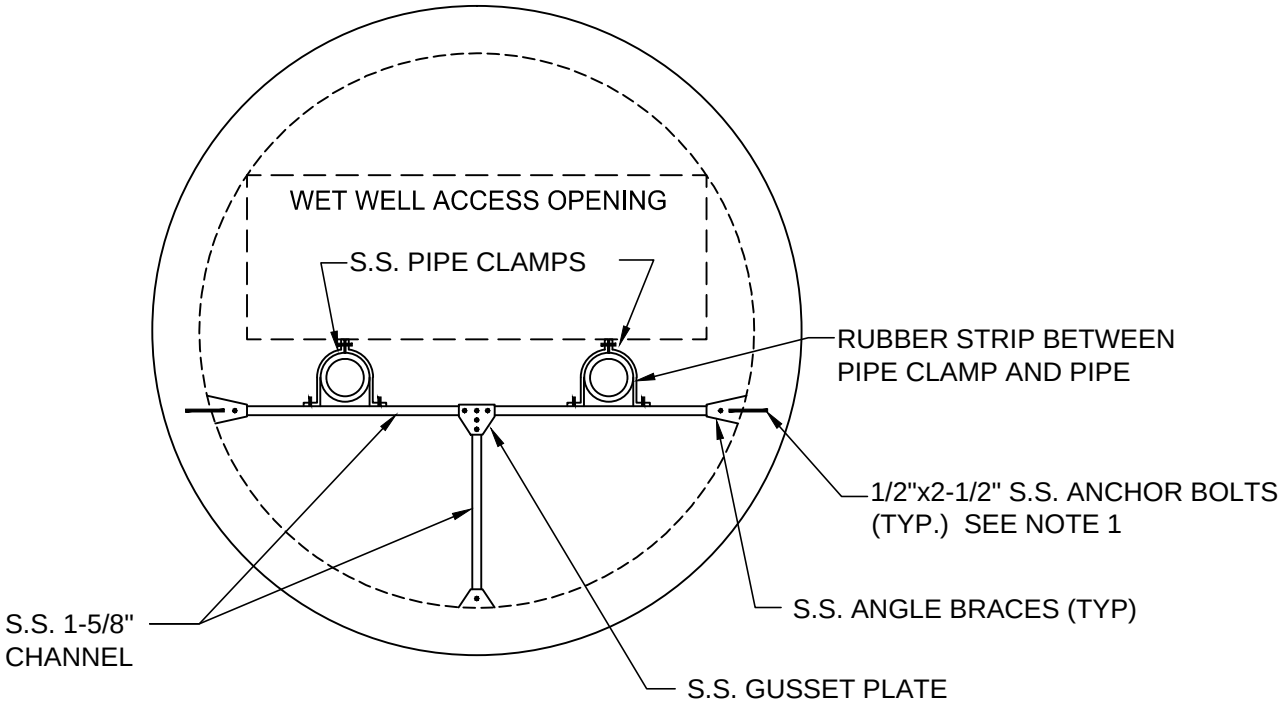

NOTE:

1. BOND ANCHOR BOLTS USING HIGH STRENGTH ANCHORING EPOXY FOR CONCRETE.

TYPICAL LIFT STATION **HDPE PIPE BRACING**	**FIGURE** **WW-12-5**
POLK COUNTY UTILITIES, FLORIDA	**OCTOBER, 2015**

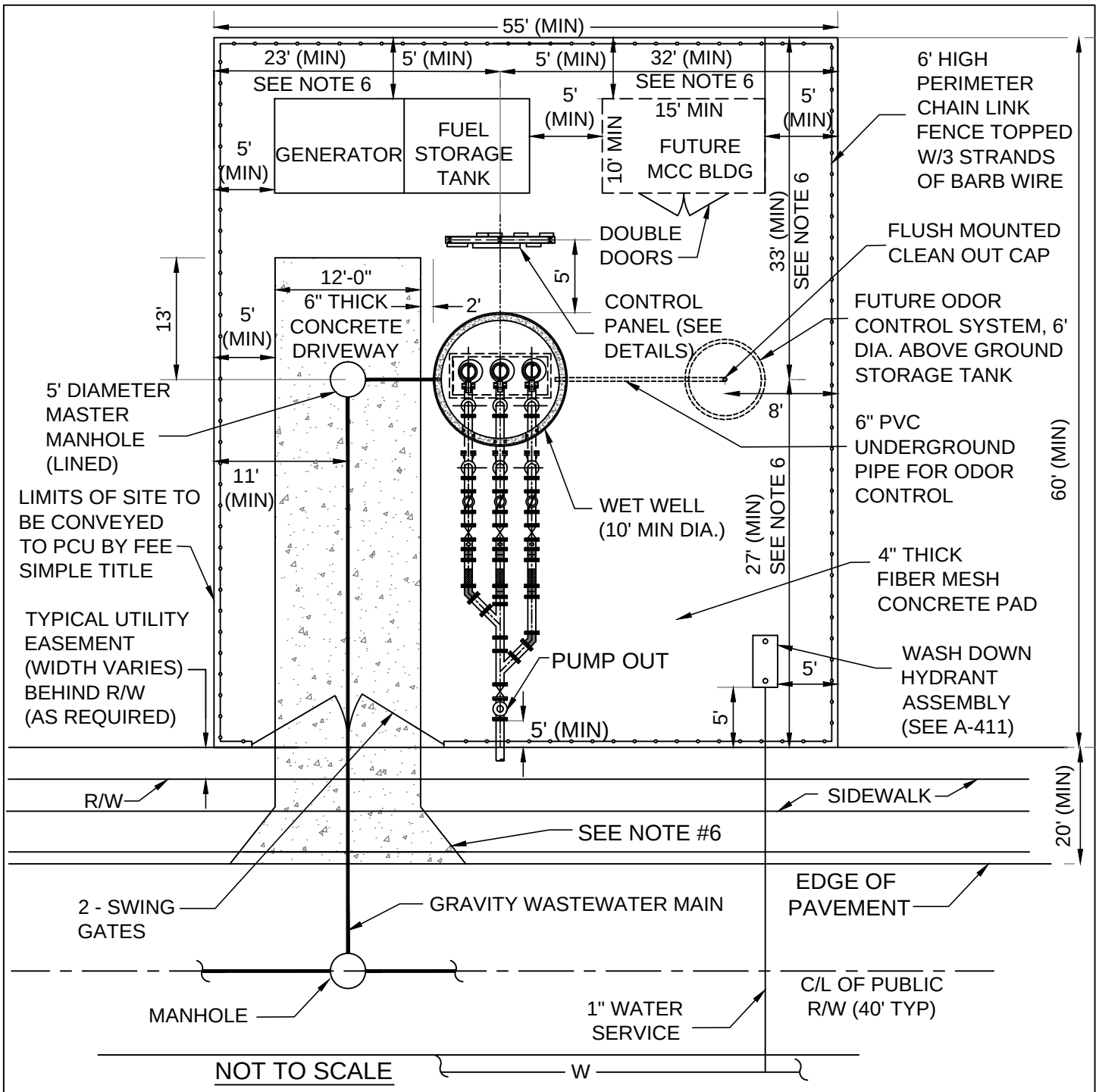

NOTES:

1. WET WELL OPENINGS SHALL BE PROVIDED WITH FALL PREVENTION DEVICES AS SPECIFIED IN THE " APPROVED MATERIALS CHECK LIST".
2. FENCING MAY BE REPLACED WITH OPTIONAL CONCRETE MASONRY WALL (SEE FIGURE WW-17-1 + 2)
3. SLOPE OF STATION PAD AND DRIVEWAY SHALL BE 1/8" PER 1' DOWN SLOPE (1.0%), NO LESS OR MORE, FROM CENTER OF WET WELL TO PERIMETER OF STATION.
4. ENGINEER SHALL PROVIDE A SCALED (1" = 20' MIN) SITE SPECIFIC DETAIL.
5. MINIMUM DISTANCE BETWEEN FENCE AND ALL INSTALLED EQUIPMENT SHALL BE 5.0'.
6. THIS DIMENSION SHALL INCREASE 1.0' FOR EACH FOOT OF ADDITIONAL WET WELL DEPTH OVER 15'.
7. USE OF 20' RADIUS OR 5' FLARE OF DRIVEWAY AT ROADWAY SHALL BE DETERMINED BY THE SURROUNDING DRIVEWAY GEOMETRY.
8. MINIMUM DRIVEWAY LENGTH FROM LIFT STATION'S GATES TO THE ADJACENT ROADWAY'S EDGE OF PAVEMENT OR BACK OF CURB SHALL BE 20' ALONG LOW TRAFFIC VOLUME TWO LANE RESIDENTIAL ROADWAYS. DRIVEWAY LENGTH ALONG ALL OTHER ROADWAYS SHALL NOT BE LESS THAN 45'.

TRIPLEX LIFT STATION (TYPICAL) **SITE PLAN**	**FIGURE** **WW-13**
POLK COUNTY UTILITIES, FLORIDA	**DECEMBER, 2010**

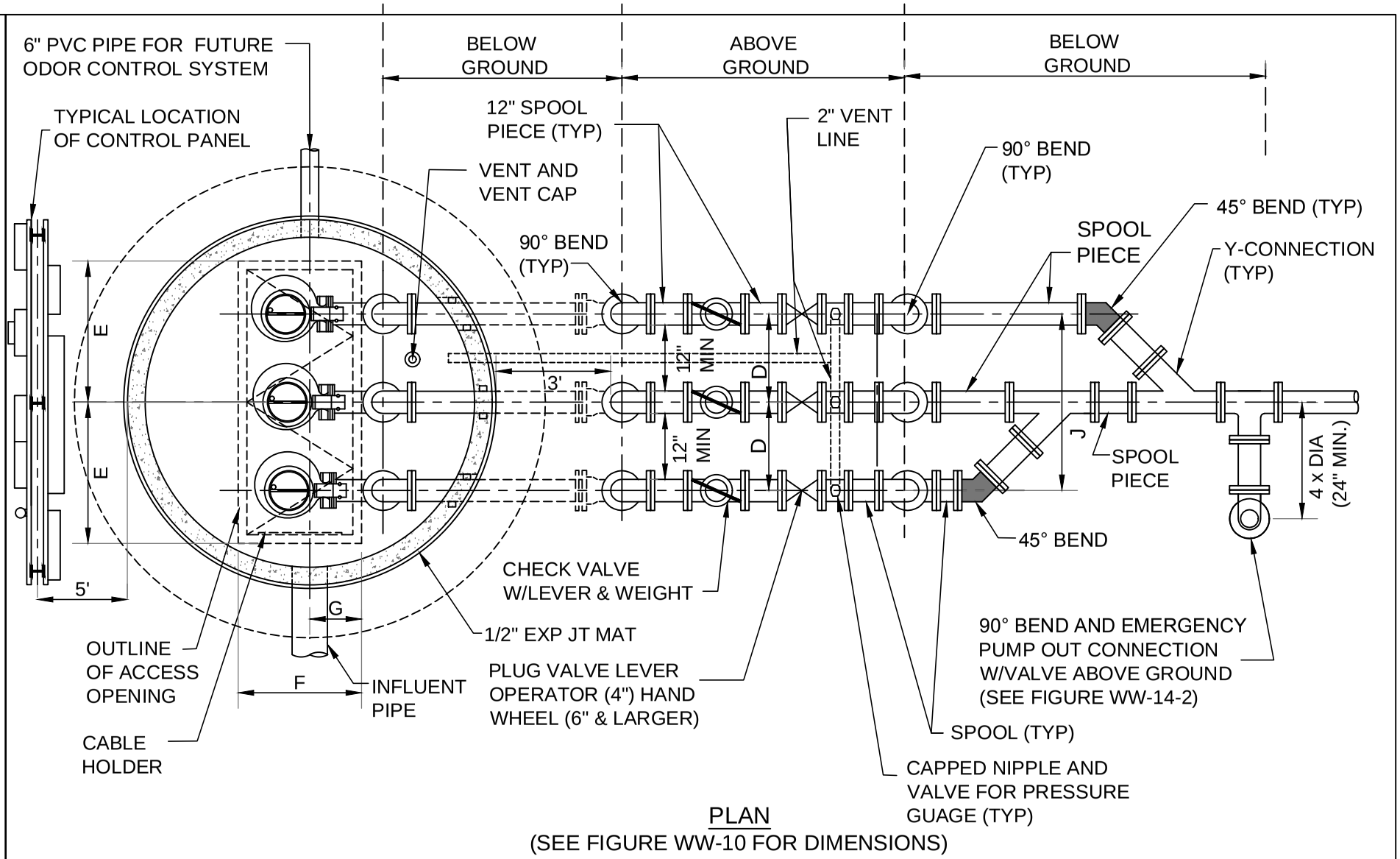

PLAN
(SEE FIGURE WW-10 FOR DIMENSIONS)

NOTES :

1. WET WELL OPENINGS SHALL BE PROVIDED WITH FALL PREVENTION DEVICES AS SPECIFIED IN THE " APPROVED MATERIALS CHECK LIST".
2. PROVIDE SUFFICIENT CLEARANCE BETWEEN PARALLEL PIPES TO REMOVE CHECK VALVE ARMS WITHOUT REMOVING VALVE.
3. BACKFILL UNDER AND WITHIN 10' OF WET WELL CENTER SHALL BE PLACED IN 12" LIFTS AND COMPACTED TO 95% MAX DENSITY PER AASHTO T-180, DENSITY TEST RESULTS SHALL BE PROVIDED TO INSPECTOR PRIOR TO PLACEMENT OF SLAB.
3. HATCH DOOR HINGES FOR WET WELL ACCESS ARE TO BE LOCATED ON OPPOSITE SIDE FROM GUIDERAILS.

TRIPLEX LIFT STATION
PLAN VIEW

POLK COUNTY UTILITIES, FLORIDA

FIGURE WW-14-1

DECEMBER, 2010

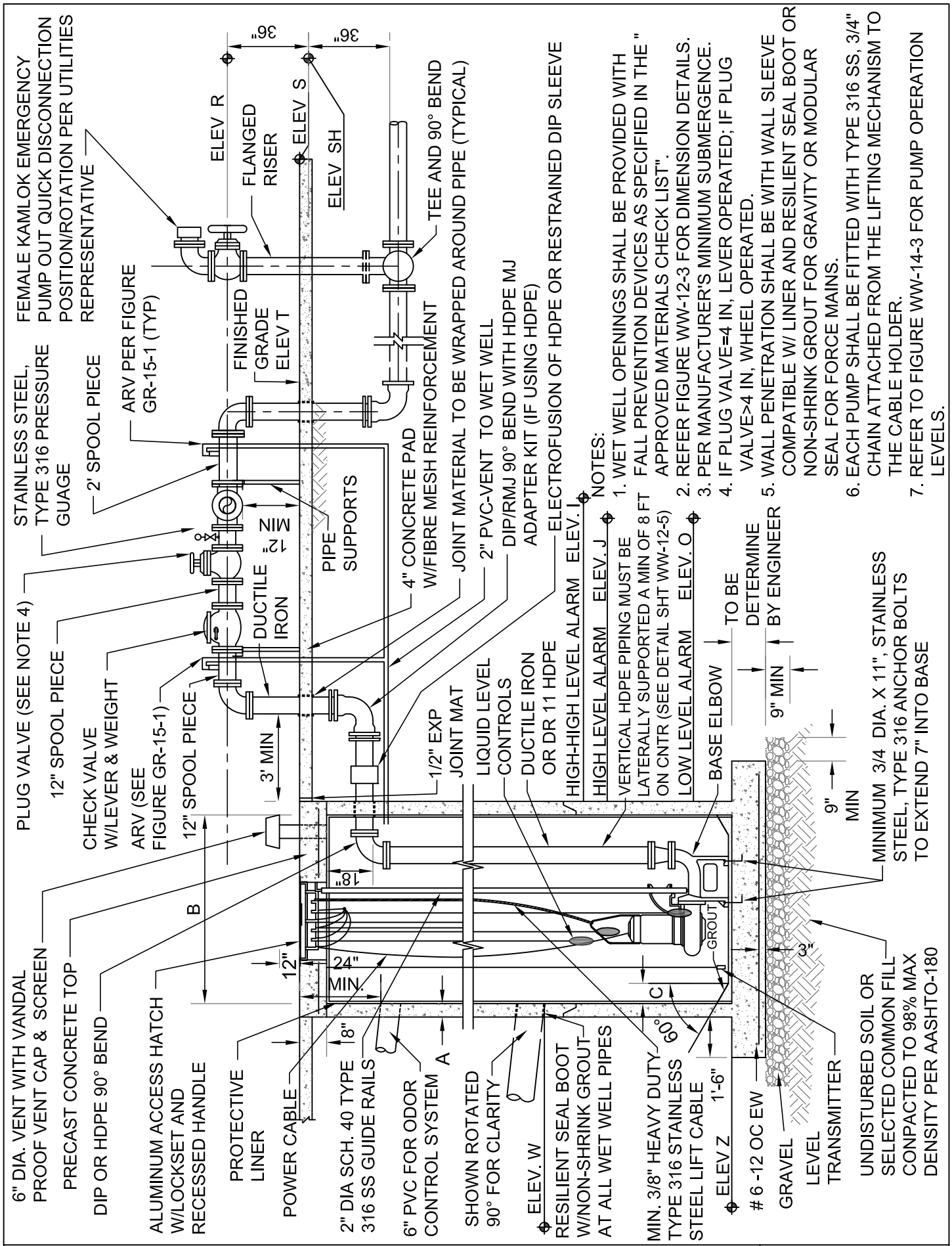

NOTES:

1. WET WELL OPENINGS SHALL BE PROVIDED WITH FALL PREVENTION DEVICES AS SPECIFIED IN THE " APPROVED MATERIALS CHECK LIST".
2. REFER FIGURE WW-12-3 FOR DIMENSION DETAILS.
3. PER MANUFACTURER'S MINIMUM SUBMERGENCE.
4. IF PLUG VALVE=4 IN, LEVER OPERATED; IF PLUG VALVE>4 IN, WHEEL OPERATED.
5. WALL PENETRATION SHALL BE WITH WALL SLEEVE COMPATIBLE W/ LINER AND RESILIENT SEAL BOOT OR NON-SHRINK GROUT FOR GRAVITY OR MODULAR SEAL FOR FORCE MAINS.
6. EACH PUMP SHALL BE FITTED WITH TYPE 316 SS, 3/4" CHAIN ATTACHED FROM THE LIFTING MECHANISM TO THE CABLE HOLDER.
7. REFER TO FIGURE WW-14-3 FOR PUMP OPERATION LEVELS.

TRIPLEX LIFT STATION (ABOVE GROUND PIPING) SECTION VIEW	**FIGURE WW-14-2**
POLK COUNTY UTILITIES, FLORIDA	**AUGUST, 2016**

DESCRIPTION	SYMBOLS	DIMENSIONS	ELEVATIONS
THICKNESS OF WALL 8" (MIN)	A		----
DIAMETER OF WET WELL 10' (MIN)	B		----
WIDTH OF BOTTOM FILLET	C	SEE NOTE 1	----
C/L TO C/L OF PUMPS	D	SEE NOTE 1	----
LENGTH OF PUMP ACCESS	E	SEE NOTE 1	----
WIDTH OF PUMP ACCESS	F	SEE NOTE 1	----
BASE ELBOW TO EDGE OF PIT	G	SEE NOTE 1	----
CENTERLINE OF HEADER PIPE	R	----	
TOP OF WELL	S	----	
FINISH GRADE	T	----	
INVERT OF GRAVITY PIPE	P	----	
FLOOR OF WET WELL	Z	----	
SEASONAL HIGH WATER ELEVATION (SEE NOTE 3)	SH	----	

NOTE :

1. THESE DIMENSIONS SHALL BE SET AS PER PUMP MANUFACTURERS REQUIREMENTS.
2. TOP OF PUMP STATION SHALL BE NO LOWER THAN THE 25 YEAR 24 HOUR FLOOD ELEVATION. THE BOTTOM OF STATION CONTROL AND ELECTRICAL BOXES SHALL BE NO LOWER THAN THE 100 YEAR 24 HOUR FLOOD ELEVATION.
3. SEASONAL HIGH GROUND WATER ELEVATION (SH) SHALL BE CONSIDERED THE SAME AS THE TOP OF WET WELL ELEVATION.

DESCRIPTION	SYMBOL	TRANSMITTER ELEVATION	FLOAT ELEVATION
VALVE HIGH-HIGH LEVEL ALARM	I		
HIGH LEVEL ALARM	J		
LAG-LAG PUMP ALARM	L-1		----
LAG PUMP ON	L-2		----
LEAD PUMP ON	M		----
BOTH PUMPS OFF	N		----
LOW LEVEL ALARM	O		

TRIPLEX LIFT STATION **DIMENSIONS AND ELEVATIONS TABLE**	**FIGURE** **WW-14-3**
POLK COUNTY UTILITIES, FLORIDA	**OCTOBER, 2015**

GAUGE/DIAPHRAGM ASSEMBLY

NTS

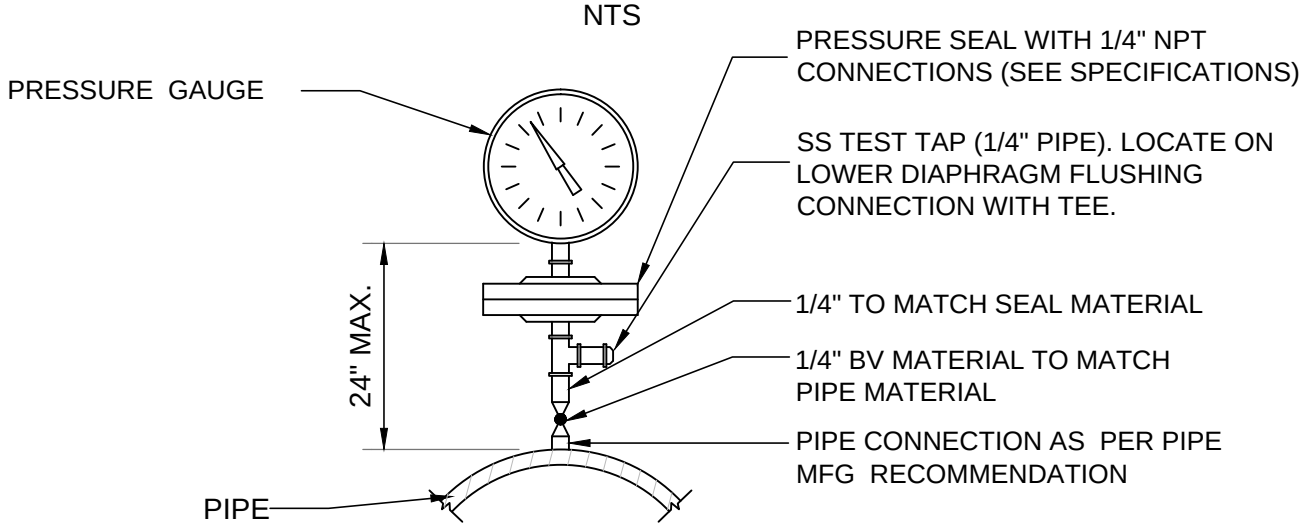

FLANGE PIPE SUPPORT DETAIL

NTS

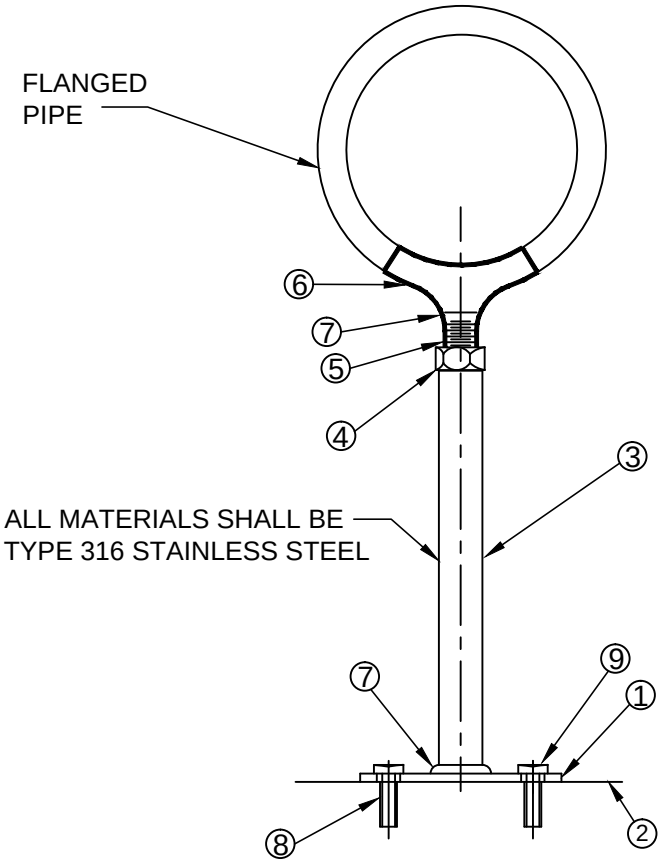

LEGEND

1. BASE
2. CONCRETE PAD
3. SUPPORT COLUMN
4. HEIGHT ADJUSTMENT NUT
5. SUPPORT SHAFT - THREADED
6. MANUFACTURED PIPE SUPPORT CRADLE
7. WELD
8. ANCHOR (4-TYP)
9. LAG BOLT (4-TYP)

SECTION VIEW

NTS

PIPE SUPPORT AND GAUGE / DIAPHRAGM ASSEMBLY (TYPICAL)	**FIGURE WW-15**
POLK COUNTY UTILITIES, FLORIDA	**DECEMBER, 2010**

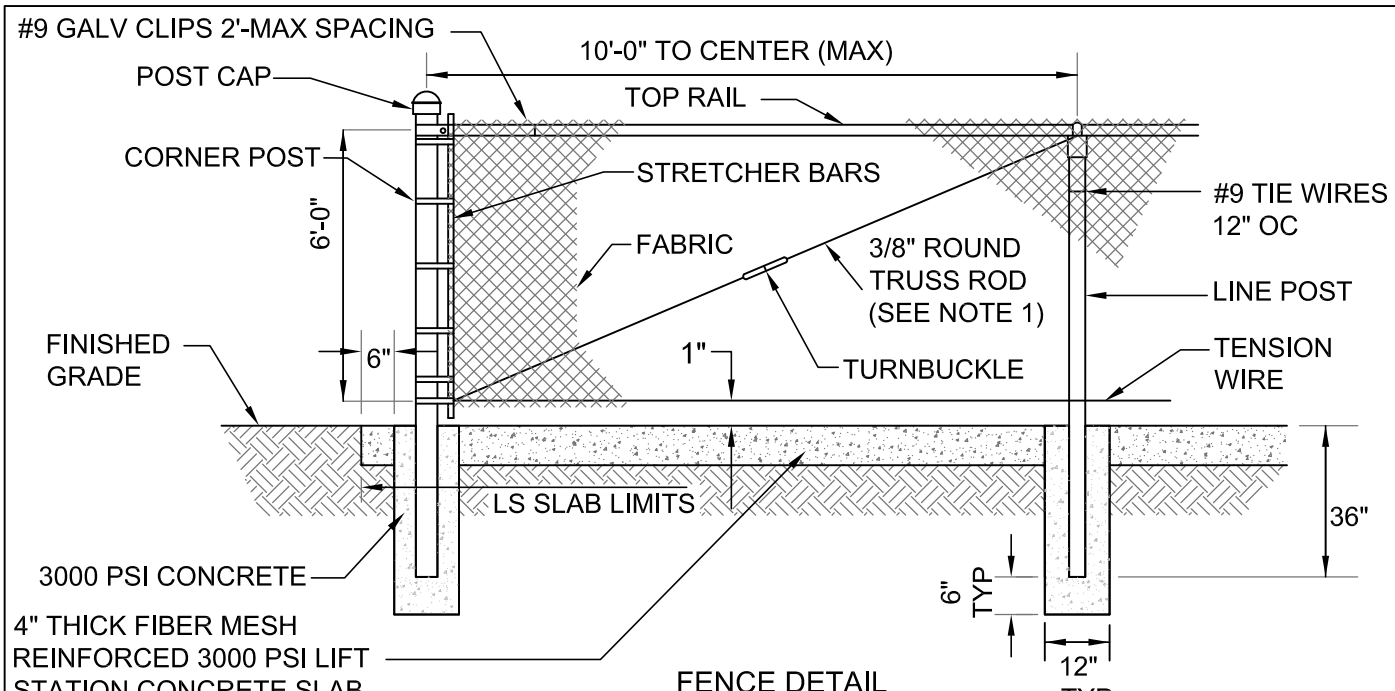

FENCE DETAIL

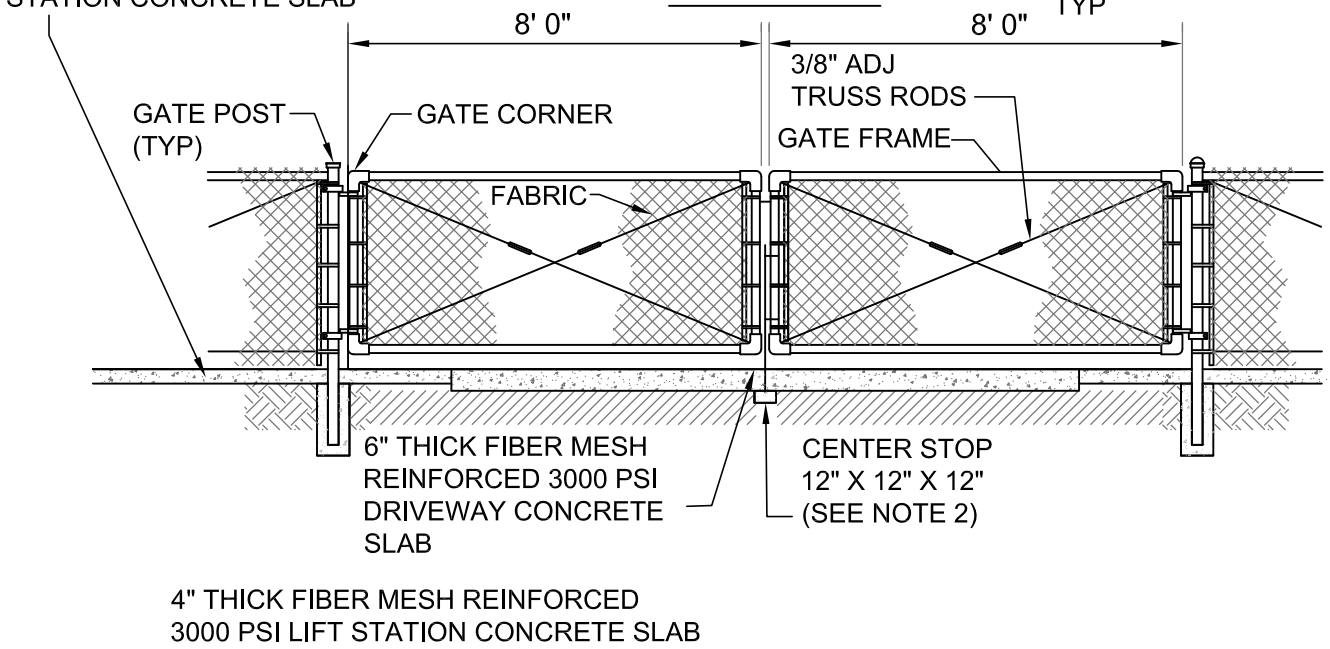

DOUBLE SWING GATE DETAIL

NOTES:

1. TRUSS RODS ARE REQUIRED FOR EACH GATE SECTION AND THE FIRST SPAN ON EACH SIDE OF A GATE AND EACH SIDE OF A CORNER POST ONLY.
2. GATE SHALL BE CAPABLE OF BEING LOCKED SECURELY WITH MINIMUM SPACE BETWEEN GATES.
3. FENCING SHALL BE BLACK, FACTORY APPLIED VINYL CLAD.
4. THREE STRANDS OF BARBED WIRE SHALL BE INSTALLED ON TOP ONLY IF APPROVED BY PCU. 2' FENCE AND GATE POST CAP EXTENSION SHALL BE INCORPORATED INTO FENCE AND/OR GATE DESIGN ACCORDINGLY. BARBED WIRE SHALL BE INSTALLED VERTICALLY AT GATE.
5. ELECTRO-MECHANICAL LOCKING DEVICE MAY BE USED IF REQUIRED BY PCU AND IN ACCORDANCE WITH APPROVED MATERIALS CHECK LIST.

CHAIN LINK FENCE (TYPICAL)	FIGURE WW-16
POLK COUNTY UTILITIES, FLORIDA	DECEMBER, 2012

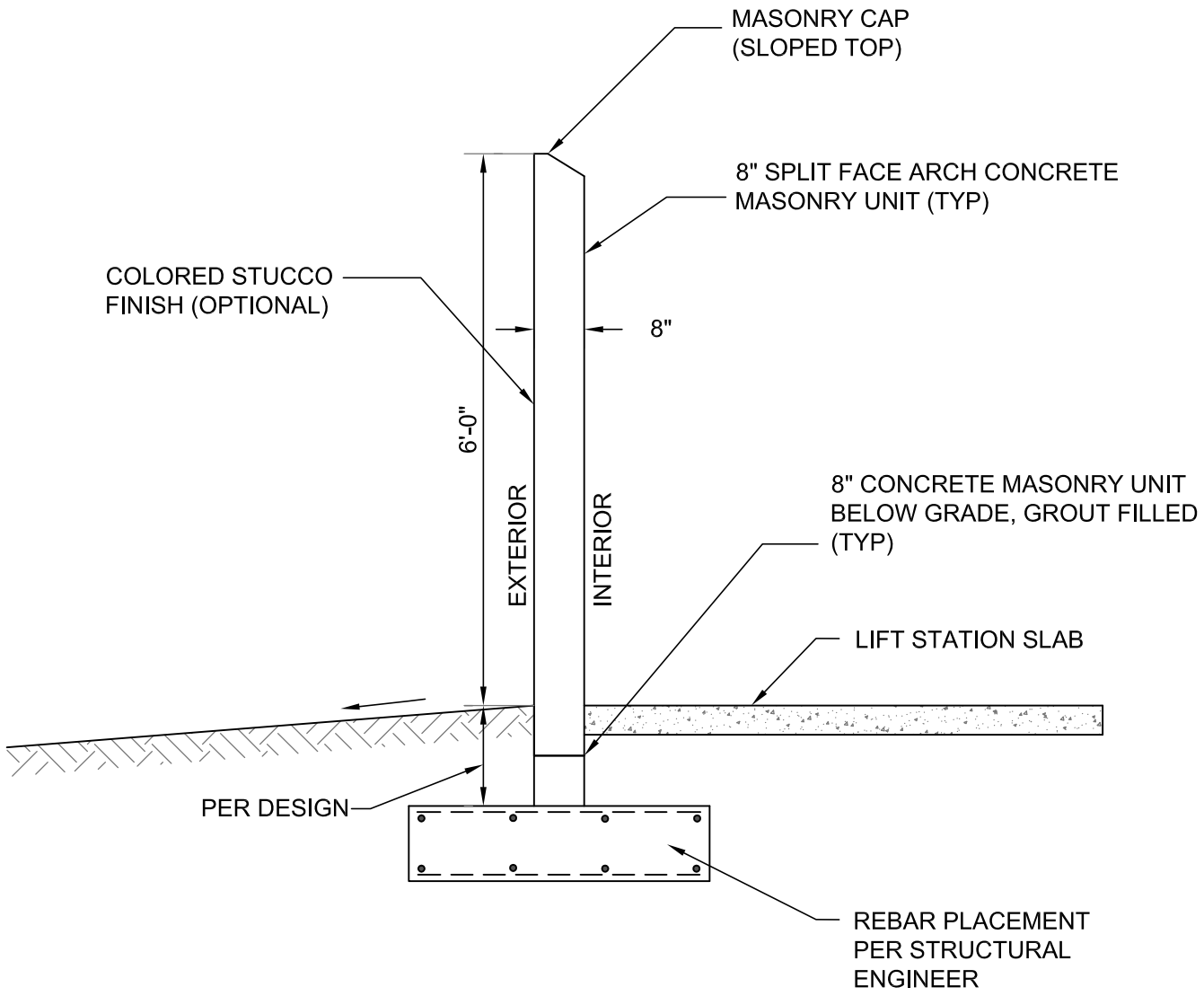

SECTION VIEW

NOTES:

1. ENGINEER TO PROVIDE SIGNED AND SEALED STRUCTURAL WALL DESIGN. WALL PERMIT REQUIRED BY THE POLK COUNTY BUILDING DEPARTMENT.

LIFT STATION WALL (TYPICAL) **SECTION VIEW**	**FIGURE** **WW-17-1**
POLK COUNTY UTILITIES, FLORIDA	**OCTOBER, 2013**

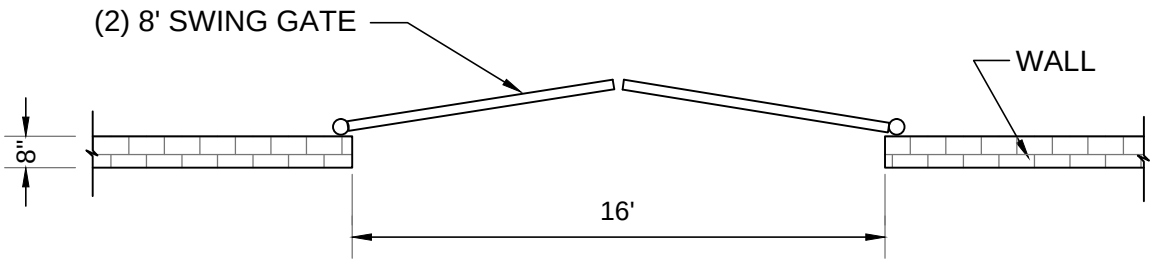

PLAN VIEW

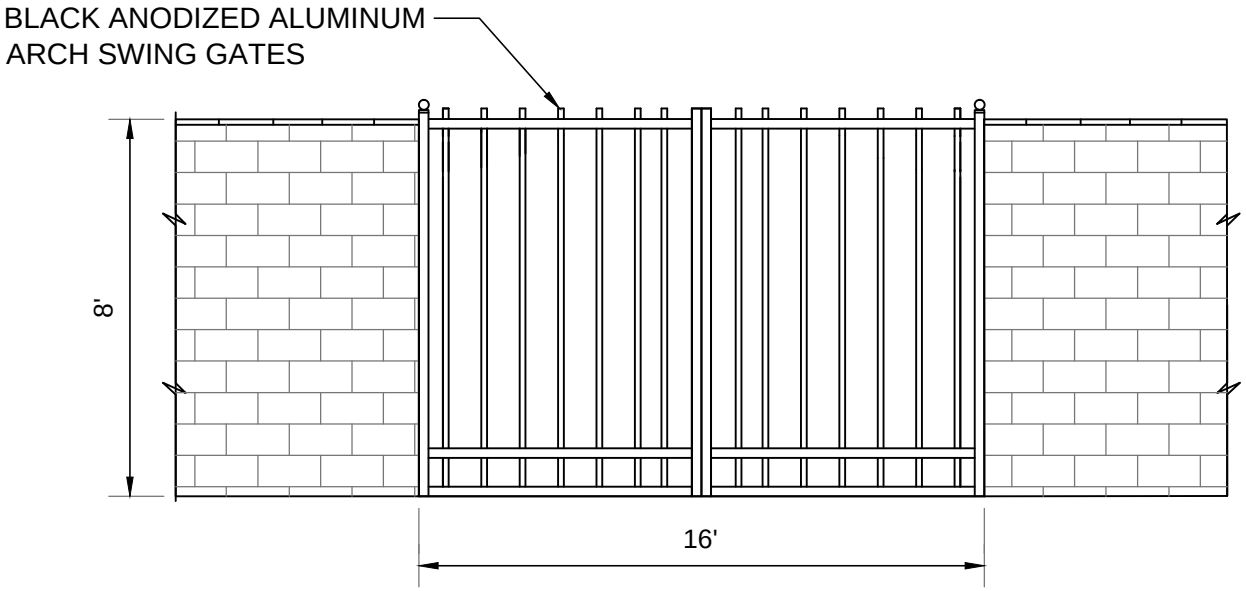

GATE ELEVATION

NOTE:

1. A ROLLER TYPE GATE MAY BE SUBSTITUTED TOR SWING GATES AS APPROVED OR REQUESTED BY PCU.

CANTILEVER SWING GATE (TYPICAL)	**FIGURE WW-17-2**
POLK COUNTY UTILITIES, FLORIDA	**DECEMBER, 2010**

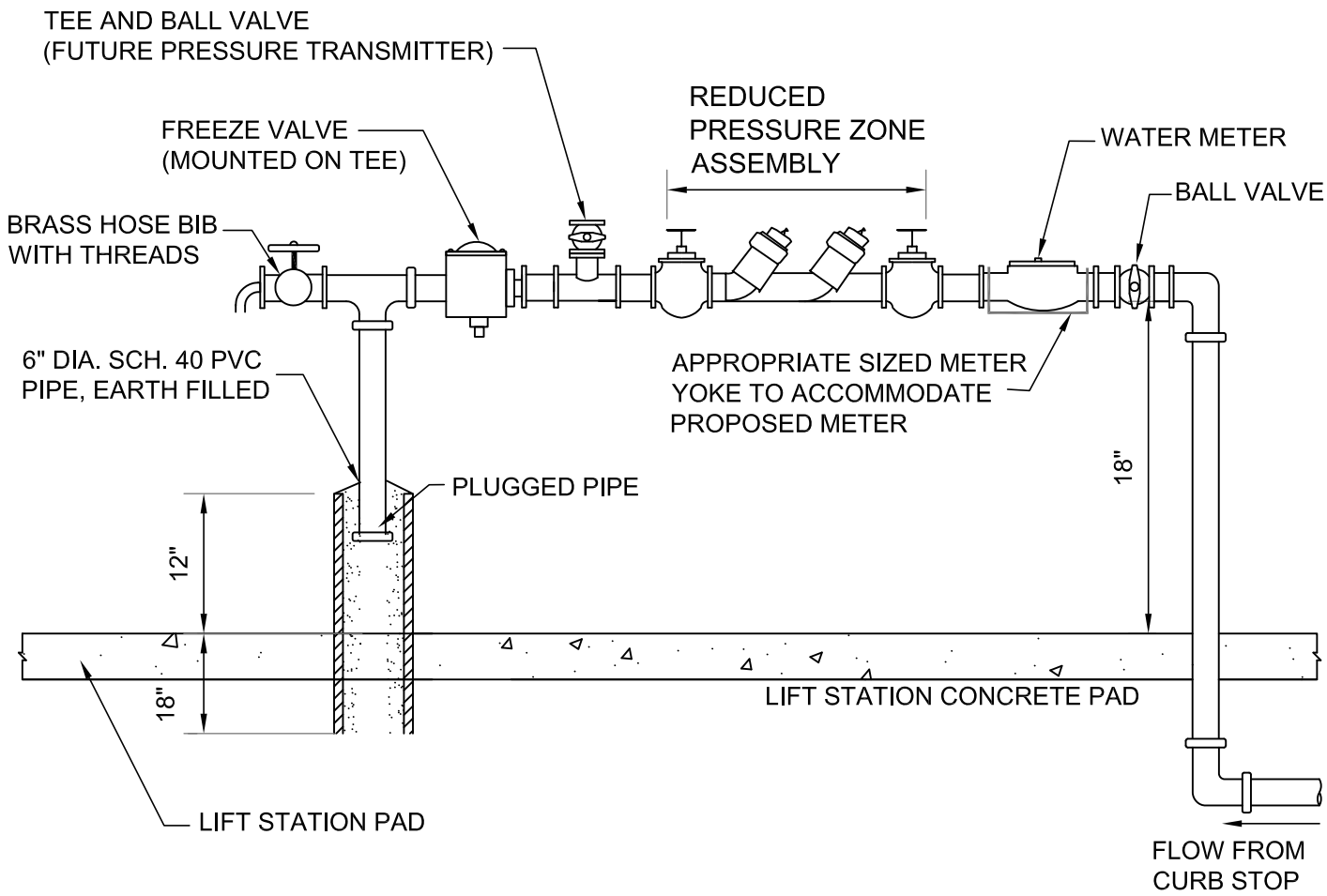

NOTES:

1. ALL ABOVE GROUND PIPING AND APPURTENANCES SHALL BE 3/4" SCH 40 BRASS PIPE.

2. AN APPROVED REDUCED PRESSURE ZONE ASSEMBLY SHALL BE SELECTED IN ACCORDANCE WITH PCU'S " APPROVED CROSS CONNECTION CONTROL ASSEMBLY LIST"

3. UNDERGROUND PIPING SHALL CONFORM TO POTABLE WATER SERVICE LATERAL SPECIFICATIONS FOR PE PIPE.

4. ALL ABOVE GRADE PIPING SHALL RECEIVE TWO COATS OF BLUE EPOXY PAINT.

5. METER SHALL BE FURNISHED AND INSTALLED BY PCU.

6. THE CONTRACTOR SHALL FURNISH AND INSTALL ENTIRE ASSEMBLY, INCLUDING METER YOKE.

LIFT STATION WASH DOWN ASSEMBLY (TYPICAL)	**FIGURE WW-18**
POLK COUNTY UTILITIES, FLORIDA	**SEPTEMBER, 2014**

THIS PAGE IS INTENTIONALLY BLANK

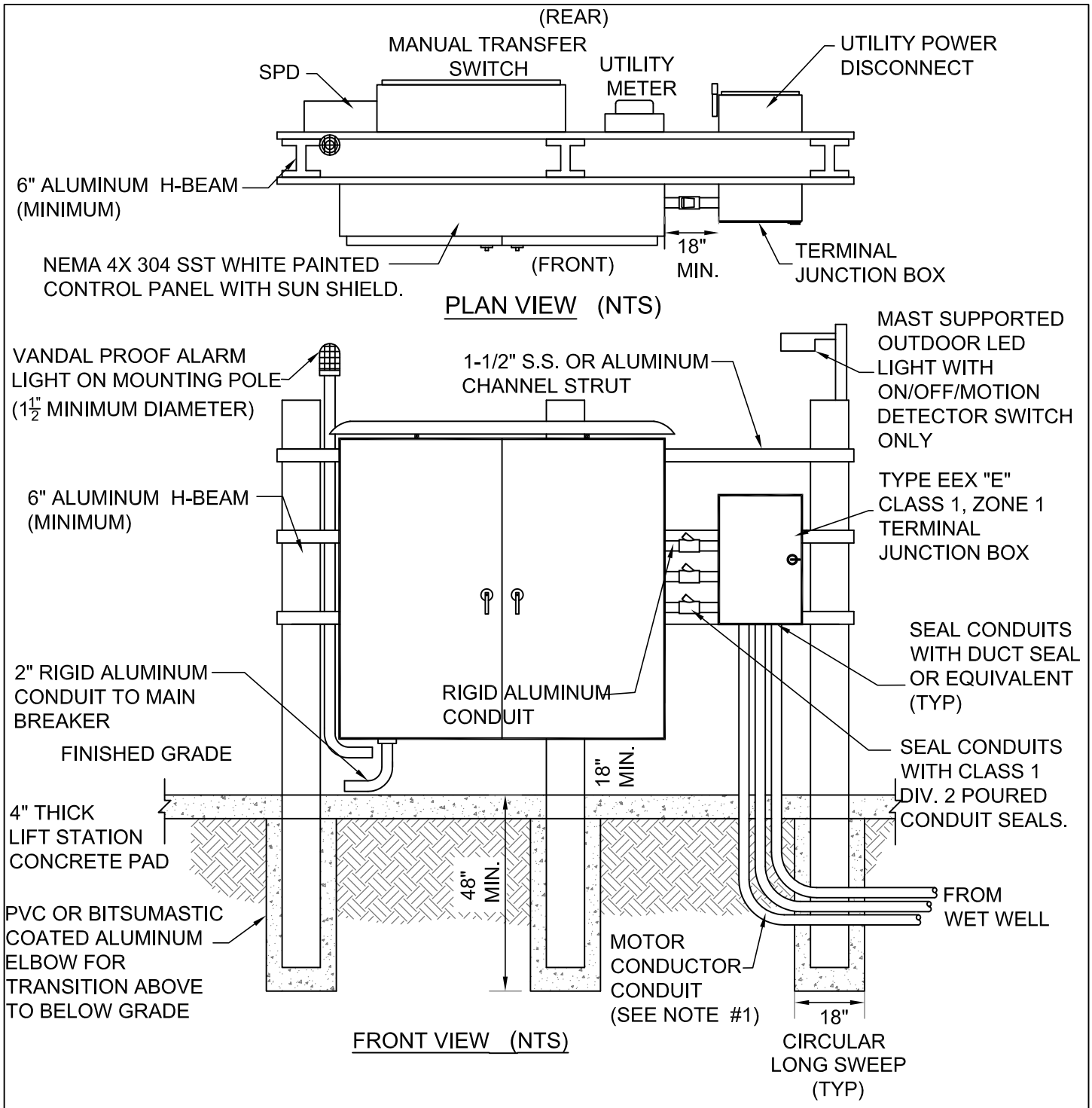

PANEL INSTALLATION NOTES:

1. PUMP MOTOR CONDUIT SHALL BE SIZE TO ACCOMMODATE 40% CONDUIT FILL. MINIMUM CONDUIT SIZE TO BE 2" SCH 80 PVC.
2. POWER SUPPLY SHALL BE 3 PHASE AND UNDERGROUND FROM THE LIFT STATION METER BASE TO THE 3-PHASE SOURCE.
3. THE STATION NAME, PCU I.D. NUMBER, AND ADDRESS SHALL BE AFFIXED TO THE FRONT OF THE PANEL CABINET AS SPECIFIED BY PCU.
4. ALL MOUNTING HARDWARE & BRACKETS SHALL BE 316 STAINLESS STEEL.
5. THE ENGINEER SHALL INCREASE THE SIZE OF THE VERTICAL SUPPORT MEMBERS DEPENDING ON WIND LOAD REQUIREMENTS.

LIFT STATION CONTROL PANEL FRONT VIEW	**FIGURE WW-20-1**
POLK COUNTY UTILITIES, FLORIDA	**SEPTEMBER, 2014**

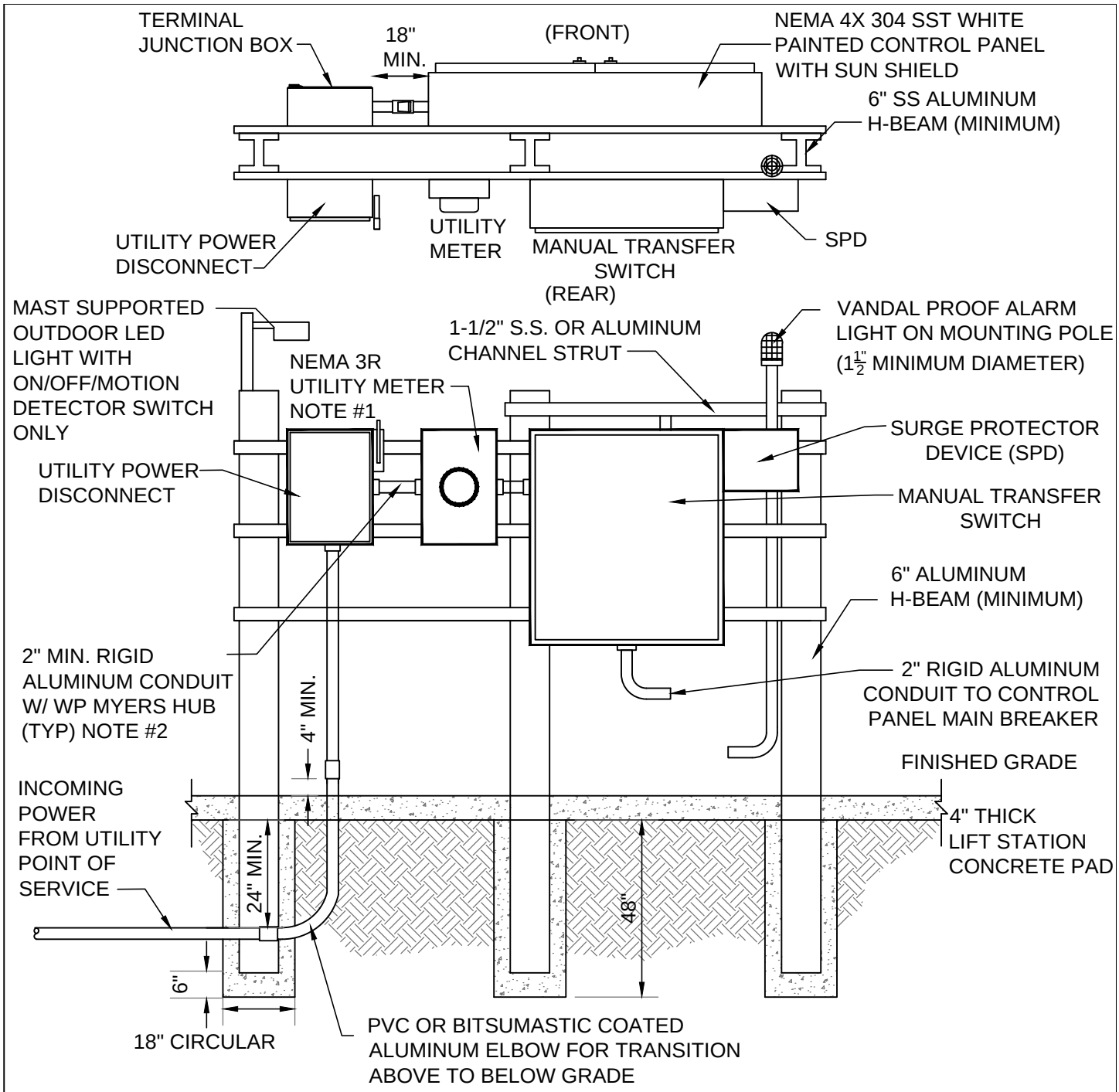

FRONT VIEW
(NTS)

PANEL INSTALLATION NOTES:

1. PROVIDE METER BASE AS REQUIRED BY THE ELECTRICAL UTILITY.
2. POWER SUPPLY SHALL BE 3 PHASE AND UNDERGROUND FROM THE LIFT STATION PANEL TO THE 3-PHASE SOURCE.
3. ALL MOUNTING HARDWARE & BRACKETS SHALL BE 316 STAINLESS STEEL.
4. THE ENGINEER SHALL INCREASE THE SIZE OF THE VERTICAL SUPPORT MEMBERS DEPENDING ON WIND LOAD REQUIREMENTS.
5. PROVIDE DISCONNECT BEFORE UTILITY METER WHERE REQUIRED BY THE LOCAL ELECTRIC UTILITY.

LIFT STATION CONTROL PANEL REAR VIEW	**FIGURE WW-20-2**
POLK COUNTY UTILITIES, FLORIDA	**OCTOBER, 2015**

THIS PAGE IS INTENTIONALLY BLANK

	FIGURE WW-21
POLK COUNTY UTILITIES, FLORIDA	**DECEMBER, 2010**

LEGEND

AH _ ALARM HORN
AL _ ALARM LIGHT
ASB _ ALARM SILENCE BUTTON
ATS _ ALTERNATOR SWITCH
CCB _ CONTROL CIRCUIT BREAKER
DPDT _ DOUBLE POLE DOUBLE THROW
DRB _ DUPLEX RECEPTACLE BREAKER
ECB _ EMERGENCY CIRCUIT BREAKER
ETM _ ELAPSED TIME METER
F _ FUSE
FB _ FUSE BLOCK
FL _ FLASHER
FR _ FLOAT REGULATOR
GFDR _ GROUND FAULT DUPLEX RECEPTACLE
GR _ GENERATOR RECEPTACLE
HOA _ HAND-OFF-AUTO SELECTOR SWITCH
MB _ MOTOR BREAKER
MCB _ MAIN CIRCUIT BREAKER
MS _ MOTOR STARTER
OL _ OVERLOAD
PL _ PILOT LIGHT
PM _ PHASE MONITOR
R _ RELAY
RL _ RUNNING LIGHT
SCB _ SCADA CIRCUIT BREAKER
TB _ TERMINAL BLOCK
TTS _ THERMAL TERMINAL STRIP
TVSS _ TRANSIENT VOLTAGE SURGE SUPPRESOR
XFMR _ TRANSFORMER

ELECTRICAL LEGEND	**FIGURE WW-22**
POLK COUNTY UTILITIES, FLORIDA	**DECEMBER, 2010**

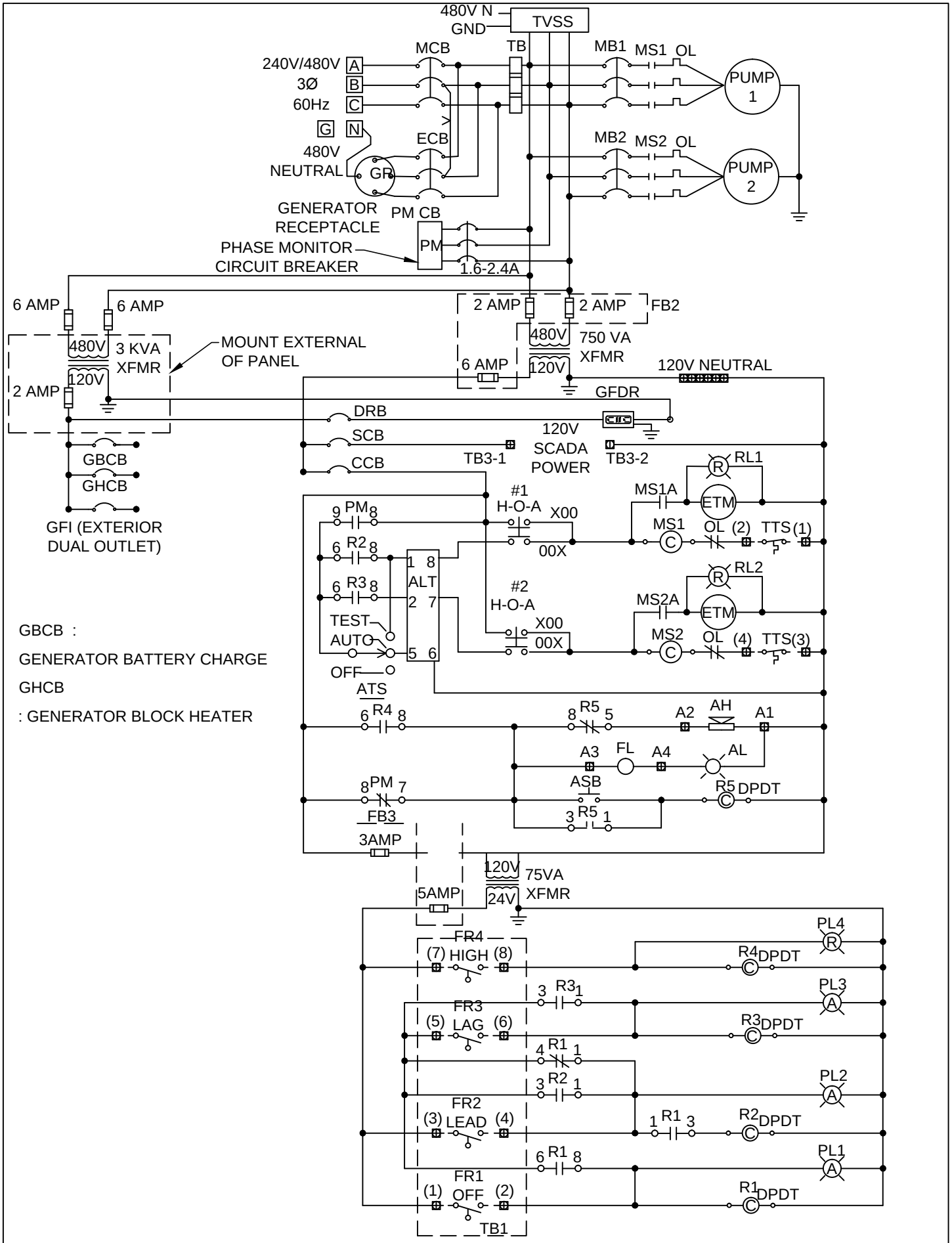

DUPLEX PUMP CONTROL SCHEMATIC (240V/480V)	FIGURE WW-23
POLK COUNTY UTILITIES, FLORIDA	DECEMBER, 2010

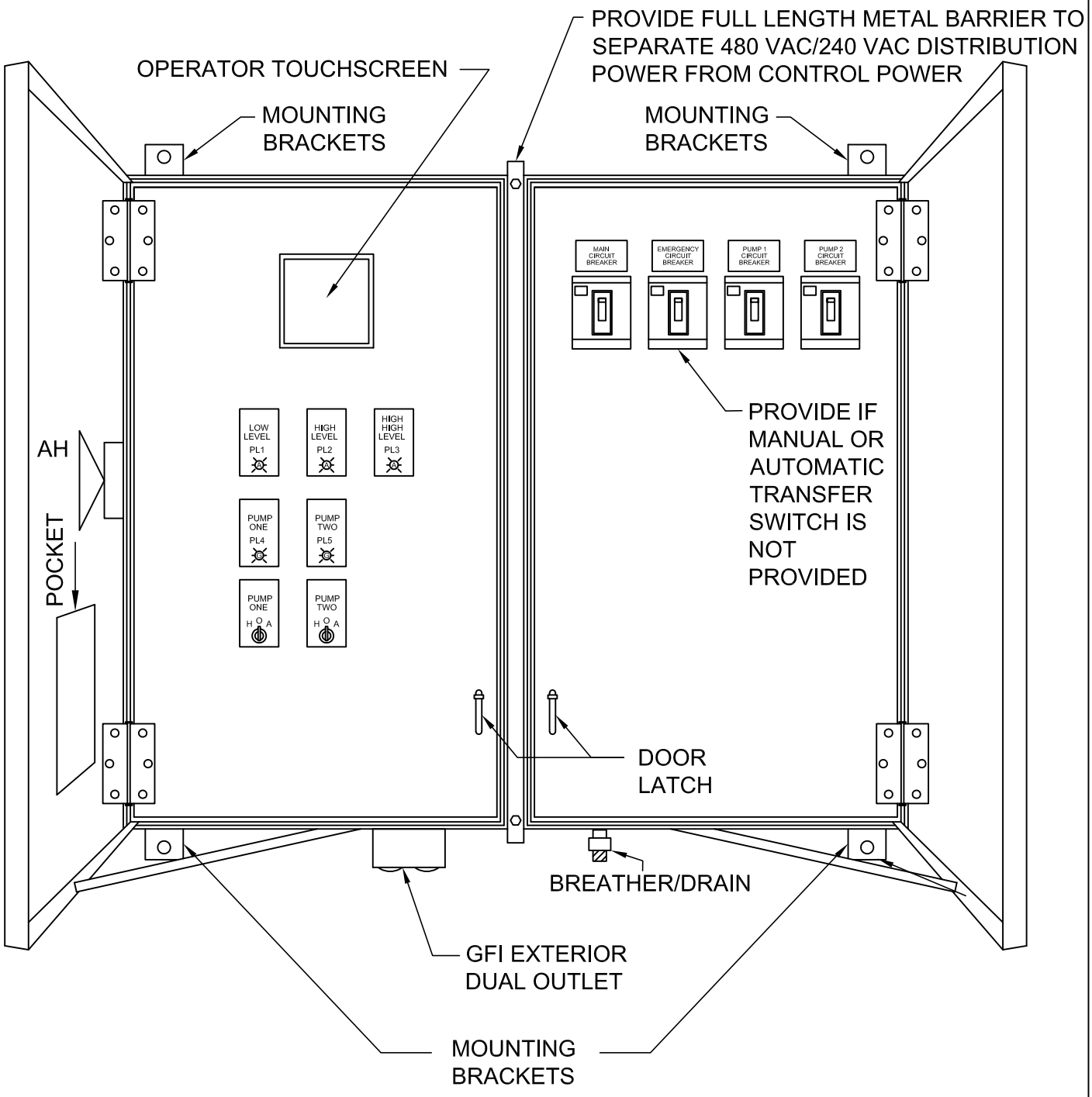

NOTES:

1. DEADFRONT LAYOUT NEMA TYPE 4X WHITE PAINTED 304 SS ENCLOSURE W/CONTINUOUS HINGE. ALL HARDWARE TYPE 316 SS TYPICAL, ACTUAL LAYOUT MAY VARY WITH HORSEPOWER.
2. SIZE LANEL AND MODIFY LAYOUT AS REQUIRED FOR PANEL TYPE AND NUMBER OF PUMPS.
3. ALL CONTROL WIRE TO BE #14 AWG MINIMUM.
4. CONTROL PANEL SHALL BE UL LISTED AND LABELED.

DUPLEX CONTROL PANEL ENCLOSURE DEAD FRONT LAYOUT (TYPICAL)	**FIGURE WW-24**
POLK COUNTY UTILITIES, FLORIDA	**SEPTEMBER, 2014**

THIS PAGE IS INTENTIONALLY BLANK

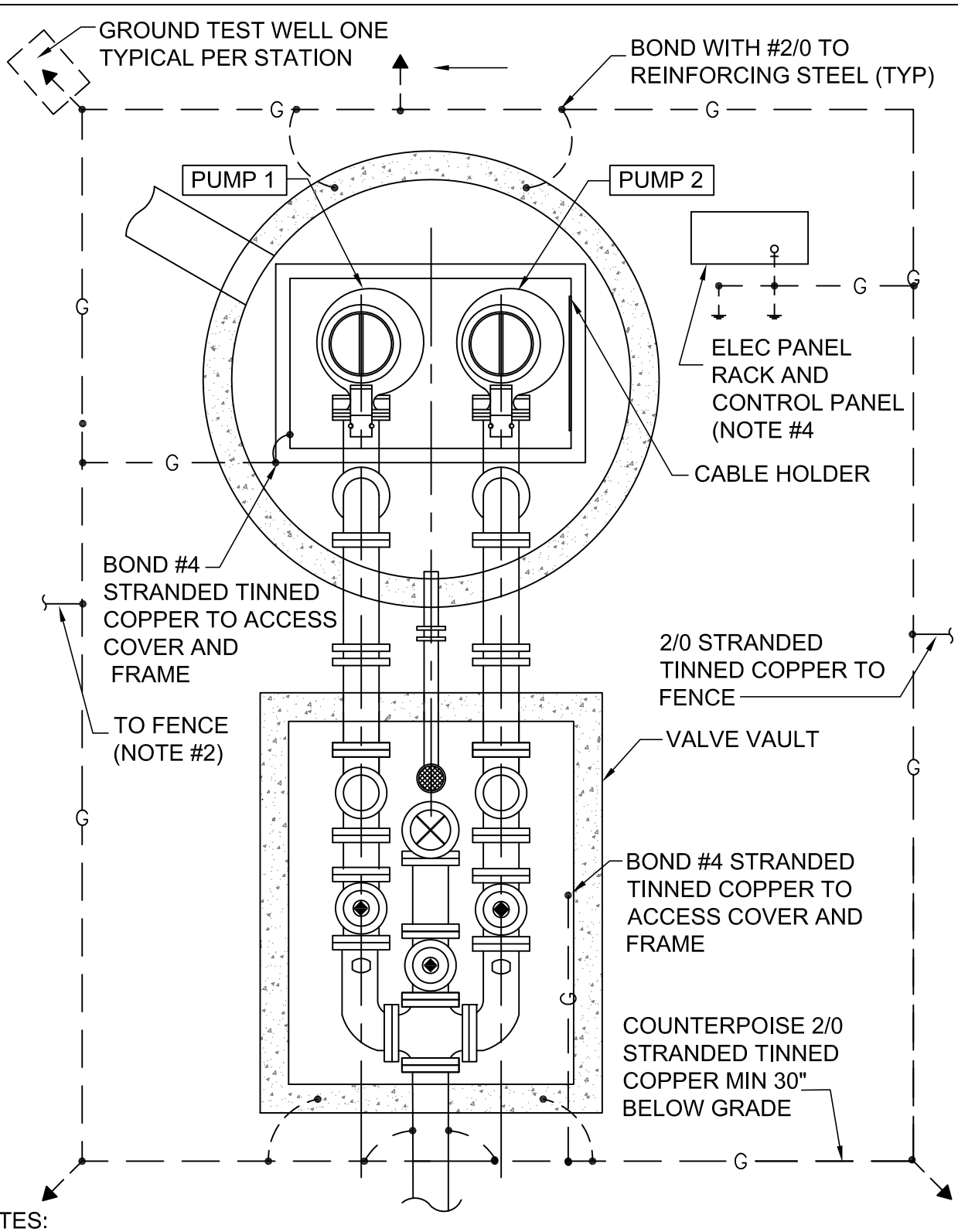

NOTES:

1. DETAIL IS GENERIC. SPECIFIC LOCATIONS OF EQUIPMENT MAY VARY.
2. TIE TO FENCE, MINIMUM 2 LOCATIONS. NOT REQUIRED WHERE BLOCK WALL OR WOOD FENCE IS INSTALLED.
3. PROVIDE EXOTHERMIC WELDS FOR ALL BELOW GRADE AND STRUCTURAL STEEL CONNECTIONS UNLESS NOTED OTHERWISE.
4. PROVIDE MINIMUM # 6 AWG XHHW INSULATED COPPER GROUND WIRE IN CONDUIR TO ALL ENCLOSURE BUS BARS FOR ENCLOSED GROUNDING. BOND MINIMU #2 TINNED COPPER GROUND WIRE TO ALL ELECTRICAL SUPPORT RACKS.

LIFT STATION GROUNDING (TYPICAL)	**FIGURE WW-26-1**
POLK COUNTY UTILITIES, FLORIDA	**SEPTEMBER, 2014**

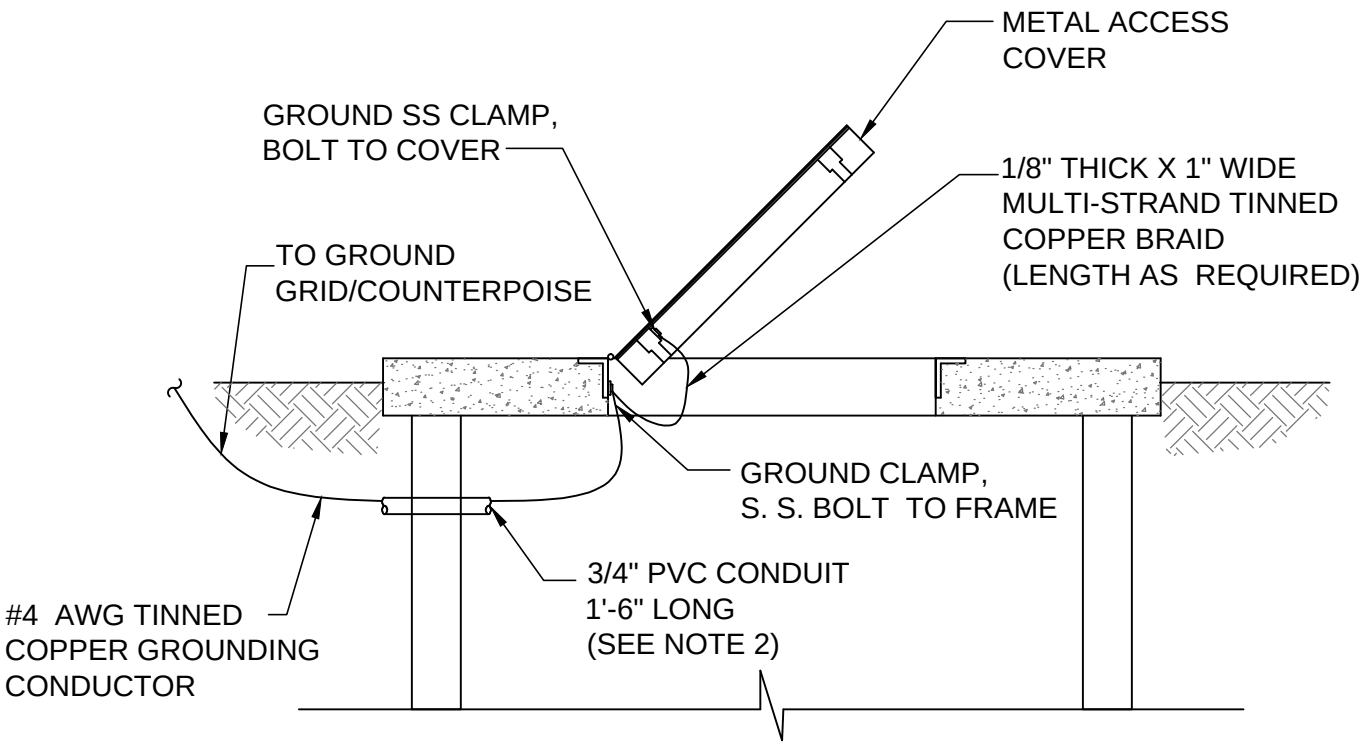

NOTES:

1. ON COVERS WITH MULTIPLE DOORS, PROVIDE BRAID FROM FRAME TO DOOR ON EACH DOOR PROVIDE WATERPROOF CAULKING WHERE GROUND CABLE AND CONDUIT PENETRATES WETWELL TO PREVENT INTRUSION OF GROUNDWATER AND ESCAPE OF VAPORS FROM WETWELL.
2. INSTALL GROUND WIRE SO THAT IT WILL NOT CROSS CLEAR OPENING OR PREVENT OR IMPEDE NORMAL METHOD OF REMOVING FLOATS OR PUMPS.

LIFT STATION COVER AND DOOR GROUNDING (TYPICAL)	**FIGURE WW-26-2**
POLK COUNTY UTILITIES, FLORIDA	**DECEMBER, 2010**

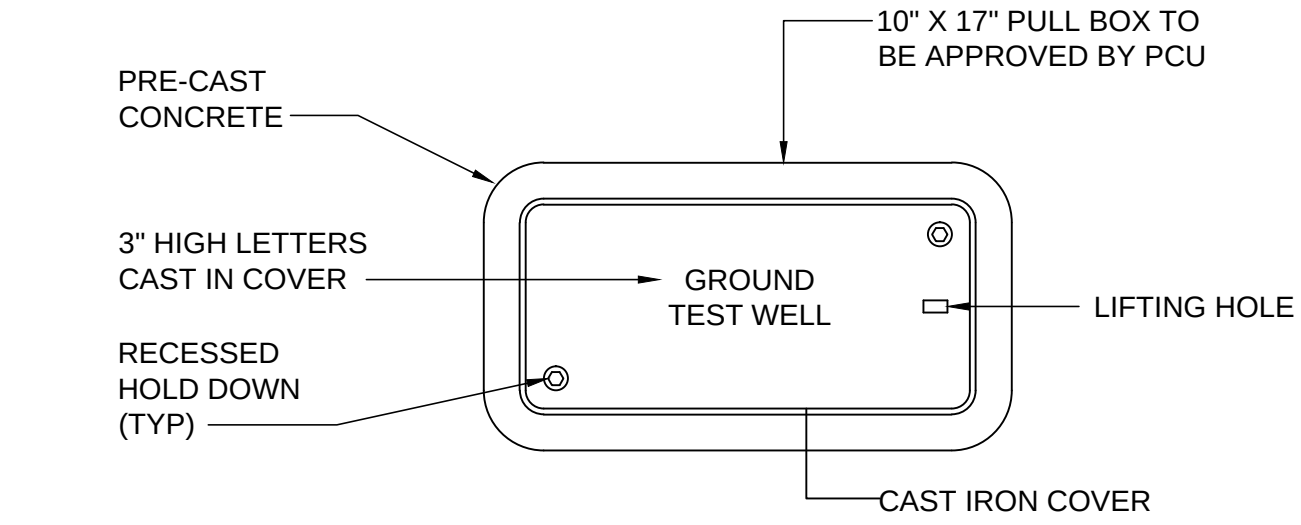

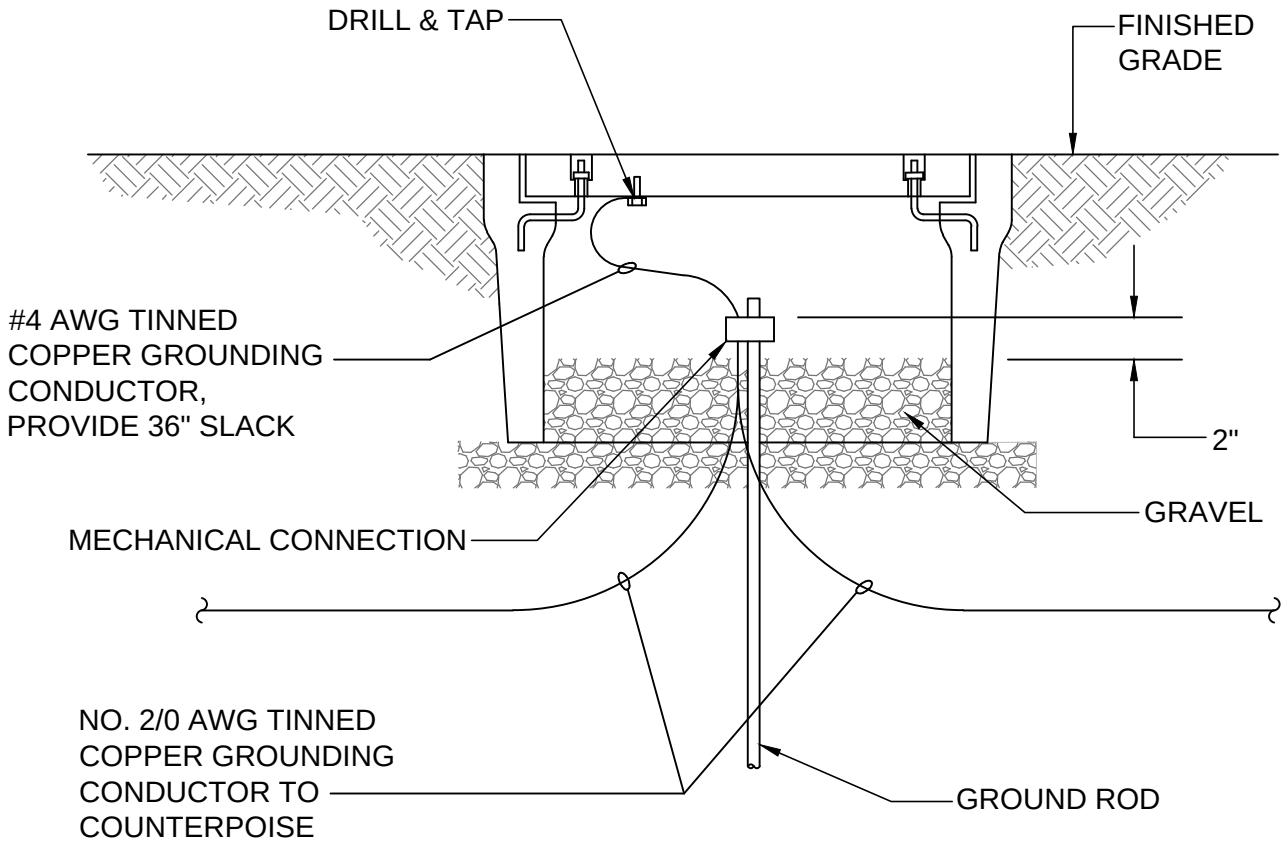

LIFT STATION GROUND TEST WELL	FIGURE WW-26-3
POLK COUNTY UTILITIES, FLORIDA	DECEMBER, 2010

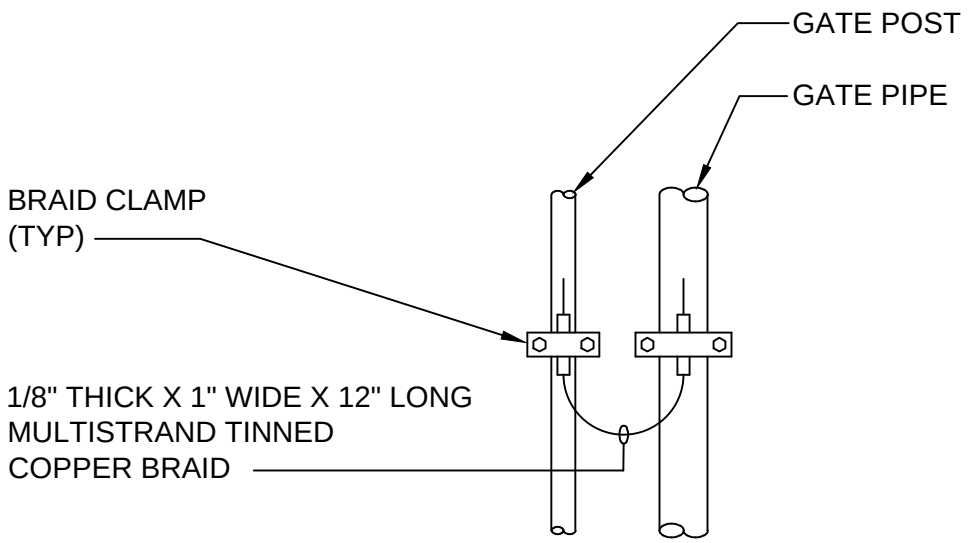

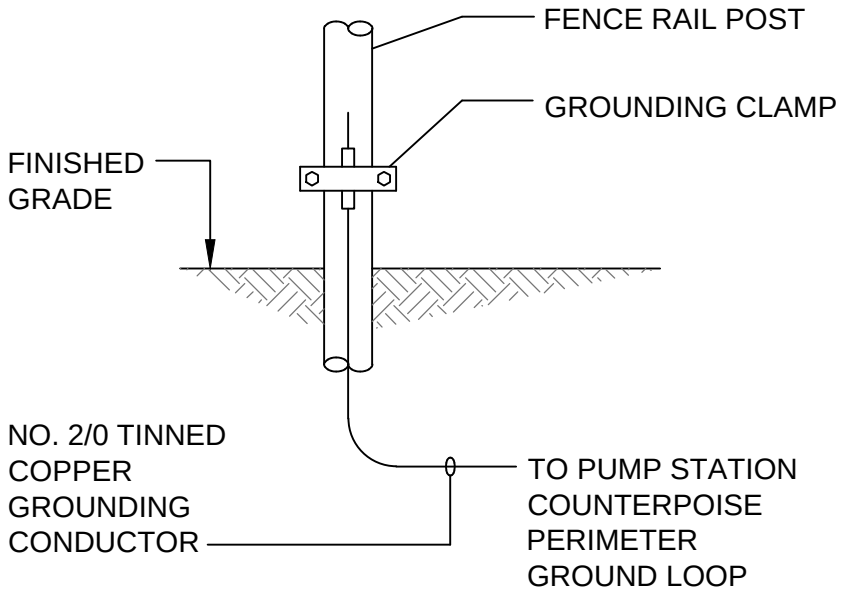

LIFT STATION FENCE POST GROUNDING (TYPICAL)	FIGURE WW-26-4
POLK COUNTY UTILITIES, FLORIDA	DECEMBER, 2010

THIS PAGE IS INTENTIONALLY BLANK

SCADA PRESSURE SENSOR WATER SERVICE	FIGURE WW-27
POLK COUNTY UTILITIES, FLORIDA	SEPTEMBER, 2014