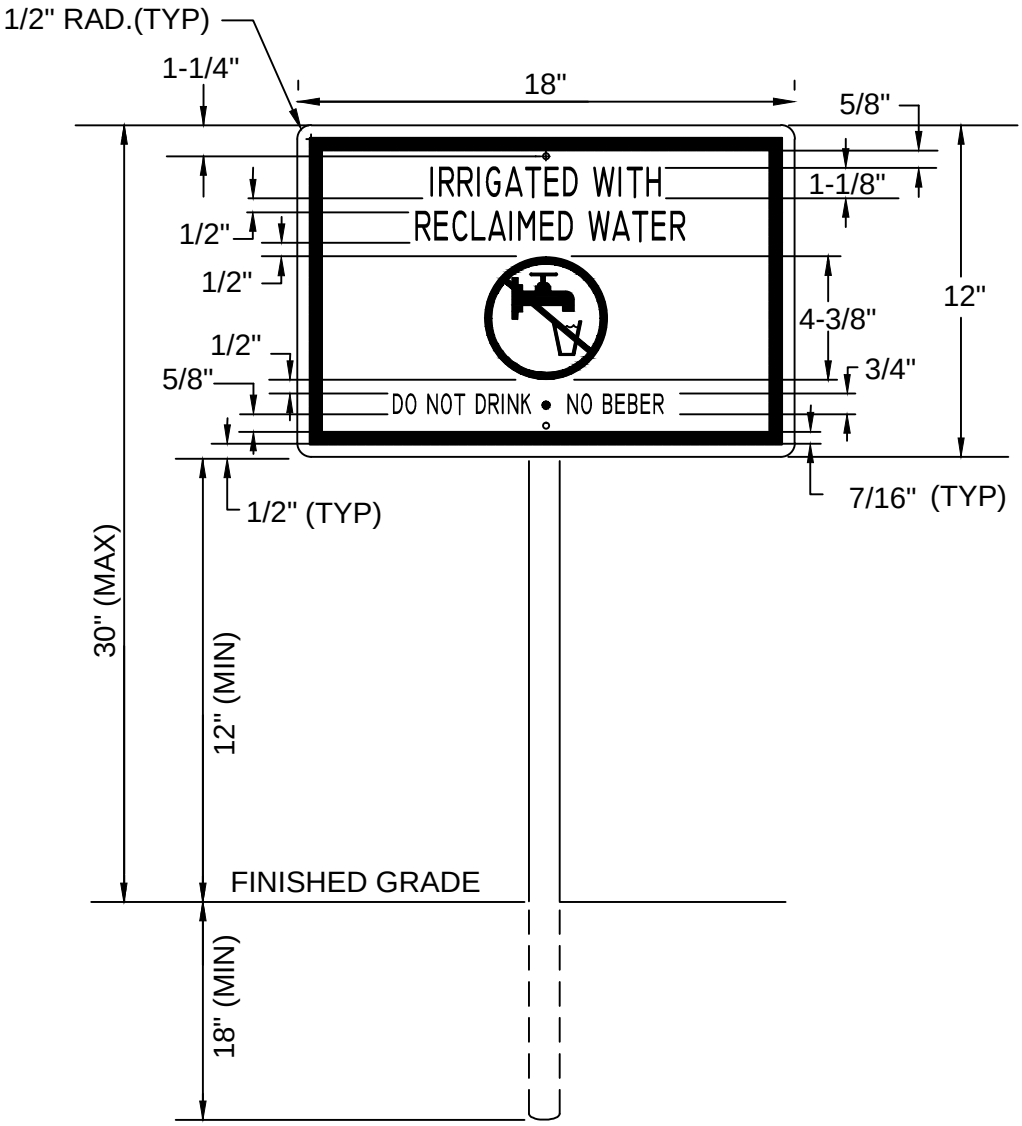

NOTES:

1. HEIGHT OF SIGN WILL DEPEND ON LOCATION AND SURROUNDING LANDSCAPE PLANT TYPES. IN ALL CASES, THE SIGN SHALL BE VISIBLE TO THE PUBLIC.
2. BACKGROUND SHALL BE WHITE, LETTERS SHALL BE PANTONE PURPLE 522C (HELVETICA, SWISS 721 COREL OR ACCEPTABLE EQUAL) AND BORDER SHALL BE PANTONE PURPLE 522C.
3. ENGINEERING GRADE REFLECTIVE MATERIALS SHALL BE USED.
4. SIGN MATERIAL SHALL BE OF 0.040 GAUGE ALUMINUM.
5. POST SHALL BE 2-3/8" OD ALUMINUM PIPE, HOT DIP GALVANIZED PER ASTM A-123. POST TO BE PROVIDED BY CONTRACTOR/CUSTOMER.
6. MOUNTING HARDWARE SHALL BE STAINLESS STEEL.
7. SIGNS SHALL BE PLACED BY THE CONTRACTOR IN ACCORDANCE WITH CHAPTER 62-610 "ACCESS CONTROL AND ADVISORY SIGNS", FAC, THE COUNTY APPROVED ENGINEERING PLANS AND/OR AS APPROVED BY PCU .

RECLAIMED WATER SIGNAGE "DO NOT DRINK WATER"	**FIGURE RW-01**
POLK COUNTY UTILITIES, FLORIDA	**DECEMBER, 2010**

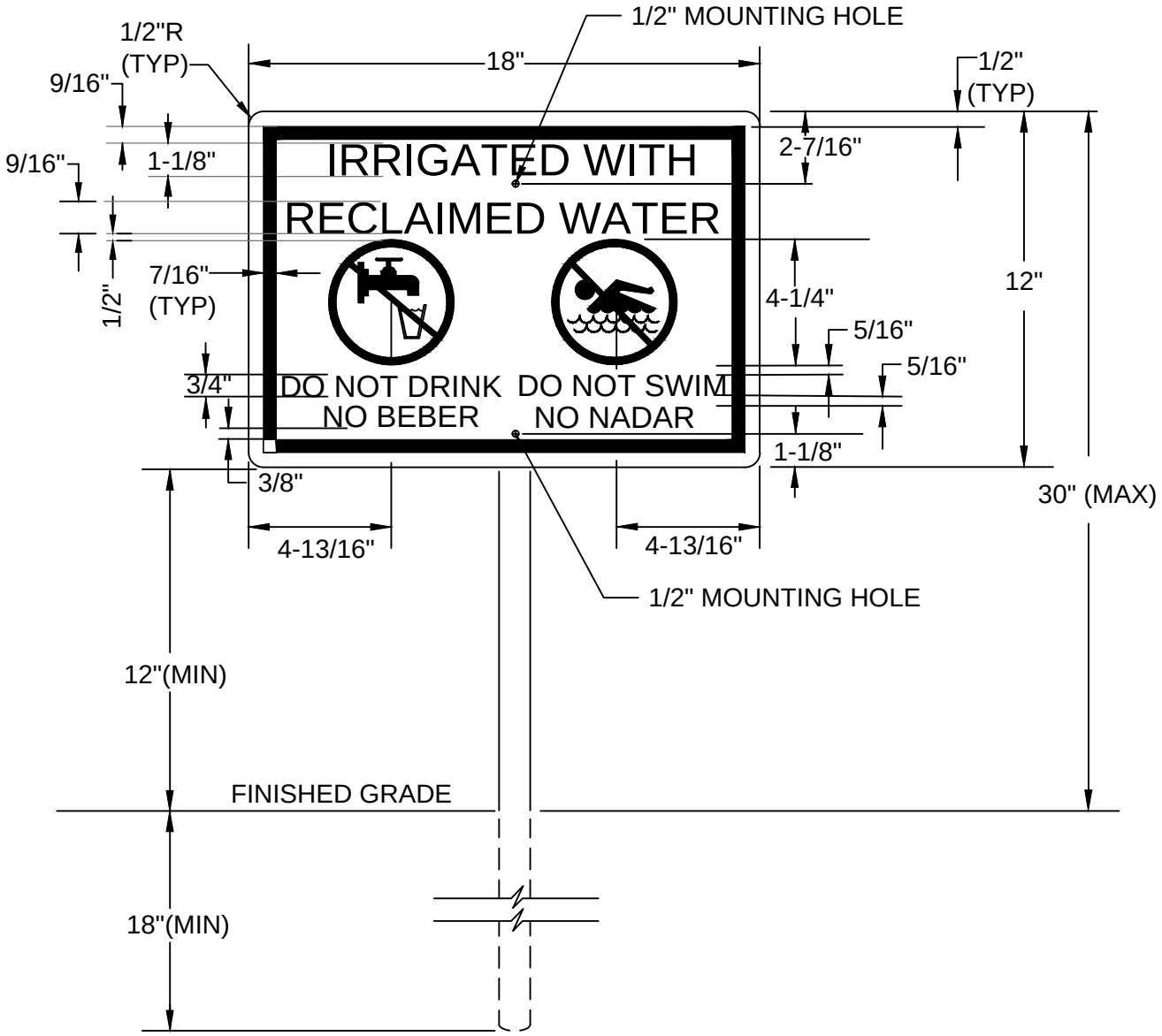

NOTES:

1. HEIGHT OF SIGN WILL DEPEND ON LOCATION AND SURROUNDING LANDSCAPE PLANT TYPES. IN ALL CASES, THE SIGN SHALL BE VISIBLE TO THE PUBLIC.
2. BACKGROUND SHALL BE WHITE, LETTERS SHALL BE PANTONE PURPLE 522C (HELVETICA, SWISS 721 COREL OR ACCEPTABLE EQUAL) AND BORDER SHALL BE PANTONE PURPLE 522C.
3. ENGINEERING GRADE REFLECTIVE MATERIALS SHALL BE USED.
4. SIGN MATERIAL SHALL BE OF 0.040 GAUGE ALUMINIUM.
5. POST SHALL BE 2-3/8" OD STEEL PIPE, HOT DIP GALVANIZED PER ASTM A-123. POST TO BE PROVIDED BY CUSTOMER.
6. MOUNTING HARDWARE SHALL BE STAINLESS STEEL.
7. SIGNS SHALL BE PLACED BY THE CONTRACTOR IN ACCORDANCE WITH CHAPTER 62-610 "ACCESS CONTROL AND ADVISORY SIGNS", FAC, THE COUNTY APPROVED ENGINEERING PLANS AND/OR AS APPROVED BY PCU.

RECLAIMED WATER SIGNAGE **"DO NOT DRINK / DO NOT SWIM"**	**FIGURE** **RW-02**
POLK COUNTY UTILITIES, FLORIDA	**DECEMBER, 2010**

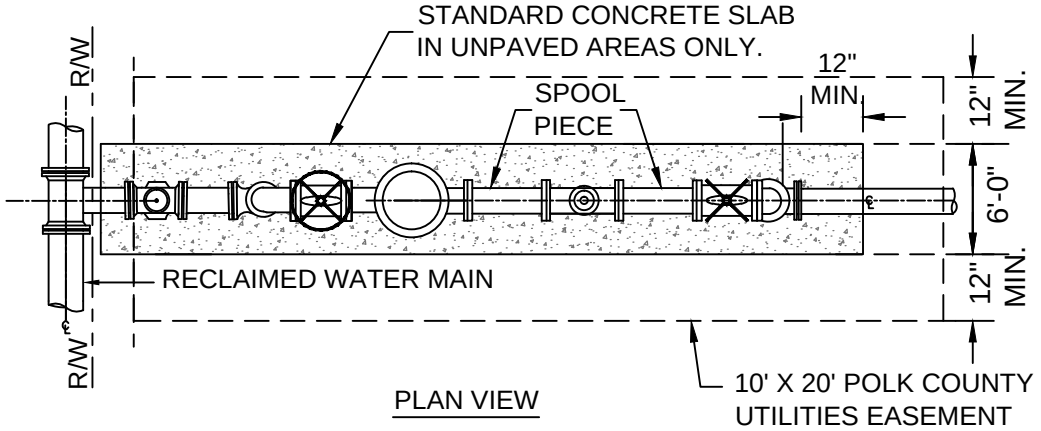

PLAN VIEW

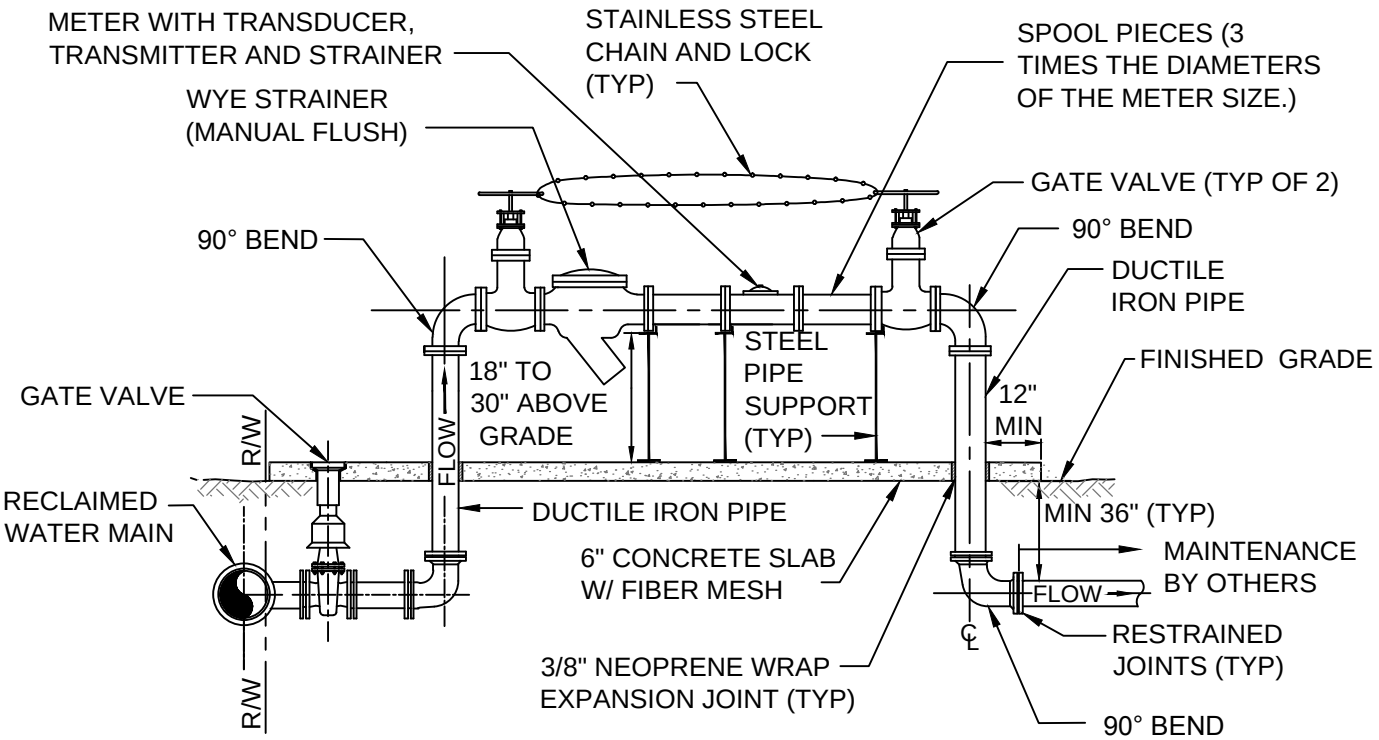

PROFILE VIEW

NOTES:

1. ALL PIPES AND FITTINGS ABOVE GRADE SHALL HAVE FLANGED ENDS.
2. ALL PIPES AND FITTINGS BELOW GRADE SHALL BE MECHANICAL RESTRAINED JOINT ENDS.
3. INSTALLATION SHALL COMPLY WITH ALL REQUIREMENTS OF CHAPTER 62-610 FAC.
4. PIPING AND APPURTENANCES SHALL BE PAINTED PANTONE PURPLE 522C. PVC PIPE SHALL BE COLORED FROM THE FACTORY WITH PANTONE PURPLE 522C USING LIGHT STABLE COLORANTS. PIPE SHALL BE MARKED TO POLK COUNTY SPECIFICATIONS.
5. METER SHALL BE CAPABLE OF ACCURATELY MEASURING THE ENTIRE RANGE OF EXPECTED FLOWS AND THE TYPE AND MANUFACTURER SHALL BE APPROVED BY THE PCU.

RECLAIMED WATER MASTER METER ASSEMBLY (LARGER THAN 2 INCH) WITHOUT STORAGE OR WELL BACKUP	**FIGURE RW-03**
POLK COUNTY UTILITES, FLORIDA	**DECEMBER , 2012**