Polk County Utilities, Florida

POLK COUNTY UTILITIES CODE

Polk County Board of County Commissioners

Bob English	Melony Bell	Ed Smith	Todd Dantzler	Sam Johnson
District 1	District 2	District 3	District 4	District 5

Jim Freeman	Bill Beasley, PE	Gary Fries, PE
County Manager	Deputy County Manager	Utilities Director

December 2010

PREFACE

December 2010

The Polk County Utilities Code contains the various operating policies, minimum acceptable design standards, and minimum acceptable construction specifications for PCU's water distribution and transmission facilities, wastewater collection and transmission facilities including wastewater pump stations, and reclaimed water distribution and transmission facilities.

It is the sincere hope of the PCU staff that the material presented herein is more readily accessible and up-to-date with the latest and proven technology. The entire process for approval and acceptance of water and wastewater systems by PCU is clear and timelier. If this has been accomplished, then the almost four years of work that went into its preparation will have been worthwhile.

PCU would like to thank the following individuals for their time and effort regarding the development of this revision of the Polk County Utilities Code:

Utilities Code Stakeholders Review Committee:

Bob Adams – Highland Homes

Jim Chastain, PE – Chastain-Skillman and Associates

Renee Heath – Cassidy Homes

Carlton Hodges – LeMan's Properties

Stephanie Hutton – Polk County Builders Association

Sam Killebrew (Bill Thomas, PE) – Killebrew Inc.

Alan Rayl, PE – Rayl Engineering and 2009/2010 President – FES Ridge Chapter

Bruce Scamehorn – Tucker Construction and Engineering

Scott Short – Censtate Construction

Bob Wilson (Mark Wilson, PE) – Kimley-Horn, and Associates

Gary Fries, PE – Polk County Utilities Director

Mike Crumpton, PE – Utilities Code Revision Editor and Staff Advisor to the Committee

The Public:

Robert F. Harper – Harper Development Group

Mark Johnson – Wager Company

Jay Hicks – A Y McDonald Mfg.

Michael Green – Homeland Security Products

Scott Fergerson – American Cast Iron Pipe

Bill Thomas, PE, PhD – Killebrew, Inc.

James Dickerson – Killebrew, Inc.

Clay Galloway – Star Pipe Products

PREFACE

December 2010

Rick Ratcliffe – American Flow Control
David Waters – Porter Associates
Eric Barfield – Ferguson Waterworks
Mark Frederick, PE – Kimley-Horn, and Assoc.
Chuck Freed, PE – The Colinas Group, Inc
Jim Servis – Mueller Company
Valerie Tutor – Valerie Tutor and Associates
Kevin Stine – Sigma Corp.
Bill Goodman – SpectraShield
Richard Neal – Underground Solutions
Kim Keefer, PE – PBS&J
Larry Brosious – L.J. Ruffin and Assoc.
Paul Blastic – Paul Blastic and Company

Polk County Staff:

Mike Crumpton, PE (Editor)
Greg Boettcher, PE
Bill Beasley, PE
Gary Fries, PE
Philip Sherwin, Esquire
Jim Barber
Jesse Collins
Surendra Gandhi, PE
Gerald Daniels
Kevin Johnston
Dennis Adams
Edmund Robinson
Diane Miller, PE
Amy Newton
Chrissy Irons
Jake Rohrich
Charles Richards, CPA
Sue Chiodo
Michael Sadler, PE
Kevin Holland
Tamar Ahmed
Eric Phillips
David Huff, PE
Don Silvia
Lisa Conran
Alan Yoder
Craig Fuller, PE
Greg Hentschel, PE
Jan Rogers
Krystal Azzarella
Glenn Semanisin, PE
Rubén Sepulveda
Dale Leon
Phillip Durham
Susan Britt
Russell Cannons
Terry Atkisson
Zhongyan Lin, PhD
Jeff Wright
Myra Glisson
Tim Todd
Karen Murphy
Jacqueline McCauley

PCU would like to also give a special thanks to the Orange County Utilities Department, which provided its 2007 Manual's digital source document for PCU's use in developing its completely revised "Utilities Standards and Specifications Manual".

UTILITIES CODE REVISION STAKEHOLDERS REVIEW COMMITTEE

Completion of Review Summer 2010

We, the undersigned, as participants of the Utilities Code Revision Stakeholders Review Committee have completed our review of the proposed revision of the Polk County Utilities Code and find it to be in the best interest of the citizens of the County. As such, we recommend that the proposed revision be presented to the Polk County Board of County Commissioners for adoption at the earliest possible date.

Jim Chastain, PE (Chastain-Skillman and Associates)

Rennie Heath (Cassidy Homes)

Carlton Hodges (LeMan's Properties)

Stephanie Hutton (Polk County Builders Association)

Sam Killebrew (Killebrew Inc.)

George Lindsey (Highland Homes)

Alan Rayl, PE (Rayl Engineering)

Scott Short (Censtate Construction)

Bruce Scamehorn (Tucker Construction and Engineering)

Bill Thomas, PE, PhD (Killebrew Inc.)

Mark Wilson, PE (Kimley- Horn, and Associates)

Gary Fries, PE (Polk County Utilities Director)

Mike Crumpton, PE (Utilities Code Revision Editor)

ORDINANCE NUMBER 10-081

AN ORDINANCE REGULATING THE INSTALLATION OF CERTAIN POTABLE WATER, WASTEWATER AND RECLAIMED WATER UTILITY SYSTEMS IN POLK COUNTY, FLORIDA; PROVIDING FOR A SHORT TITLE TO BE KNOWN AS THE "POLK COUNTY UTILITIES CODE"; PROVIDING FOR A STATEMENT OF PURPOSE; PROVIDING FOR SCOPE AND APPLICABILITY; PROVIDING FOR PREEMPTION; PROVIDING DEFINITIONS; PROVIDING FOR INCORPORATION OF REFERENCE MANUALS 6(A) THROUGH 6(G); DESCRIBING THE REGIONAL UTILITY SERVICE AREAS; ESTABLISHING POLK COUNTY UTILITIES (PCU) AS THE EXCLUSIVE PROVIDER OF UTILITY SERVICE IN PCU'S UTILITY SERVICE AREAS; ESTABLISHING CONNECTION CHARGES; ESTABLISHING DEVELOPER REIMBURSEMENT METHODOLOGY; ESTABLISHING THE UTILITIES CODE COMMITTEE; ESTABLISHING REFERENCE MANUAL REVISION PROCEDURE; PROVIDING FOR AN APPEAL PROCESS; PROVIDING FOR REMEDIES FOR NON-PAYMENT OF UTILITY SERVICE; PROVIDING FOR A BASIS FOR GRANTING VARIANCES; PROVIDING FOR SEVERABILITY; PROVIDING FOR THE REPEAL OF POLK COUNTY ORDINANCES 03-21 AND 04-08; PROVIDING FOR AN EFFECTIVE DATE.

BE IT ORDAINED BY THE BOARD OF COUNTY COMMISSIONERS OF POLK COUNTY, FLORIDA, that:

SECTION 1: SHORT TITLE

This Ordinance shall be known and may be cited as the "Polk County Utilities Code".

SECTION 2: PURPOSE

The purpose of this Ordinance is to promote the health, safety, and welfare of the public by regulating the installation of, operation of, and connection to certain utility systems, including potable water, wastewater, and reclaimed water. This Ordinance shall also ensure that the Polk County Comprehensive Plan is implemented so that land development shall not be permitted unless adequate capital facilities with the appropriate levels of service exist, or the construction of which is assured, with the Developer bearing a proportionate financial share to install new or expanded capital facilities required by such development. In the event of a conflict between the provisions of this Ordinance and the Polk County Comprehensive Plan, the Polk County Comprehensive Plan shall govern.

SECTION 3: SCOPE AND APPLICABILITY

The provisions of this Ordinance shall apply to:

A) any person or entity that undertakes to be served by, connect to, construct, expand, or improve any portion of a water, wastewater or reclaimed water

utility system contained within one of the PCU Regional Utility Services Areas (RUSA);

B) all proposed or existing developments within a PCU RUSA;

C) any proposed or existing development within any unincorporated area of Polk County that is subject to the jurisdiction of the Polk County Land Development Code; and

D) all Polk County Utilities (PCU) Community Investment Program projects, including rehabilitation and replacement projects.

Any development that will have its potable water, wastewater, and/or reclaimed water infrastructure owned and operated by a municipality, as part of that entity's Florida Statutes Chapter 180 extended service area, shall be exempt from this Ordinance unless the municipality elects to utilize the provisions of this Ordinance, as a whole or any part thereof.

SECTION 4: PREEMPTION

In the event any provision contained in this Ordinance is preempted by State or Federal statute, or if the subject matter of any provision fails under the exclusive jurisdiction of the State or Federal government, the State and/or Federal statute, rule, or regulation governing such provision shall be followed.

SECTION 5: DEFINITIONS

The following terms and phrases, as used in this document, shall have the meanings hereinafter designated, unless context clearly changes the meaning or unless a provision explicitly states otherwise. Definitions related to potable water, wastewater, and reclaimed water utility systems in this Ordinance which are not included herein shall have the same meanings as provided by Florida Statute (FS) and Florida Administrative Code (FAC).

Board: the Polk County Board of County Commissioners, Polk County, Florida.

Board of County Commissioners (BOCC): the Polk County Board of County Commissioners, Polk County, Florida.

Community Investment Plan (CIP): County documents that identify improvements to the PCU Water Systems, Wastewater Systems, and Reclaimed Water Systems that will be funded and constructed as identified within the current 5 year Master Plan for each PCU Regional Utility Service Area's water, wastewater, and reclaimed water system.

Comprehensive Plan: the Polk County Comprehensive Plan.

Connection Charges: fees charged by PCU, as based on an Equivalent Residential Connection, to pay for the replacement of potable water and wastewater capacity.

County: the Polk County Board of County Commissioners, Polk County, Florida and its employees.

Customer or **User:** any person or entity which receives, or may receive, utility service provided by PCU.

Developer: any private or public person, firm, corporation, or government entity engaged in developing or improving real estate for use or occupancy.

Development (aka Developer), Utilities, or Interlocal Agreement: a written agreement between the BOCC and a developer, property owner, or governmental entity setting forth in detail the terms and conditions under which PCU will provide utility service to the developer's project, the property owner's property, or the governmental entity. Such agreement will be made at the option of PCU where it deems such an agreement is in its best interest in order to facilitate the construction of capital project improvements that are designated in the Community Investment Plan and/or Master Plan for a particular RUSA, or as otherwise deemed necessary by PCU.

Director: the person who is responsible for the day to day administration and management of Polk County Utilities.

Engineer: an individual currently licensed to practice engineering in the State of Florida.

Equivalent Residential Connection (ERC): the unit of measurement used by PCU to estimate the utility service capacity usage of all classes of utility system users using a single family residential detached dwelling unit as a common denominator. One water ERC shall equate to the estimated gallons per day of potable water to be used and one wastewater ERC shall equate to the estimated gallons per day of wastewater to be generated. The daily flow rate for water and wastewater ERC's shall be as established by the Polk County Comprehensive Plan.

Land Development Code: the Polk County Land Development Code.

Master Plans: the current County approved documents that provide guides for the planned and orderly expansion of each PCU Regional Utility Service Area's Master Wastewater System, Master Water System, and Master Reclaimed Water System over a 5 year planning period, and that identifies financing requirements and revenue sources to implement the Community Investment Plan (CIP) for a given period.

Master Reclaimed Water Systems: major elements of the reclaimed water systems that include regional reclaimed water facilities, structures, equipment, processes, land, and appurtenances thereto, required to operate and maintain a system which produces and distributes reclaimed water for irrigation purposes and other authorized uses that are part of a PCU Reclaimed Water System Master Plan.

Master Wastewater Systems: major elements of the wastewater systems that include regional wastewater treatment and disposal facilities, reclaimed water use facilities, large collection mains and interceptors, regional wastewater pumping stations and force mains, land, and related facilities that are part of a PCU Wastewater System Master Plan.

Master Water Systems: major elements of the water systems that include regional supply wells, pumping stations, treatment facilities, storage tanks, transmission mains,

monitoring wells, land, and related facilities that are part of a PCU Water System Master Plan.

Polk County Utilities (PCU): the Polk County entity which has the responsibility of administering, operating, and maintaining the potable water, wastewater, and reclaimed water facilities and infrastructure owned and/or operated by the County.

Reclaimed Water System: the structures, equipment, processes, augmentation wells, land, and appurtenances required to operate and maintain a system which produces and distributes reclaimed water for irrigation purposes and other authorized uses.

Regional Utility Service Areas: those designated portions of Polk County in which PCU maintains the exclusive right to provide public utility systems.

Registered Holder: any individual that enters into the official Polk County Utilities Code web page and provides the requested voluntary information for future notifications regarding the Utilities Code.

User or Customer: any person or entity which receives, or may receive, utility service provided by PCU.

Utilities Code Committee: shall be comprised of the Utilities Capital Projects Section Manager, Utilities Customer Services Section Manager, Operations and Maintenance Section Manager, and representatives from the County Engineer Section and the County Purchasing Division, or designees. The Committee shall perform all duties described in Section 11 of this Ordinance. The Utilities Director shall be in-eligible to serve on the Utilities Code Committee.

Utility Service: the provision of potable water, wastewater, and/or reclaimed water service to a customer.

Utility System: the potable water, reclaimed water, and wastewater transmission mains, distribution mains, pipes, fittings, valves, hydrants, services, meters, pumps, pump stations, production facilities, treatment facilities, and miscellaneous related appurtenances required to operate and maintain a water, wastewater, or reclaimed water system.

Wastewater System: the structures, equipment, processes, land, reclaimed water system augmentation wells, and appurtenances thereto, required to operate and maintain a system to collect, convey, and treat wastewater and dispose of the effluent and sludge. Wastewater systems shall not include storm water facilities.

Water Conservation Plans: the current PCU documents that provide a guide for the most efficient use of PCU's water resources and that identify water conservation elements as required by the rules of Florida Department of Environmental Protection and the Water Management Districts of each regional utility service area.

Water Resource: any potable, reclaimed, alternative, or supplement water furnished by PCU. Treated wastewater shall also be considered a resource.

Water System: the structures, equipment, processes, land, sources, and appurtenances thereto, required to operate and maintain a system to treat, pump, store, distribute, and meter potable water.

SECTION 6: REFERENCE MANUALS

Each of the technical and administrative Reference Manuals described below will further describe the implementation of certain technical and administrative aspects of this Ordinance. Each Reference Manual is hereby incorporated into and made a part of this Ordinance and shall be updated in accordance with Section 12 herein, "Reference Manual Revision Procedure" of this Ordinance. Reference to these Manuals is made herein by the Title or Ordinance Section and Letter Identifier stated below, i.e., 6 (A), 6 (B), etc., as determined appropriate.

(A) Utilities Administration Manual: This Manual contains the procedures and policies that have been established by PCU for the administration of its utility system, including the following: (1) processing of new connections, deposits, disconnections, transfers, name changes, disconnections for seasonal absence, adjustments, and terminations: (2) connection charge calculation and reassessments; (3) processing and administering payments (walk-in, mail, telephone, bank drafting, IVR, and internet), bulk service late charges, liens and remedies for non-payment of utility service and returned checks; (4) installation of permanent and temporary water meters and irrigation meters, changes in meter size, relocations of meters, obscured meters, and meter testing; and (5) procedures governing meter reading requirements, schedules and rates, connection charges, and bulk rates. The rate and charge schedules shall be established from time to time by a separate resolution adopted by the BOCC. This Manual shall contain the legal descriptions in text and map for each of the 6 PCU Regional Utility Service Areas and the Connection Fee Calculation Methodology that is to be utilized to determine connection charges.

(B) Utilities Standards and Specifications Manual: This Manual describes the minimum acceptable standards and specifications that have been established by PCU for the design and construction of wastewater collection and transmission systems and potable water and reclaimed water distribution and transmission facilities to be served by or owned, operated, and maintained by PCU and as otherwise intended by this Ordinance. This Manual establishes procedures and requirements for coordination through the review process of plans for developments that intend to utilize PCU potable water, reclaimed water, or wastewater service. This Manual delineates the processes for submittals, reviews, approvals, and acceptance of potable water, reclaimed water, and wastewater systems and facilities to be served by or owned, operated and maintained by PCU.

(C) Utilities Cross-Connection Control Policy Manual: This Manual describes the program and policy that has been established by PCU to meet the requirements of all applicable federal, state, and local water regulations relating to the prevention and elimination of cross-connections and backflow in all PCU

public potable water systems. Specifically, the purpose of this program is to protect the PCU potable water supply from possible contamination by isolating, at the point of the customer's water service connection to the PCU water system, such contaminants or pollutants that could backflow or back-siphon into the public system, and to eliminate any actual or potential cross-connection between the PCU system and other water sources of unsafe or unknown quality.

(D) Reclaimed Water Policy Manual: This Manual describes the program and policy that has been established by PCU to meet the requirements of all applicable federal, state, and local regulations regarding reclaimed water and its availability for irrigation purposes and other authorized non-potable uses in certain areas of Polk County where it is determined by PCU that the construction of a reclaimed water distribution system is necessary, practical, and beneficial, and for the regulation thereof.

(E) Industrial Wastewater Pretreatment Policy Manual: This Manual describes the program and policy that has been established by PCU to meet the requirements of all applicable federal, state, and local regulations regarding requirements for its wastewater customers to utilize in order to prevent the introduction of pollutants into the wastewater system that could interfere with the normal operation of the system, contaminate the resulting residuals, or pass through the system into receiving waters or the atmosphere. In addition, this program seeks to ensure the quality of the treated wastewater and residuals in order to provide high quality products for reuse and recycling in compliance with applicable federal, state, and local regulations.

(F) Utilities Water Conservation Policy Manual: This Manual describes the program and policy that has been established by PCU to meet the requirements of all applicable federal, state, and local regulations to promote the most efficient and beneficial use of the PCU's water resources with a combination of educational, financial, operational and regulatory initiatives, without lowering the quality of service to PCU customers. The program includes specific water conservation plans for each regional utility service area as follows:

(1) Central Regional Utility Service Area (CRUSA)
(2) East Regional Utility Service Area (ERUSA)
(3) Northeast Regional Utility Service Area (NERUSA)
(4) Northwest Regional Utility Service Area (NWRUSA)
(5) Southeast Regional Utility Service Area (SERUSA)
(6) Southwest Regional Utility Service Area (SWRUSA)

(G) Utilities Fats, Oils, and Grease Policy Manual: This Manual describes the program and policy that has been established by PCU to meet the requirements of all applicable federal, state, and local regulations in order to prevent the introduction of fats, oils, and grease into PCU's wastewater system from its wastewater customers that could interfere with the normal operation of the system or result in overflow discharges of wastewater into receiving waters and the environment.

SECTION 7: REGIONAL UTILITY SERVICE AREAS

Regional Utility Service Areas (RUSAs), as set forth in Reference Manual 6 (A), are established for the purpose of planning for the provision of utility service to existing and future PCU customers. Because of the large size and topographic diversity of Polk County, it is not practical to construct a single unified or a completely interconnected system of utility facilities. Therefore, a series of separate regional utility systems is provided as needed in accordance with reasonable and acceptable engineering standards and economic principles. Changes to the boundaries of the Regional Utility Service Areas shall be accomplished in accordance with State Statutes.

SECTION 8: PCU AS EXCLUSIVE PROVIDER OF UTILITY SERVICE IN PCU REGIONAL UTILITY SERVICE AREAS

Except as otherwise provided herein and approved by PCU, PCU shall be the exclusive provider of utility service within a PCU RUSA. Connection to a potable water, wastewater, or reclaimed water system shall be required in accordance with the Land Development Code and Comprehensive Plan. Once a customer is connected to a public utility system, it shall be unlawful for that customer to disconnect without the express written approval of the utility provider.

SECTION 9: CONNECTION CHARGES

Water and wastewater connection charges, as revised from time to time by a separate Resolution adopted by the BOCC and made part of the "Utilities Administration Manual", shall be imposed for each structure that requires an individual Building Permit and/or Certificate of Occupancy to be issued by the Building Official, regardless of ownership unless exempted by State or Federal statutes. All other connections to the PCU system shall also be subject to connection charges. The purpose of these charges shall be to offset the costs of providing utility service. The charges shall be based on the structure's or connection's estimated amount of required utility service capacity as determined by PCU utilizing the Connection Charge Calculation Methodology contained in the "Utilities Administration Manual". Changes to the Connection Charge Calculation Methodology shall be accomplished by a separate BOCC adopted resolution.

SECTION 10: DEVELOPER REIMBURSEMENT

A) When a DEVELOPER proposes to construct an extension or improvement of a PCU utility system, PCU may reimburse the DEVELOPER for the eligible costs of the utility system extension or improvement project on the basis of reasonable and customary costs of materials and labor, and as further described below.

   1) PCU will reimburse the DEVELOPER, in accordance with a BOCC approved Development, Utilities, or Interlocal Agreement, for eligible actual costs, including applicable state sales taxes, to construct PCU CIP utility system extension and improvement projects when the construction timeline for an affected proposed development's utility system extension

and improvement projects parallel the current PCU 5-Year CIP funding timeline. PCU will reimburse the DEVELOPER for the eligible actual installation and material costs for such utility system extension and improvement projects. As the proposed development's construction timeline will parallel the PCU CIP funding timeline, it is anticipated that PCU will have approved final construction plans and all applicable permits available for the use of the DEVELOPER to construct the PCU utility system extension and improvement projects.

2) PCU will reimburse the DEVELOPER, in accordance with a BOCC approved Development, Utilities, or Interlocal Agreement, for the eligible costs, including applicable state sales taxes, of utility system extension and improvement projects which a) are above the design needs of the proposed development, b) do not have a construction timeline that parallels the current PCU 5-Year CIP funding timeline, c) are determined by PCU to be in its best interest to oversize or otherwise participate in the utility system extension or improvement project, and d) found financially feasible by PCU for reimbursement. PCU will reimburse the DEVELOPER for the increased eligible material costs only of such over-sizing up to two pipe sizes for distribution, collection, and transmission mains. PCU will reimburse the DEVELOPER for the increased eligible design, installation, and material costs of such over-sizing over two pipe sizes and related improvements for distribution, collection, and transmission mains. PCU will reimburse the DEVELOPER for all increased eligible over-sizing costs related to the design, permitting, and construction of non-main improvements.

3) For utility system extension and improvement projects required by a proposed development to meet its design needs which are not included in the affected subject RUSA's current 5-Year CIP Program, the costs of all such utility system extension or improvement projects shall be paid for in their entirety by the DEVELOPER.

B) Design, installation, and material costs for system extension and improvement projects that are eligible for reimbursement may include the costs of surveying, designing, engineering, permitting, constructing, inspection, and testing the utility systems, plus the preparation of Record Drawings. Costs that are not eligible for reimbursement include legal costs, real estate and easement acquisition costs, interest costs, and administration costs and corporate management.

C) Reimbursement payments shall be no more frequent than quarterly, and the payment period shall not extend beyond ten years from the date of the agreement between the DEVELOPER and the BOCC.

D) Prior to the BOCC's formal acceptance of the utility system improvement or reimbursement to the DEVELOPER, the DEVELOPER shall pay all applicable charges.

E) Reimbursement will occur only after the BOCC's formal acceptance of the subject utility system improvements.

F) Reimbursement to a DEVELOPER or other property owner shall not be based on future connections by a third party to a system extension.

G) Nothing contained herein shall be construed as restricting or preventing PCU's ability to enter into a special arrangement with a user, as determined by PCU to be in its best interest, whereby the specific terms of obtaining service are set forth in a Developer Agreement.

SECTION 11: UTILITIES CODE COMMITTEE

The UTILITIES CODE COMMITTEE, as defined in Section 5 "Definitions" above, shall be charged with updating the seven REFERENCE MANUALS on a periodic basis in accordance with Section 12 "Reference Manual Revision Procedure" below, to systematically evaluate and approve products in accordance with the "Utilities Standards and Specifications Manual", and perform all other duties as established by this Ordinance. The Chair Person of the UTILITIES CODE COMMITTEE shall be selected by and from the members of the UTILITIES CODE COMMITTEE on an annual rotating basis.

SECTION 12: REFERENCE MANUAL REVISION PROCEDURE

To meet the needs of PCU and the changes in technology, it is necessary to periodically revise and update the seven REFERENCE MANUALS. These revisions will be administered by the UTILITIES CODE COMMITTEE. Such revisions, amendments, and additions shall be binding and in full force and effect when published in the manner set forth below.

A) With the exception of revisions to forms, tables, charts, and flow charts that are solely intended for the internal use of PCU, proposed revisions to a REFERENCE MANUAL will be emailed to REGISTERED HOLDERS of the REFERENCE MANUAL for comment. Recipients of the proposed revisions will have **30 calendar days** to provide written comments to the web site.

B) At least one informal workshop will be scheduled by the UTILITIES CODE COMMITTEE to discuss the proposed revisions. All REGISTERED HOLDERS of the REFERENCE MANUAL will receive electronic mail notification of any scheduled workshop at least five business days in advance of the workshop.

C) After the informal workshop, the UTILITIES CODE COMMITTEE will recommend revisions in the best interest of PCU and note dissenting viewpoints to the DIRECTOR for action.

D) Proposed revisions will be posted on the web site for a period of **30 calendar days** prior to the DIRECTOR taking action.

E) All proposed revisions approved by the DIRECTOR will become part of the subject REFERENCE MANUAL. Proposed revisions not approved shall be posted on the web site along with the justification for denial.

F) The revisions will be placed on the web site and the REGISTERED HOLDERS of the subject REFERENCE MANUAL will be notified in a timely manner by electronic mail of the effective date of the change. The effective date of such revisions shall be **30 calendar days** from the date of approval and shall supersede the prior REFERENCE MANUAL.

Whenever errors or conflicts occur that can impact the environment, the public health, safety, and welfare, or the best interests of PCU, a recommendation will be forwarded to the DIRECTOR by the UTILITIES CODE COMMITTEE for approval of a revision to resolve or remove the conflict. The effective date for this type of revision will be the date of the approval by the DIRECTOR.

REGISTERED HOLDERS will be notified of the change in a timely manner via electronic mail. It will be each REGISTERED HOLDER's responsibility to maintain a current set of the REFERENCE MANUALS.

Each REFERENCE MANUAL that has been revised in accordance with this Section shall be presented to the BOCC at an interval of not more frequently than once a calendar year for BOCC adoption by separate resolution.

SECTION 13: APPEAL PROCESS

This Section regarding the appeal process shall apply only to privately constructed projects within the jurisdiction of the LAND DEVELOPMENT CODE. The appeal process shall not apply to PCU Community Investment Program projects.

A) Appeals to the UTILITIES CODE COMMITTEE

Any person aggrieved by a decision of an individual COUNTY staff member, relative to any REFERENCE MANUAL, may appeal such decision to the UTILITIES CODE COMMITTEE. Such appeal must be in writing and made within **7 calendar days** of the decision of the staff member. The appeal shall include a summary of the decision being appealed and the basis for the appeal. The UTILITIES CODE COMMITTEE will meet, within **15 calendar days** of the receipt of the appeal, to discuss the matter and will render a decision within **7 calendar days** of conclusion of the meeting. The person making the appeal to the UTILITIES CODE COMMITTEE may attend the meeting and will have an opportunity to present information to the Committee regarding their interest.

B) Appeals to DIRECTOR

Any person aggrieved by an appeal decision made by the UTILITIES CODE COMMITTEE, relative to any REFERENCE MANUAL, may appeal such

decision to the DIRECTOR. Such appeal must be in writing and made within **7 calendar days** of the decision by the UTILITIES CODE COMMITTEE. The appeal shall include a summary of the decision being appealed and the basis for the appeal. The DIRECTOR shall have **15 calendar days** from the receipt of the appeal to render a decision.

C) Appeals to the COUNTY MANAGER

Any person aggrieved by an appeal decision made by the DIRECTOR, relative to any REFERENCE MANUAL, may appeal such decision to the COUNTY MANAGER. Such appeal must be in writing, made within 7 calendar days of the DIRECTOR's decision, and a copy of the appeal must be forwarded to the DIRECTOR. The appeal shall include a summary of the decision being appealed and the basis for the appeal. The COUNTY MANAGER shall have **15 calendar days** from the receipt of the appeal to render a decision.

D) Appeals to the BOCC

Any person aggrieved by an appeal decision, made by the COUNTY MANAGER, relative to any REFERENCE MANUAL, may appeal such decision to the BOCC upon written request of the affected party. Each such appeal shall be submitted with an Appeals Fee as established by a separate resolution adopted by the BOCC. In deciding such appeals, the BOCC shall consider the provisions and intent of this Ordinance and shall consider the legitimate interest of the affected party as well as the interest of existing PCU customers.

SECTION 14: LIENS AND REMEDIES FOR NON-PAYMENT OF SERVICE

Subject to the provisions of F.S. 125.485, if the fees, rates or charges for the services and facilities of the PCU water, wastewater and reclaimed water systems shall not be paid as and when due, and shall be in default for 30 days or more, then the unpaid balance thereof, together with attorneys' fees and costs, may be recovered by the COUNTY in a civil action, by recording of a Notice of Lien, by referring the delinquent account to a collection agency, or a combination thereof. In the event the delinquent account holder is the owner of the property to which utility service was provided, a Notice of Lien, in such form as the Board of County Commissioners shall determine appropriate, may be filed in the office of the Clerk of the Circuit Court of Polk County, Florida and shall be recorded as other liens are recorded. Any such lien, upon recording, shall be constructive notice of such lien and may be foreclosed or otherwise enforced by the COUNTY by action or suit in equity. Any lien provided for in this section shall accrue interest at the statutory rate, as provided for in F.S. 687.01 and F.S. 55.03 as amended from time to time, from the date of recording. Such interest as provided for in this Section shall also constitute a lien against the property assessed of equal dignity to that of the underlying lien.

SECTION 15: VARIANCES

The BOCC may grant variances from the provisions of this Ordinance provided the applicant presents evidence of compliance with Section 13 "Appeals Process" above and demonstrates that compliance with the literal terms of this Ordinance is impossible or will result in undue hardship. It shall be the burden of the applicant to demonstrate that the granting of the variance will neither subvert the spirit or intent of this Ordinance nor be prejudicial to the interests of PCU's customers.

SECTION 16: SEVERABILITY

If any provision of this Ordinance is determined to be invalid or unconstitutional by a court of competent jurisdiction, such provision shall be deemed a separate, distinct and independent provision and such holding shall not affect the validity of the remaining portions of this Ordinance.

SECTION 17: REPEAL OF ORDINANCES 03-21 AND 04-08

Polk County Ordinance 03-21, as amended by 04-08, and its Reference Documents are hereby repealed upon the effective date of this Ordinance, with the exception that the design standards only as contained within Reference Document 6 (C) of Ordinance 03-21, as amended by 04-08, shall continue to apply to proposed projects that are formally received by the COUNTY prior to the effective date of this Ordinance. The construction and material specifications adopted as part of this Ordinance shall apply to such proposed projects. Said non-renewable exception shall be valid for a maximum of either three calendar years from the date of COUNTY Level 2 approval or four calendar years from the date of formal receipt of the proposed project by the COUNTY, whichever is more restrictive.

SECTION 18: EFFECTIVE DATE

This Ordinance shall become effective upon filing with the Florida Department of State.

DULY ADOPTED in regular session, this 1st day of Dec., 2010

STATE OF FLORIDA)

COUNTY OF POLK)

I Richard M. Weiss, Clerk of the Board of County Commissioners of Polk County, Florida hereby certify that the foregoing is a true and correct copy of Ordinance No. 10-081 adopted by the Board on December 01, 2010.

WITNESS my hand and official seal of said Board this 2nd day of December 2010.

Richard M. Weiss
Clerk to the Board

By Kathryn Courtney

Kathryn Courtney
Deputy Clerk

Polk County Utilities, Florida

UTILITIES ADMINISTRATION MANUAL

Utilities Code Reference Manual 6(A)

Polk County Board of County Commissioners

Bob English	Melony Bell	Ed Smith	Todd Dantzler	Sam Johnson
District 1	District 2	District 3	District 4	District 5

Jim Freeman	Bill Beasley, PE	Gary Fries, PE
County Manager	Deputy County Manager	Utilities Director

December 2010

(Reference Manual Update: March 2012)

UTILITIES ADMINISTRATION MANUAL

December 2010

1.0 GENERAL

This MANUAL establishes the business and administrative policies used by Polk County Utilities (PCU) to conduct business with its present and future customers.

1.1 Definitions

Except where specific definitions are used within a specific section, the following terms, phrases, words, and their derivations shall have the meaning given herein when consistent with the context. Words used in the present tense include the future tense, words in the plural number include the singular number, and words in the singular number include the plural number. The word "shall" is mandatory, and the word "may" is permissive.

AWWA: the American Water Works Association. Any reference to AWWA Standards shall be taken to mean the most recently published revision unless other wise specified.

ACCEPTANCE: the formal acceptance of a utility system by Polk County in open session by way of agenda item approval, as prepared and presented by PCU.

BOARD: the Polk County Board of County Commissioners, Polk County, Florida.

BOARD OF COUNTY COMMISSIONERS (BOCC): the Polk County Board of County Commissioners, Polk County, Florida.

BUILDING DIVISION: the Polk County Building and Codes Division.

COMMERCIAL: see **NON-RESIDENTIAL**.

CONNECTION CHARGES: fees charged by PCU, as based on an Equivalent Residential Connection, to pay for the replacement of potable water and wastewater capacity.

CONSTRUCTION PLANS: the drawings submitted to Polk County for approval for construction of utility systems.

COMPREHENSIVE PLAN: the Polk County Comprehensive Plan.

CONTRACTOR: the person, firm, or corporation licensed by the State of Florida with whom a contract for work has been made by owner, developer, or County.

CONVEYANCE AND OWNERSHIP OF UTILITY SYSTEMS: all utility system components to be owned by PCU shall be conveyed to PCU by proper bill of sale immediately after the Board's written acceptance of the construction of said utility system.

COUNTY: the Polk County Board of County Commissioners, Polk County, Florida and its employees.

COVER SHEET: the first sheet in a set of engineering drawings or plans.

CUSTOMER or USER: any person or entity which receives, or may receive, utility service provided by PCU.

CUSTOMER SERVICE: the Customer Service entity within Polk County Utilities.

DEVELOPER: the person, firm, or corporation engaged in developing or improving real estate for use or occupancy.

DEVELOPMENT COORDINATION: personnel located within the Growth Management Department that are responsible for the coordination of utility issues related to development activities.

DIRECTOR: the person who is responsible for the day to day administration and management of Polk County Utilities.

DRAWINGS: engineering drawings or plans prepared by engineer.

ENGINEER: an individual currently licensed to practice engineering in the State of Florida.

EQUIVALENT RESIDENTIAL CONNECTION (ERC): the unit of measurement used by PCU to estimate the utility service capacity usage of all classes of utility system users using a single family residential detached dwelling unit as a common denominator. One water ERC shall equate to the estimated gallons per day of potable water to be used and one wastewater ERC shall equate to the estimated gallons per day of wastewater to be generated. The daily flow rate for water and wastewater ERC's shall be as established by the Polk County Comprehensive Plan.

EXCLUSIVE PROVIDER: except as otherwise provided herein and approved by PCU, PCU shall be the exclusive provider of utility service within a PCU RUSA.

FACILITY: any part of a utility system that is to be owned, operated, and/or maintained by PCU.

FLORIDA ADMINISTRATIVE CODE (F.A.C.): the Florida Administrative Code.

FDOT: the Florida Department of Transportation.

INSPECTOR: a County employee or consultant that is qualified and authorized to perform inspections on behalf of PCU.

LAND DEVELOPMENT CODE (LDC): the Polk County Land Development Code.

LATERAL: the gravity based piping system that conveys wastewater from the customer's property to a PCU gravity wastewater collection main.

MANUAL: this document entitled: "Polk County Utilities Administration Manual".

NON-RESIDENTIAL: a land development project intended for construction of infrastructure improvements for non-residential unit(s) and/or use(s). Non-residential units and/or uses include all units/uses that are not individually metered single family dwellings, including, but not limited to: commercial, industrial, institutional, short-term rental, and other business enterprises, and all master-metered residential developments, such as duplex, triplex, quadruplex, apartment, condominium, and other multifamily units/complexes, mobile home parks, recreational vehicle parks, etc.

OPERATIONS: the Operations and Maintenance entity of Polk County Utilities.

OWNER: the legally recognized owner, or authorized representative, of real property within Polk County.

POINT OF CONNECTION: the point of attachment on a PCU potable water, wastewater, or reclaimed water main of a customer's potable water service, reclaimed water service, gravity wastewater lateral piping, gravity main, or force main.

POINT OF SERVICE: the downstream side of the potable water or reclaimed water meter that serves the customer. Also, the point at which the customer's gravity wastewater lateral, gravity main, or force main piping crosses the customer's property boundary nearest to the receiving PCU main.

POLK COUNTY UTILITIES (PCU): the Polk County entity which has the responsibility of administering, operating, and maintaining the potable water, wastewater, and reclaimed water facilities and infrastructure owned and/or operated by the County.

POLK COUNTY UTILITIES EASEMENT: an easement as specified in the Utilities Standards and Specifications Manual that is dedicated to the use of PCU. Conveyance of any PCU easement not depicted on a recorded plat shall be by separate easement document in recordable form approved by PCU.

POTABLE WATER SYSTEM: the pipes, structures, equipment, processes, land, and appurtenances thereto, required to operate and maintain a system to treat, pump, store, distribute, and meter potable water.

PLANS: drawings as defined herein above.

RECLAIMED WATER SYSTEM: the pipes, structures, equipment, processes, land, and appurtenances that are required to operate and maintain a system which produces and distributes reclaimed water for irrigation purposes and other authorized uses.

RECORD DRAWINGS: drawings prepared by a Florida licensed professional engineer or Florida licensed professional land surveyor providing information, both written and drawn,

as to the actual locations, elevations, and alignments of valves, fittings, hydrants, manholes, pipes, etc.

REFERENCE MANUAL 6(A): this Manual, the Polk County Utilities Administration Manual, adopted by reference herein.

REFERENCE MANUAL 6(B): the Polk County Utilities Standards and Specifications Manual, adopted by reference herein.

REFERENCE MANUAL 6(C): the Polk County Utilities Cross-Connection Control Policy Manual, adopted by reference herein.

REFERENCE MANUAL 6(D): the Polk County Utilities Reclaimed Water Policy Manual, adopted by reference herein.

REFERENCE MANUAL 6(E): the Polk County Industrial Wastewater Pre-Treatment Policy Manual, adopted by reference herein.

REFERENCE MANUAL 6(F): the Polk County Utilities Water Conservation Policy Manual, adopted by reference herein.

REFERENCE MANUAL 6(G): the Polk County Utilities Fats, Oils, and Grease Policy Manual, adopted by reference herein.

REGIONAL UTILITY SERVICE AREA: an established area for the purpose of planning and the provision of utility service to existing and future PCU customers. Because of the large size and topographic diversity of Polk County, it is not practical to construct a single unified or a completely interconnected system of utility facilities. Therefore, a series of separate utility systems is provided as needed in accordance with reasonable and acceptable engineering standards and economic principles.

RESIDENTIAL: a single-family residential dwelling unit served by an individual meter, not including a short-term rental unit.

SERVICE: the pressurized piping system that conveys potable water or reclaimed water from a corresponding PCU main to the meter that serves the customer's property.

SHORT-TERM RENTAL: a dwelling unit which is made available more than three times a year for periods of fewer than 30 days or one calendar month at a time, whichever is less, for use, occupancy or possession by the public, regardless of the form of ownership of the unit. Dwelling units commonly referred to as "timeshares," "vacation rentals," and "holiday rentals" which possess the above characteristics are included within this definition.

SPECIFICATIONS: the construction specifications contained in the Polk County Utilities Standards and Specifications Manual.

STANDARDS: the design standards contained in the Polk County Utilities Standards and Specifications Manual.

SURVEYOR: an individual currently licensed to practice surveying in the State of Florida.

UTILITIES CUSTOMER SERVICES: the Utilities Customer Services entity of Polk County Utilities.

UTILITY SERVICE: the provision of potable water, wastewater, and/or reclaimed water service to a customer.

UTILITY SYSTEM: potable water, reclaimed water, and wastewater transmission mains, distribution mains, pipes, fittings, valves, hydrants, services, meters, pumps, pump stations, production facilities, treatment facilities, and miscellaneous related appurtenances.

WASTEWATER SYSTEM: the structures, equipment, processes, land, and appurtenances thereto, required to operate and maintain a system to collect, convey, and treat wastewater and dispose of the effluent and sludge. Wastewater systems do not include storm water facilities.

WORK: the labor, materials, equipment, supplies, services, and other items necessary for the execution, and completion of the utility system.

2.0 BUSINESS OFFICES

2.1 Establishment

PCU shall operate a main business office and may add, move, or close satellite business offices for the convenience of customers or any sound business reason. Changes to business office locations shall be approved by the Utilities Director and the County Manager's Office. A virtual office may be maintained for the convenience of customers.

2.2 Locations and Contact Information

MAIN OFFICE

Utilities Administration Building
1011 Jim Keene Boulevard, CR 540
Winter Haven, Florida 33880
Local Calls: (863) 298-4100
Toll Free Calls: (800) 301-6039
utilities@polk-county.net

VIRTUAL OFFICE

Web Page: **http://www.polk-county.net/utilities.aspx**

To use, select: "Click Here to Pay Your Polk County Utility Bill".

Or to use the Interactive Voice Response Phone System:

Dial (863) 298-4100

2.3 Hours of Operation

Main Office

8:00 a.m. – 4:30 p.m., Monday – Friday
Excluding Board of County Commissioners
Scheduled Holidays

Virtual Office

24 hours a day
7 days a week

2.4 Service Capabilities

SERVICE AVAILABLE	MAIN OFFICE	SATELLITE OFFICE	VIRTUAL OFFICE
Talk by phone to a Customer Service Representative	YES	As Designated	NO
Talk in Person to a Customer Service Representative	YES	As Designated	NO
Open a new Account or Establish a new service	YES	As Designated	NO
Close or make changes to your account	YES	As Designated	NO
Obtain Account Information	YES	As Designated	YES
Make a Credit or Debit Card Payment	YES	As Designated	YES

3.0 BUSINESS PRACTICES

3.1 Obtaining Service

All services and laterals plus their extensions shall be installed perpendicular from the point of connection on the corresponding PCU main to the Customer's desired point of service. The Customer shall be financially responsible for all costs to design, permit, and install any extension of a PCU main that is necessary to comply with the above requirement. The main size shall be in accordance with PCU's minimum main size

requirements as stated in the "Utilities Standards and Specifications Manual". Should an easement or additional public right-of-way be needed, the Customer shall be financially responsible for obtaining the appropriate Polk County Utilities Easements and/or additional public rights-of-way.

3.1.1 Residential Service at an Existing Service Location

Existing service connections are processed at the Utilities Customer Service's New Services Desk located at the main office or a satellite office. When a request for service is received, including all applicable forms and documentation with all fees paid, the account will be set up for connection the next business day or upon the date requested. A new account charge to cover the expenses of setting up the new account and to turn on the meter(s) will be assessed and a deposit collected in accordance with Section 3.2 of this MANUAL. If the customer requests that the meter be turned on outside of normal business hours due to an emergency, a fee including an overtime charge will also be assessed. All fees and charges described herein shall be in accordance with a separate BOCC approved resolution. Two forms of identification will be required to set up a new service including a photo-identification. A state issued drivers license and social security card are the preferred means of identification. The following documents and forms, located in the Appendix of this MANUAL, shall be required to be fully executed in order to establish a new service:

A) Application for Service (For water only, wastewater only, or water and wastewater customers)

B) Application for Reclaimed Water Service (Only if reclaimed water is currently available at the service location)

C) Two forms of Identification

When a new customer applies for connection to an existing service, verification of the initiation date may be provided in the form of a copy of the residential rental agreement, business lease agreement, or mortgage document (must be in account holder's name), and/or electric service start date (must be in account holder's name). A new account/processing charge shall be paid for each account initiated. Additional charges for same day service, if requested, along with other applicable fees shall be assessed.

3.1.2 Non-Residential Service at an Existing Service Location

In addition to the requirements for residential customers, non-residential customers must provide the following additional information:

A) Business ownership documentation specifying business ownership form

B) List of Officers and Directors

C) Occupational License

D) Annual Report as filed with the Department of State

E) Commercial Application for Reclaim Water Service (If applicable)

3.1.3 New Service Connection

New service connections shall require the payment of applicable connection charges and service connection fees.

Service Connection Fees are determined as follows:

A) Residential: Residential connection applications must be completed by the customer and signed. Residential connection charges are calculated by Customer Service. Additional fees for line extensions shall be calculated based on actual costs and may include, but not limited to, permits, jack and bores, directional drilling, main taps, and piping. Any cost above the standard service connection fee shall be charged to the applicant. If residential connections have special conditions or problems, Customer Service will complete the connection application with the proper charges.

B) Non-Residential: Connection charges for non-residential connections shall be calculated in accordance with Sections 4.2 and 4.3 of this MANUAL.

New service connections shall be processed at the Utilities Customer Services' New Services Desk located at the Utilities Administration Building. When a request for service is received, including all applicable forms and documentation, and fees paid, the account shall be set up for connection and the meter installed usually within ten business days. A new account fee to cover the expenses of setting up the new account and a meter set fee to pay for the cost of the meter and its installation, shall be assessed and a deposit collected in accordance with Section 3.2 of this MANUAL. Meters which are 2-inches and smaller shall be installed within a reasonable time period after an application for new service is received by Customer Service and the required fees and charges are paid to PCU. Installation of meters larger than 2-inches, which are approved by PCU, shall be coordinated through PCU and installed by the Developer's Contractor.

All fees and charges described herein shall be established by a separate BOCC approved resolution. All fully executed documents, forms, and other necessary information, as required by Sections 3.1.1 and 3.1.2 of this MANUAL, shall be provided to PCU. Two forms of identification, including a photo-identification, shall be required to set up a new service. A state issued drivers license and social security card shall be the preferred means of identification.

UTILITIES ADMINISTRATION MANUAL

3.2 Account Deposits

The PCU standard for establishing deposits shall be that deposits will be calculated to recover two and one-half times the average monthly bill of the customer. Account deposit requirements may be changed in accordance with a separate BOCC approved resolution.

New account deposit requirements for residential customers shall be based on two and one-half times the average monthly billing for all residential customers. This shall be calculated periodically and adjusted as determined appropriate. Newly calculated deposit requirements shall only apply to new customers and customers shut off for non-payment after the date the new deposit rate is effective.

New service account deposit requirements for non-residential customers shall be calculated as two and one half times the projected average monthly bill as determined in the connection fee calculations provided by the Development Review Staff within the Growth Management Department.

Existing service deposit requirements for non-residential customers shall be calculated either by taking the higher of:

A) The current standard residential deposit,

B) Four times the base charge for the meter set on the account, or

C) Two and one-half times the highest monthly billing from the preceding 12 calendar month period from the previous customer at that location if it is a similar use or as calculated by the Development Review Staff within the Growth Management Department.

3.2.1 Blanket Deposits

Blanket deposits are accepted for companies and individuals with long term multiple services. Deposits are held on a master account, thereby eliminating the need to place a deposit for each individual service address. Blanket deposits may be evaluated and revised as necessary based on the number of average active accounts and/or credit history.

3.2.2 Record of Deposits

PCU shall issue a receipt of deposit to each applicant from whom a deposit is received, and shall provide means whereby a depositor may establish claim if the receipt is lost. A record of each deposit will be maintained until refunded.

3.2.3 Transfer of Deposits

Deposits are non-transferable, except as provided for in Section 3.31 of the MANUAL, and will be applied to the final bill upon disconnection of service.

3.2.4 Refund of Deposits

If service is not connected or after termination of service, PCU shall refund the customer's deposit in excess of unpaid bills for service furnished.

3.2.5 Good Credit Deposit Refunds

If a customer maintains a 24 month perfect payment history, the customer's deposit will be refunded by applying it to their current billing.

3.3 Customer Requested Changes to Service

3.3.1 Transfer of Service on Residential Accounts

Residential customers relocating within a PCU service area may transfer their service and deposit to their new residence, provided the following guidelines are met:

A) A request for a deposit transfer must be requested by the customer on file.

B) A maximum five calendar day grace period exists between opening the new service and closing the previous service.

C) The deposit transfer will be made to an account being established in the same name.

D) All appropriate charges must be paid at the time of the transfer.

E) The customer must have had a good credit record with PCU (no disconnections due to nonpayment and no bad checks) for the preceding twelve months.

F) The transfer of the old deposit will be accompanied by a change to the current deposit limit as established by a separate BOCC approved resolution, if applicable.

3.3.2 Name Changes for Existing Account Holders

A name change on an account will be granted only in the case of the following circumstances:

A) An existing customer (account holder) requesting a name change on their account due to a change in marital status is required to provide PCU with a copy of their marriage license or other legal documentation confirming the name change.

B) A request for a name change on an account due to a divorce settlement where properties are awarded to one spouse will require copies of said divorce decree document. Alternatively, a notarized statement (forms are available at our service offices) from the existing account holder relinquishing the deposit and responsibility for the account balances to the new account holder, and a notarized statement from the new account holder accepting the responsibility for the account will also be accepted, along with a completed deposit application.

C) Due to death, a request for a name change from a deceased existing account holder's name to a surviving spouse's name will require a copy of the death certificate listing the requesting party as the survivor.

3.3.3 Temporary Disconnection for Seasonal Absence

At the request of a residential customer, service may be temporarily disconnected to accommodate a seasonal absence. A temporary disconnection charge is incurred when the service is shut off and locked. Monthly base charges will be assessed to each service at the location. Upon the request of the customer, service will be restored on the date requested (or nearest business day before requested date). A reconnection charge will be incurred when service is restored.

3.3.4 Changing Water Meter Size

PCU will consider upgrading/downgrading existing water meters upon receipt of a written request from the customer to the Utilities Customer Services Section which states their existing meter size and the desired new meter size. The request shall be forwarded to the Development Review (Utilities Engineering) Staff within the Growth Management Department for review and comment. If the request is found to be approvable, they will notify the Utilities Customer Services Section to proceed if the meter size is two inches or less. If the meter size requested is larger than two inches and approved by the Development Review (Utilities Engineering) Staff within the Growth Management Department, the Utilities Customer Services Section shall inform the customer of the approved meter size and instruct the customer to hire a contractor to install the new meter and approved cross connection control assembly in accordance with the "Utilities Standards and Specifications Manual" of the Polk County Utilities Code. The installation of the meter must be coordinated with PCU by the customer so the new meter can be inspected and incorporated into the billing system.

The Development Review Staff within the Growth Management Department will review and assess the appropriate fees and charges to be collected. In the case of two inch and smaller meters, a work order to upgrade or downgrade a meter shall be executed on the same day that all charges are paid to PCU. The new meter will be installed within 20 calendar days once the appropriate sized meter is obtained by PCU.

3.3.5 Relocating Meters

Meters shall be set in accordance with a development's record drawings and the "Utilities Standards and Specifications Manual" of the Polk County Utilities Code. PCU may consider relocating a meter upon receipt of a written request from the customer that specifies the desired location and provides an appropriate justification. If approved by PCU, the appropriate charges will be assessed by PCU and collected from the customer prior to relocating the meters.

3.3.6 Account Termination

Existing accounts may be terminated by PCU at the request of the customer, due to nonpayment, bankruptcy, a new customer applying at the same address, or the return of mailed notices to the customer. A customer may request that the account be terminated in person, by mail, email, fax, or telephone only after providing sufficient proof of identification. A charge will be assessed for same day termination requests.

3.4 Meter Policies

3.4.1 Meter Readings

For the purpose of billing, PCU will electronically read each metered service location one time each month in order to obtain an actual reading of the meter odometer. Services are read by cycle number, route number, and sequence number.

If a regular reading can not be obtained on the scheduled read date, a second attempt will be made within two business days. If PCU is still unable to obtain the reading, the customer's reading will be estimated based on the customer's last three calendar months of consumption.

3.4.2 Obstructed Meters

PCU will assess a charge for a covered or obstructed meter, or when access by PCU staff is prevented in the following circumstances:

A) Access to a meter is denied to PCU by a locked fence around the utility service;

B) Access to a meter by PCU is prevented by placing or permitting an animal to be on the premises; or

C) Access to a meter by PCU is prevented by any other physical condition at the service location.

3.4.3 Meter Reading Verification

PCU shall electronically read each meter monthly for scheduled readings. If the customer requests verification of the reading, PCU will provide rechecks and access a

premise visit charge. A premise visit charge will be waived if the reading is found to be incorrect after verification.

3.4.4 Meter Field Test

At the customer's request, PCU will provide an onsite meter accuracy test for meters that are over two calendar years old. The meter must test within a 97 – 103% accuracy range to be deemed accurate.

Should any meter fail the standard accuracy test, no testing charge will be assessed, and adjustments will be made to billing as necessary.

If the meter is deemed accurate due to the test results, the customer will be assessed a meter test charge.

All new water meters are supplied by the manufacturer and are certified to meet accuracy standards. Therefore, if a request for an accuracy test is made and the meter is found to be accurate, a meter test charge will be assessed.

3.4.5 Meter Tampering

Any case of tampering with a meter installation, cutting locks or straps on services that have been terminated or disconnected for nonpayment, interference with the proper working of service, theft of service by any person on customer's premises, or any evidence of the same will result in the account holder being assessed the minimum tampering charge for the first occurrence, in accordance with Section 125.99 of the Florida Statutes, which provides for prosecution of violations of County ordinances. Each conviction of a tampering violation is punishable by up to a $500 fine and 60 calendar days in the County jail. PCU may also fine customers for tampering in accordance with a separate BOCC approved resolution. As this is a progressive charge based on number of offences, charges will be levied against each person or organization found tampering, not each service location.

In addition to the tampering charges, the customer will pay the reconnection charges, replacement costs of damaged parts and/or equipment, and the PCU estimated cost of water and/or wastewater usage not recorded, based on the current rates.

When a meter has been removed for tampering and a new customer applies for service, the appropriate charges for installation of a meter will be assessed.

Section 812.14 of the Florida Statutes, as may be revised from time to time, further provides for prosecution of any person(s) who willfully alter, tamper with, knowingly make any connection with, use or receive the benefit from, etc., a public utility service.

3.4.6 Temporary Construction Meters

Temporary construction meters must first be approved by the Development Review Staff within the Growth Management Department. Temporary construction meters will be billed in accordance with the non-residential 2-inch or 4-inch meter rate, plus consumption. Temporary service may not exceed a period of six calendar months for a 2 inch meter or 45 calendar days for a 4 inch meter without submitting a time extension request to PCU at least 10 business days in advance.

3.4.7 Irrigation Meters

It shall be PCU's policy that either reclaimed water or the lowest quality water available from PCU shall be used for irrigation purposes. If reclaimed water is available to the customer, irrigation utilizing potable water shall be prohibited. All water supplied by PCU that is used for irrigation, regardless of its source, shall be metered.

3.5 Billing and Collection Practices

3.5.1 Monthly Billing

Monthly statements and e-notification are produced within two calendar weeks of the meter being read. The statement shows the prior balance and the detailed charges for the current billing as well as what the bill will be after the due date.

3.5.2 Late Payment Charge

Unpaid utility accounts will be assessed late charges and rendered a final notice for payment on the 21st day after the billing date. This notice will state the past due amount, the late charge assessed, and the date payment must be received to avoid termination/disconnection of service (seven calendar days from date of notice). Upon customer request, one late charge per 12 calendar month period may be waived on an account as a courtesy. Accounts with an overall general bad credit history may be denied this courtesy.

3.5.3 Non- Payment Service Disconnections

If an account remains unpaid seven days after the date of the final notice for payment (28 calendar days after the original billing date), the account will be eligible for disconnection. Each account is reviewed individually. Accounts that have been active for at least one calendar year, with no previous disconnections during the past 12 calendar months, no returned checks, and no amounts due for over 60 calendar days, will be given a one-time courtesy exemption from the scheduled disconnection and charges, and will be notified by mail of this one-time exemption. Accounts for which payments are received in the drop box, via internet, or Interactive Voice Response System (IVR) prior to the start of business on the scheduled disconnection day will also be excused. Accounts with a balance of less than $40 and less than 30 calendar days past due will not be considered for shut off.

Upon disconnection, the account will be assessed a disconnection charge. Restoration of service to a disconnected account will not be made until all delinquent balances and charges, together with a reconnection charge, are paid in the office or specific payment arrangements are made by the account holder with PCU. Two or more scheduled disconnections during a 12 calendar month period may result in an increased deposit being required of the customer.

3.5.4 Returned Checks and Bank Drafts

Each check or bank draft returned to PCU without payment will be charged against the customer's account, together with a returned check charge. The customer is notified of a returned check/bank draft by mail and allotted five business days from the date of the letter to pay the check/bank draft and returned check charge with cash, money order, or credit card. If a returned check is payment for a reconnection or deposit, the customer is notified by door hanger and interruption of service will occur immediately. Failure to redeem a returned check by the date referenced in the letter will result in disconnection of utility service. If service is disconnected for nonpayment, the customer will incur the applicable reconnection charges to restore service after the charges are paid in full.

If the check/bank draft and returned check charges are not satisfied by customer, the account will be terminated seven calendar days after the disconnection of service. The balance of the account (including the returned check amount) will be forwarded to a collection agency within the time frame allowed in accordance with collection guidelines.

A) Returned checks for payment of new deposits, or reconnection charges charged due to nonpayment will result in the service being disconnected the next business day after the returned check is received, and another reconnection charge is then incurred. All charges must be paid before service is restored.

B) Returned checks for taps follow the above guidelines except when the meter has been set and the check is not satisfied with ten business days, a work order will be placed to remove the meter, and an additional meter installation charge will be required to reset the meter. If the meter has not been set, all work orders will be held until all charges are satisfied.

C) Three or more returned checks/bank drafts will result in the account being placed on "check violation" and the account must be paid by cash, money order, or credit card. Accounts in "returned check violation" status will be subject to increased deposits. Accounts will remain on "returned check violation" until a clean credit history is maintained for one calendar year and the customer requests that their account status be reviewed.

3.6 Customer Payment Options

3.6.1 Walk-In Payments

Customer payments are accepted at our main office and other County approved payment locations Monday through Friday, during normal business hours. Payments are accepted in cash, check, money order, or credit card form. PCU accepts VISA, MasterCard, and American Express debit and credit cards.

3.6.2 Drop Box Payments

A drop box is located at our main office for customer convenience which accepts checks and money orders. Daily pick ups will occur at 8:00 a.m. each business day and will be posted that same day. Payments received after 8:00 a.m. will be applied the next business day.

3.6.3 Payments by Automated Bank Draft

PCU offers customers the ability to pay bills by automatic bank draft. Applications for this service can be obtained at PCU offices, by fax, or e-mail. When a completed application is received, PCU will work directly with the bank to set up the monthly automatic bank draft, and advise the customer on the utility billing through monthly statements. The statement will notify the customer of the amount of their bill, the amount to be deducted from the bank account bank account (total amount due), and the date payment will be deducted from the bank account (due date). The bank will also advise their customer through the monthly bank statement of all bank draft payments.

3.6.4 Interactive Voice Response System (IVR)

PCU offers 24-hour telephone account access to customers. By dialing into the Interactive Voice Response System, customers may access their account information, make credit card payments, and obtain other pertinent information.

3.6.5 Internet Account Access

PCU offers customer Internet account access to their accounts. By requesting a pin number by e-mail and logging onto the website, customers may access their accounts, make credit card payments, and obtain other pertinent information.

UTILITIES ADMINISTRATION MANUAL

4.0 ADMINISTRATIVE POLICIES

4.1 Adjustments to Customer Accounts

4.1.1 Non-Beneficial Use

A) Leaks:

PCU will consider individual accounts for adjustments when non-beneficial consumption is reported by the customer. The customer must provide PCU with a written request for an adjustment due to non-beneficial use, together with a statement explaining how the leak was discovered and proof that the leak was repaired. Requests may not be considered if all required items are not received by PCU.

Adjustments for non-beneficial use will be granted on water and/or wastewater for no more than two consecutive calendar months' consumption. If granted, the monthly bill(s) will be adjusted to the average of the monthly consumption for the preceding 12 calendar month period, including the protested reading(s). Adjustments for non-beneficial use and rate adjustments will be granted only one time per 18 calendar month period.

B) Irrigation Systems:

Adjustments for water losses related to irrigation systems will not be considered for consumption adjustment; however, PCU will consider doing a rate adjustment reducing a customer bill from the highest conservation penalty to the cost recovery tier if a customer can provide PCU with a written request to do so with proof that they have repaired their irrigation system and reduced their irrigation level to their typical pattern.

C) Other Adjustments:

Upon receipt of a written claim by a customer that metered water was not received, the DIRECTOR may authorize an adjustment to the monthly billing. Where PCU finds that because of a casualty to a line or other fixture, the customer did not receive beneficial use of the metered water, an adjustment of the monthly bill to the average of the monthly billings for the preceding 12 calendar month period, including the protested reading, may be authorized.

4.1.2 Non-Residential Wastewater Charges due to Pool Fills or Other Non-Wastewater Producing Uses

Any non-residential monthly wastewater charge that is based on metered water service will be considered for a wastewater credit adjustment due to a pool fill or other use in which wastewater is not produced once per 12 calendar month period. Documentation to support the customer's request for adjustment request should include a letter explaining the request and documentation of the size of the pool.

4.1.3 Back Charge

Adjustments for beneficial usage of services and flow will be applied when service has been rendered but not billed. Charges will be calculated at the rate in effect at the time the service was rendered.

Adjustments for over billing errors are limited to 12 calendar months of correction. All other adjustments must be approved by the BOCC.

4.1.4 Late Fees

Upon customer request, one late charge per 12 calendar month period may be waived on an account as a courtesy. Accounts with an overall general bad credit history may be denied this courtesy.

4.1.5 Liens and Remedies for Non-Payment of Service

Subject to the provisions of F.S. 125.485, if the fees, rates or charges for the services and facilities of the PCU water, wastewater and reclaimed water systems shall not be paid as and when due, and shall be in default for 30 days or more, then the unpaid balance thereof, together with attorneys' fees and costs, may be recovered by the COUNTY in a civil action, by recording of a Notice of Lien, by referring the delinquent account to a collection agency, or a combination thereof. In the event the delinquent account holder is the owner of the property to which utility service was provided, a Notice of Lien, in such form as the Board of County Commissioners shall determine appropriate, may be filed in the office of the Clerk of the Circuit Court of Polk County, Florida and shall be recorded as other liens are recorded. Any such lien, upon recording, shall be constructive notice of such lien and may be foreclosed or otherwise enforced by the COUNTY by action or suit in equity. Any lien provided for in this section shall accrue interest at the statutory rate, as provided for in F.S. 687.01 and F.S. 55.03 as amended from time to time, from the date of recording. Such interest as provided for in this Section shall also constitute a lien against the property assessed of equal dignity to that of the underlying lien.

4.2 Connection Charges

4.2.1 Water and wastewater connection charges, as revised from time to time by a separate Resolution adopted by the BOCC and made part of the "Utilities Administration Manual", shall be imposed for each structure that requires an

individual Building Permit and/or Certificate of Occupancy to be issued by the Building Official, regardless of ownership unless exempted by State or Federal statutes. All other connections to the PCU system shall also be subject to connection charges. The purpose of these charges shall be to offset the costs of providing utility service. The charges shall be based on the structure's or connection's estimated amount of required utility service capacity as determined by PCU utilizing the Connection Charge Calculation Methodology contained in the "Utilities Administration Manual". Changes to the Connection Charge Calculation Methodology shall be accomplished by a separate BOCC adopted Resolution.

4.2.2. A minimum of one (1) ERC shall be assessed for each portion of a development, business, structure, or other use that requires the issuance of a building permit. Calculations above one (1) ERC shall be rounded up to the nearest quarter of an ERC, i.e., 1.25, 1.50, 1.75, etc.

4.2.3. All water and wastewater connection charges, service charges, and costs shall be paid in full no later than the date of issuance of the Certificate of Occupancy. When no Certificate of Occupancy is to be issued, such charges shall be paid in full prior to the use's connection to a PCU utility system. For residential subdivisions, connection charges may not be paid and service may not be obtained prior to plat approval.

4.2.4. Only prospective customers seeking connection to the PCU system as a result of government mandate or court order may, upon proper application and in accordance with law, pay applicable connection charges over a period of time pursuant to Board policy and administrative procedures.

4.2.5. Nonpayment of connection charges as set forth herein may result in penalty charges, liens being placed upon the property receiving service, and/or discontinuation of service.

4.3 Connection Charge Re-Assessments

When a new customer application for an existing non-residential service is received, Customer Service shall forward the application to the Development Review Staff within the Growth Management Department for its review and connection fee assessment for any potential additional impact to the system(s).

When an existing non-residential customer submits interior or exterior improvement plans to the Growth Management Department, the Development Review Staff within the Growth Management Department shall review the existing connection fee amounts on file and assess additional connection fees as required.

If it is found that the system will incur additional impacts, the new applicant or existing customer shall be required to pay all additional connection charges at the time of service in accordance with the Connection Charge Calculation Methodology in effect at the time of the

current assessment and the procedures established within this Manual unless otherwise specified in a Utilities or Developer's Agreement. In the NERUSA, connection charges shall be due upon Level 2 approval unless otherwise specified in a Utilities or Developer's Agreement.

The County reserves the right to review, on an annual basis, any customer's actual water use based on water meter records. If PCU finds that the maximum moving three month average daily flow is a minimum of 25 percent greater than the capacity currently paid for the customer (i.e., connection charge paid), PCU shall bill the customer for the additional water and wastewater connection charges due. The additional connection charges will be computed based on the prevailing connection charge rates in effect at the time of review and in accordance with the provisions set forth in this MANUAL. The additional connection charges will be paid in accordance with the provisions set forth in this MANUAL.

4.4 Specialized Services

4.4.1 Premise Visit

When a visit to the meter location is requested by the customer and the visit is outside of the normal and routine preventative maintenance service provided by PCU, a premise visit charge shall be assessed.

4.4.2 Same Day and Overtime Service

Any service calls requested by a customer before 2:30 p.m. for that same day, or service calls that require PCU to provide service outside of normal business hours, will result in an additional same day or overtime service charge, as applicable.

4.4.3 Emergency After Hours Service Turn-Ons

Requests for the turn-on of service after normal business hours will be granted only when "emergency" circumstances exist. Nonpayment of utility bills does not constitute an emergency.

4.4.4 Walk Through Service

The walk-through service is available to realtors and potential customers so they may test the plumbing fixtures in a property they may be purchasing or leasing. This service requires a premise visit charge to be paid in the office before a work order is initiated for the next business day, excluding Fridays and days before a holiday. Turn-ons and shut-off will take place within a 24-hour period.

Emergency turn-on of service will incur a premise visit charge and overtime service charge, in addition to any charges applicable to the service being turned off as a result of disconnection for nonpayment, new customer, or temporary disconnection for absence.

UTILITIES ADMINISTRATION MANUAL

4.5 Unlawful Discharges into Wastewater Systems

No person shall discharge or cause to be discharged any storm water, surface water, ground water, roof runoff, subsurface drainage, contaminated cooling water, swimming pool filter backwash, water softener, filter backwash, polluted industrial process waters, or any un-metered liquids to any PCU wastewater collection or transmission system. Any property owner or customer that allows or causes such a discharge to occur shall cease such discharge immediately upon formal notice by PCU. PCU shall charge the property owner or customer for all estimated flows resulting from such discharge. Additional enforcement actions shall be taken in accordance with this MANUAL and regulatory rules and regulations as adopted by separate Resolutions as adopted by the BOCC.

UTILITIES ADMINISTRATION MANUAL

APPENDIX A-100 December 2010

1.0 RATES, FEES, AND CHARGES

1.1 BULK RATE SERVICE

PCU provides bulk rate service to other utilities at the current rates as established by County resolution, or by agreement.

1.2 RATE, FEE, AND CHARGE SCHEDULES

Rates, fees, and charges shall be adopted by separate County resolution or ordinance and shall be amended to meet the needs of PCU. The schedules made part of this Manual shall be amended from time to time by separate BOARD approved resolutions.

SERVICE CHARGES AND PENALTIES

1) New Account Charge or Administrative Charge
   3/4 – 2-inch Meter.....$55.00
   Larger than 2-inch Meter $70.00

2) Same Day or Overtime Charge.....$80.00

3) Late Payment Charge.....$6.00
   or 5% or payment due, whichever is greater

4) Returned Check or Draft Charge
   For checks $50.00 or less.....$25.00
   For Checks $51.00 to $300.00…….$30.00
   For Checks $301.00 or more…… $40.00
   or 5% of face value, whichever is greater

5) Premise Visit Charge $60.00

6) Disconnection for Nonpayment Charge
   Less than 2” meter $60.00
   2” meter and above……..$105.00

7) Temporary Absence Disconnection Charge
   3/4-inch Meter Only.....$60.00
   Though services is shut off the customer continues to pay the monthly base charge

8) Service Restoration/Reconnection Charge
   Less than 2” meter $60.00
   2” meter and above $105.00

APPENDIX A-100 December 2010

9) Meter Installation Charge
- 3/4-inch Meter.....$450.00
- 1-inch Meter.....$550.00
- 1-1/2-inch Meter $900.00
- 2-inch Meter.....$1,415.00
- Larger than 2-inch Meter .....Actual Cost

10) Temporary Meter Installation Charge
- 2-inch Meter on Hydrant.....$105.00
- Installation Requiring Line Tap $195.00

11) Meter Exchange Charge (for Size Change)
- 3/4-inch Meter.....$450.00
- 1-inch Meter.....$550.00
- 1-1/2-inch Meter $900.00
- 2-inch Meter.....$1,415.00
- Larger than 2-inch Meter .....Actual Cost

12) Meter Test Charge
- 3/4-inch Meter.....$90.00
- Larger than 2-inch Meter .....Actual Cost

13) Penalty for Meter Tampering/Theft of Service ..... $100.00 up to $1,000.00 plus damage repair and replacement costs
- 1st Infraction $100.00
- 2nd Infraction $500.00
- 3rd Infraction $1,000.00

14) Penalty for Obscured Meter.....$60.00

15) Penalty for Connection to Other Potable Water Supply System $500.00

16) Penalty for Cross-Connection.....$500.00

17) Wastewater Pretreatment Rates, Charges, and Fees shall be applied pursuant to Section 12.0, contained in Reference Manual 6(E), "Industrial Wastewater Industrial Pretreatment Policy Manual", Polk County Utilities Code, most recent edition.

18) Relocate Meter.....$175.00
Above 3/4" – time/labor materials

UTILITIES ADMINISTRATION MANUAL

APPENDIX A-100 December 2010

19) Water Audit $75.00

20) Reclaimed Water Follow-up Inspection $60.00

21) Cross Connection Control Assembly Test (Municipal Charge)
¾" to 2" Meter $90.00
2" Meter and above.....Actual Cost

22) Deposits
Residential
Water……..……$75.00
Wastewater……..….$110.00
Reuse……..……$40.00
Combined Services….. add amounts above for each service at customer location

Commercial
Two and one-half times the estimated monthly bill for all services at the service location

Residential Water, Wastewater, and Reclaimed Water Rates

RESIDENTIAL WATER RATES					
Effective Date	12/1/2007	10/1/2008	10/1/2009	10/1/2010	10/1/2011
Indexing Rate	N/A	5%	5%	5%	5%
Base Charge	$ 6.89	$ 7.23	$ 7.59	$ 7.97	$ 8.37
Usage Block Ranges (in thousands of gallons)	-	-			
0 – 3	$ 1.30	$ 1.37	$ 1.44	$ 1.51	$ 1.59
4 – 10	$ 1.73	$ 1.82	$ 1.91	$ 2.01	$ 2.11
11 – 20	$ 3.46	$ 3.63	$ 3.81	$ 4.00	$ 4.20
21 – 30	$ 5.19	$ 5.45	$ 5.72	$ 6.01	$ 6.31
31 – 40	$ 6.92	$ 7.27	$ 7.63	$ 8.01	$ 8.41
Over 40	$ 12.11	$ 12.72	$ 13.36	$ 14.03	$ 14.73

RESIDENTIAL WASTEWATER RATES					
Effective Date	12/1/2007	10/1/2008	10/1/2009	10/1/2010	10/1/2011
Indexing Rate	N/A	5%	5%	5%	5%
Base Charge	$ 25.68	$ 26.96	$ 28.31	$ 29.73	$ 31.22
Usage per thousand gallons up to 7,000 gallons	$ 4.61	$ 4.84	$ 5.08	$ 5.33	$ 5.60

UTILITIES ADMINISTRATION MANUAL

APPENDIX A-100 December 2010

RESIDENTIAL RECLAIMED WATER RATES

Effective Date	12/1/2007	10/1/2008	10/1/2009	10/1/2010	10/1/2011
Indexing Rate	N/A	5%	5%	5%	5%
Reuse Water Base Charge	N/A	N/A	N/A	N/A	N/A
Usage Block Ranges (in thousands of gallons)					
0 – 20	$ 1.00	$ 1.05	$ 1.10	$ 1.16	$ 1.22
21 – 30	$ 3.00	$ 3.15	$ 3.31	$ 3.48	$ 3.65
31 – 40	$ 4.00	$ 4.20	$ 4.41	$ 4.63	$ 4.86
Over 40	$ 6.00	$ 6.30	$ 6.62	$ 6.95	$ 7.30

COMMERCIAL/MULTI-FAMILY WATER RATES

Effective Date	12/1/2007	10/1/2008	10/1/2009	10/1/2010	10/1/2011
Indexing Rate	N/A	5%	5%	5%	5%
5/8" & 3/4" Base Charge	$ 10.33	$ 10.85	$ 11.39	$ 11.96	$ 12.56
5/8" & 3/4" Usage Block Ranges (in thousands of gallons)					
0 – 15	$ 1.73	$ 1.82	$ 1.91	$ 2.01	$ 2.11
16 – 30	$ 3.46	$ 3.63	$ 3.81	$ 4.00	$ 4.20
31 – 60	$ 6.92	$ 7.27	$ 7.63	$ 8.01	$ 8.41
over 60	$ 12.11	$ 12.72	$ 13.36	$ 14.03	$ 14.73
1" Base Charge	$ 17.21	$ 18.07	$ 18.97	$ 19.92	$ 20.92
1" Usage Block Ranges (in thousands of gallons)					
0 – 25	$ 1.73	$ 1.82	$ 1.91	$ 2.01	$ 2.11
26 – 50	$ 3.46	$ 3.63	$ 3.81	$ 4.00	$ 4.20
51 – 100	$ 6.92	$ 7.27	$ 7.63	$ 8.01	$ 8.41
over 100	$ 12.11	$ 12.72	$ 13.36	$ 14.03	$ 14.73
1-1/2" Base Charge	$ 34.43	$ 36.15	$ 37.96	$ 39.86	$ 41.85
1-1/2" Usage Block Ranges (in thousands of gallons)					
0 – 50	$ 1.73	$ 1.82	$ 1.91	$ 2.01	$ 2.11
51 – 100	$ 3.46	$ 3.63	$ 3.81	$ 4.00	$ 4.20
101 – 200	$ 6.92	$ 7.27	$ 7.63	$ 8.01	$ 8.41
over 200	$ 12.11	$ 12.72	$ 13.36	$ 14.03	$ 14.73

UTILITIES ADMINISTRATION MANUAL

APPENDIX A-100 December 2010

2" Base Charge	$ 55.08	$ 57.83	$ 60.72	$ 63.76	$ 66.95
2" Usage Block Ranges (in thousands of gallons)					
0 – 80	$ 1.73	$ 1.82	$ 1.91	$ 2.01	$ 2.11
81 – 160	$ 3.46	$ 3.63	$ 3.81	$ 4.00	$ 4.20
161 – 320	$ 6.92	$ 7.27	$ 7.63	$ 8.01	$ 8.41
over 320	$ 12.11	$ 12.72	$ 13.36	$ 14.03	$ 14.73
3" Base Charge	$ 103.28	$ 108.44	$ 113.86	$ 119.55	$ 125.53
3" Usage Block Ranges (in thousands of gallons)					
0 - 150	$ 1.73	$ 1.82	$ 1.91	$ 2.01	$ 2.11
151 - 300	$ 3.46	$ 3.63	$ 3.81	$ 4.00	$ 4.20
301 - 600	$ 6.92	$ 7.27	$ 7.63	$ 8.01	$ 8.41
over 600	$ 12.11	$ 12.72	$ 13.36	$ 14.03	$ 14.73
Effective Date	12/1/2007	10/1/2008	10/1/2009	10/1/2010	10/1/2011
Indexing Rate	N/A	5%	5%	5%	5%
4" Base Charge	$ 172.14	$ 180.75	$ 189.79	$ 199.28	$ 209.24
4" Usage Block Ranges (in thousands of gallons)					
0 - 250	$ 1.73	$ 1.82	$ 1.91	$ 2.01	$ 2.11
251 - 500	$ 3.46	$ 3.63	$ 3.81	$ 4.00	$ 4.20
501 - 1,000	$ 6.92	$ 7.27	$ 7.63	$ 8.01	$ 8.41
over 1,000	$ 12.11	$ 12.72	$ 13.36	$ 14.03	$ 14.73
6" Base Charge	$ 344.28	$ 361.49	$ 379.56	$ 398.54	$ 418.47
6" Usage Block Ranges (in thousands of gallons)					
0 - 500	$ 1.73	$ 1.82	$ 1.91	$ 2.01	$ 2.11
501 - 1,000	$ 3.46	$ 3.63	$ 3.81	$ 4.00	$ 4.20
1,001 - 2,000	$ 6.92	$ 7.27	$ 7.63	$ 8.01	$ 8.41
over 2,000	$ 12.11	$ 12.72	$ 13.36	$ 14.03	$ 14.73
8" Base Charge	$ 550.85	$ 578.39	$ 607.31	$ 637.68	$ 669.56
8" Usage Block Ranges (in thousands of gallons)					
0 - 800	$ 1.73	$ 1.82	$ 1.91	$ 2.01	$ 2.11
801 - 1,600	$ 3.46	$ 3.63	$ 3.81	$ 4.00	$ 4.20
1,601 - 3,200	$ 6.92	$ 7.27	$ 7.63	$ 8.01	$ 8.41
over 3,200	$ 12.11	$ 12.72	$ 13.36	$ 14.03	$ 14.73

UTILITIES ADMINISTRATION MANUAL

APPENDIX A-100 December 2010

10" Base Charge	$ 791.89	$ 831.48	$ 873.05	$ 916.70	$ 962.54
10" Usage Block Ranges (in thousands of gallons)					
0 - 1,150	$ 1.73	$ 1.82	$ 1.91	$ 2.01	$ 2.11
1,151 - 2,300	$ 3.46	$ 3.63	$ 3.81	$ 4.00	$ 4.20
2,301 - 4,600	$ 6.92	$ 7.27	$ 7.63	$ 8.01	$ 8.41
over 4,600	$ 12.11	$ 12.72	$ 13.36	$ 14.03	$ 14.73
12" Base Charge	$1,481.35	$1,555.42	$1,633.19	$1,714.85	$1,800.59
12" Usage Block Ranges (in thousands of gallons)					
0 - 2,150	$ 1.73	$ 1.82	$ 1.91	$ 2.01	$ 2.11
2,151 - 4,300	$ 3.46	$ 3.63	$ 3.81	$ 4.00	$ 4.20
4,301 - 8,600	$ 6.92	$ 7.27	$ 7.63	$ 8.01	$ 8.41
over 8,600	$ 12.11	$ 12.72	$ 13.36	$ 14.03	$ 14.73

COMMERCIAL/MULTI-FAMILY WASTEWATER RATES

Effective Date	12/1/2007	10/1/2008	10/1/2009	10/1/2010	10/1/2011
Indexing Rate	N/A	5%	5%	5%	5%
Base Charge 5/8" & 3/4" Meter	$ 38.52	$ 40.45	$ 42.47	$ 44.59	$ 46.82
Base Charge 1" Meter	$ 64.20	$ 67.41	$ 70.78	$ 74.32	$ 78.04
Base Charge 1-1/2" Meter	$ 128.40	$ 134.82	$ 141.56	$ 148.64	$ 156.07
Base Charge 2" Meter	$ 205.44	$ 215.71	$ 226.50	$ 237.82	$ 249.71
Base Charge 3" Meter	$ 385.21	$ 404.47	$ 424.69	$ 445.93	$ 468.23
Base Charge 4" Meter	$ 642.01	$ 674.11	$ 707.82	$ 743.21	$ 780.37
Base Charge 6" Meter	$1,284.03	$1,348.23	$1,415.64	$1,486.43	$1,560.75
Base Charge 8" Meter	$2,054.44	$2,157.16	$2,265.02	$2,378.27	$2,497.18
Base Charge 10" Meter	$2,953.26	$3,100.92	$3,255.97	$3,418.77	$3,589.71
Base Charge 12" Meter	$5,521.20	$5,797.26	$6,087.12	$6,391.48	$6,711.05
Usage Charge Per 1,000 Gallons	$ 4.61	$ 4.84	$ 5.08	$ 5.34	$ 5.60

COMMERCIAL/MULTI-FAMILY RECLAIMED WATER RATES

Effective Date	12/1/2007	10/1/2008	10/1/2009	10/1/2010	10/1/2011
Indexing Rate	N/A	5%	5%	5%	5%

UTILITIES ADMINISTRATION MANUAL

APPENDIX A-100 December 2010

Reclaimed Water Base Charge	N/A	N/A	N/A	N/A	N/A
Usage Block Ranges (in thousands of gallons)					
0 - 20	$ 1.00	$ 1.05	$ 1.10	$ 1.16	$ 1.22
21 - 30	$ 3.00	$ 3.15	$ 3.31	$ 3.48	$ 3.65
31 - 40	$ 4.00	$ 4.20	$ 4.41	$ 4.63	$ 4.86
Over 40	$ 6.00	$ 6.30	$ 6.62	$ 6.95	$ 7.30
Bulk Priority	$ 0.74	$ 0.78	$ 0.82	$ 0.86	$ 0.90
Bulk Interruptible	$ 0.31	$ 0.33	$ 0.35	$ 0.37	$ 0.39

RESIDENTIAL CONNECTION FEES

Effective Date	6/1/2008	10/1/2008	10/1/2009	10/1/2010	10/1/2011
Indexing Rate	91.0%	5%	5%	5%	5%
Type of Residence					
Single Family Detached Units on Lots of 1.0 Acre or Less	$ 2,340	$ 2,457	$ 2,580	$ 2,709	$ 2,844
Single Family Detached Units on Lots of More than 1.0 Usable Acre	$ 3,511	$ 3,687	$ 3,871	$ 4,064	$ 4,268
Multi-family Units Including Apartments, Condos, Duplexes, Triplexes, etc.	$ 1,287	$ 1,351	$ 1,419	$ 1,490	$ 1,564
Mobile Homes on Lots of Less Than 6000 Square Feet	$ 1,404	$ 1,474	$ 1,548	$ 1,625	$ 1,707
Mobile Homes on Lots of 6000 Square Feet or More	$ 2,340	$ 2,457	$ 2,580	$ 2,709	$ 2,844
Park Model RVs	$ 1,287	$ 1,351	$ 1,419	$ 1,490	$ 1,564
Destination RVs *	$ 1,287	$ 1,351	$ 1,419	$ 1,490	$ 1,564
All other RVs Including Transient RVs	$ 1,287	$ 1,351	$ 1,419	$ 1,490	$ 1,564
Effective Date	6/1/2008	10/1/2008	10/1/2009	10/1/2010	10/1/2011
Indexing Rate	1.0%	5%	5%	5%	5%
Type of Residence					
Single Family Detached Units on Lots of 1.0 Acre or Less	$ 3,451	$ 3,624	$ 3,805	$ 3,995	$ 4,195
Single Family Detached Units on Lots of More than 1.0 Usable Acre	$ 3,451	$ 3,624	$ 3,805	$ 3,995	$ 4,195

UTILITIES ADMINISTRATION MANUAL

APPENDIX A-100 December 2010

Multi-family Units Including Apartments, Condos, Duplexes, Triplexes, etc.	$ 2,312	$ 2,428	$ 2,549	$ 2,676	$ 2,810
Mobile Homes on Lots of Less Than 6000 Square Feet	$ 2,312	$ 2,428	$ 2,549	$ 2,676	$ 2,810
Mobile Homes on Lots of 6000 Square Feet or More	$ 3,451	$ 3,624	$ 3,805	$ 3,995	$ 4,195
Park Model RVs	$ 1,898	$ 1,993	$ 2,093	$ 2,197	$ 2,307
Destination RVs *	$ 2,312	$ 2,428	$ 2,549	$ 2,676	$ 2,810
All other RVs Including Transient RVs	$ 3,451	$ 3,624	$ 3,805	$ 3,995	$ 4,195

* NOTE:

A Destination RV must be: (1) Sited on a lot owned in fee simple by the user; (2) Sited in a park that is a platted subdivision; (3) Sited on a lot 3,000 square feet or larger: and (4) Sited in a park that does not have a dump station or undivided interest lot sales or time share lot sales. This category of user is subject to inspection by Polk County Utilities to ensure that Destination RVs are not transient RVs. Destination RV lots used by Transient RVs will be subject to a 1.0 ERC sewer connection charge.

COMMERCIAL CONNECTION FEES

Water Connection Fees

Commercial Water Connection Fees will be assessed in accordance with the PCU approved Connection Fee Calculation Methodology as contained within the Polk County Utilities Code. 360 gallons per day shall be considered to be the potable water usage of an Equivalent Residential Connection (ERC).

Wastewater Connection Fees

Commercial Wastewater Connection Fees will be assessed in accordance with the PCU approved Connection Fee Calculation Methodology as contained within the Polk County Utilities Code. 270 gallons per day shall be considered to be the wastewater flow generated by an Equivalent Residential Connection (ERC).

RECLAIMED WATER USE ACKNOWLEDGEMENT AND APPLICATION

Appendix B-100 December 2010

Applicant:

Billing Address: _____

Service Address: _____

Telephone Number: _____

Polk County Utilities processes reclaimed water that is available for certain purposes specified in Chapter 62-610, F.A.C., and the Polk County Utilities Code. Applicant acknowledges and agrees to comply with all applicable requirements, including but not limited to the following:

1. Use of reclaimed water shall be in strict compliance with all applicable laws and regulations.
2. The owner of the property where reclaimed water service is provided is responsible for the irrigation system downstream of the service connection (valve or meter).
3. Applicant agrees that in order for Polk County Utilities to inspect reclaimed water irrigation systems, or to monitor the quality of the potable water system, Polk County Utilities shall have the right to enter the premises of the reclaimed water customer, without further notice or consent, for the purpose of inspection and/or testing.
4. Applicant must have a permanent in-ground irrigation system which has been inspected by Polk County Utilities personnel and meets the following requirements:
    a. Hose bibs, faucets, or other connections that could permit usage of reclaimed water for any other purpose than to supply in-ground irrigation systems are not allowed.
    b. Irrigation systems may not be connected to any other source of water, including public or private potable water systems, lakes, streams, ponds, or wells, (potable or non-potable), etc,: except that bulk-interruptible customers may, after complying with certain specific conditions, utilize their own irrigation wells and storage ponds as backup supply. Interconnections to neighboring irrigation systems are not allowed.
    c. The irrigation system must be maintained in good working condition and must be adjusted properly to minimize spray onto roads, common sidewalks, gutters, neighboring property, or impervious surfaces that allow run-off. Over spray into swimming or wading pools is not allowed.
5. Reclaimed water may not be piped into any building that also receives potable water from any source.
6. Reclaimed water may not be used for bathing, drinking, or other sanitary purposes.
7. Reclaimed water may not be used to fill swimming pools, wading pools, hot tubs, or any other body of water where immersion might occur, except that Bulk-interruptible customers may fill reclaimed water storage ponds in accordance with applicable rules and regulations.
8. No person may operate valves or other Polk County Utilities owned and operated appurtenances, tamper with, alter, connect to, or damage the reclaimed water transmission/distribution system without written permission of the Utilities Director.

RECLAIMED WATER USE ACKNOWLEDGEMENT AND APPLICATION

Appendix B-100 December 2010

9. Polk County Utilities may discontinue service, temporarily or permanently, for any violation of law or regulation in the installation, operation and maintenance of the reclaimed water irrigation system, or for the convenience of Polk County Utilities.
10. It is advisable to schedule irrigation at times when the least human or animal contact is likely.
11. Polk County Utilities does not guarantee the supply or quality of the reclaimed water. Reclaimed water may not be available during certain hours, may be temporarily shut off without notice for repairs, maintenance, or other reasons, and supply quantities may be limited.
12. Polk County Utilities assumes no liability for any damage caused by or resulting from customer use of the reclaimed water.
13. Applicant agrees to pay for the reclaimed water at the prevailing rate according to the customer classification indicated (circle one):
    Retail Bulk-priority Bulk-interruptible
14. Description of intended use: _____
15. Area size (acres) of irrigation site: _____

I ACKNOWLEDGE THE TERMS AND CONDITIONS OF USE AND AGREE to comply with the terms and conditions of use as set forth above, and which may be amended from time-to-time. WITNESSETH:

_____	_____
Signature of Applicant	Signature of Witness
_____	_____
Print Name	Print Name
_____	_____
Print Address	Print Address
_____	_____
Date	Date

APPLICATION FOR WATER AND/OR WASTEWATER SERVICE

Appendix B-101 December 2010

WINTER HAVEN OFFICE: 1011 JIM KEENE BLVD
MAILING ADDRESS: PO BOX 2019 BARTOW, FL 33831
CUSTOMER SERVICE: PH: (863) 298-4100 Fax: (863) 298-4111

Please read and complete the information below. Indicate exactly how you would like the name on the account (one (1) name only). The following information is needed to establish your account with Polk County Utilities.

Please Print Legibly Please make checks payable to**: Polk County Utilities**

Customer Name: _____

Service Address: _____ City: _____ Zip: _____

(Please verify address is correct as additional charges could be incurred for corrections and/or trip charges)

Mailing Address (if different): _____

City: _____ State: _____ Zip: _____

Social Security# / Passport: _____ Driver's License #: _____

Local Phone: (_____) _____ Other Phone: (_____) _____

Date of birth_____ Spouse's Name: _____

Number of Occupants: _____ Purchase or Lease Date: _____

Date for Service to Begin: _____

Are you or your spouse a current or previous customer of Polk County Utilities? Yes ____ No ____

If yes, please provide service address or account number: _____

E-Mail address: _____

Polk County Utilities does require a deposit to establish an account. The deposit is non-negotiable or transferable between individuals. By this application the customer recognizes that Polk County Utilities is not responsible for loss or damage as a result of initiating service. It is further understood, failure to pay Polk County Utilities for services rendered could result in interruption of service and all associated fees would be required to reinstate said service. The Department reserves the right to assess late fees for payments rendered after the due date. Unfortunately, we are unable to provide the exact time of service connection.

Signature: _____ Date: _____ Owner [ ] Tenant [ ]

If Agent, Print Name: _____ Phone: (_____) _____

Blanket Deposit Master Account # (if applicable) _____

Credit Card #_____ EXP: _____ MC / VISA / AMEX

Last 3 digits on the back of the Card: _____ Billing Zip Code for Card: _____

APPLICATION FOR WATER AND/OR WASTEWATER SERVICE

Appendix B-101 December 2010

FOR OFFICE USE ONLY

CUSTOMER ID: _____
LOCATION ID: _____
CSR: _____

[ ] Phone
[ ] Mail
[ ] Office
[ ] Fax
[ ] Drop Box

[ ] Transfer Existing Customer
[ ] Blanket Deposit
[ ] Credit Card

INITIAL WF: _____
WATER: _____ FORCE OFF WF: _____
SEWER: _____ REUSE WF: _____
NAF: _____ (Non-refundable Fee)
SDS: _____ (Non-refundable Fee)
AH: _____

AUTHORIZATION FOR NAME CHANGE FORM

Appendix B-102 December 2010

Date: _____

Re: Service Address_____

Account Number_____

Please let this letter serve as authorization to transfer the deposit of $_____ in

the name of _____.

Located at _____

to_____.

I, _____, accept responsibility for the service, as

well as the deposit and all billings (past due, current, and future).

Our signature, as well as the notarization at the bottom of this page, gives Polk County Utilities the authority to change the name on this account as of this date.

Signed:_____

Social Security Number:_____
Driver License Number:_____
Date of Birth:_____

Signed:_____

Social Security Number:_____
Drivers License Number:_____
Date of Birth:_____

NOTE: NOT VALID UNLESS NOTARIZED

BANK DRAFT APPLICATION ONLY FORM

Appendix B-103 December 2010

What Is Automatic Bank Draft?

Automatic Bank Drafting is an efficient payment alternative to paper checks. When you use our Automatic Bank Drafting process, you authorize our company to electronically collect a pre-authorized amount from your checking account to pay a bill. So instead of writing a check every month, your bank will automatically make the payment. It's that simple.

Why Use Automatic Bank Draft?

Consumers and companies both benefit from Automatic Bank Drafting. As a consumer, you'll save time preparing your payment, save money on postage and check fees, improve your budgeting, eliminate the chance for late fee, and save time balancing your bank statement.

Questions Frequently Asked:

How long will it take after I fill out the enrollment form to begin paying my bill by Automatic Bank Drafting?

Enrollment is immediate. However, remember to keep making monthly payments until you see the confirmation message on your utilities statement, usually within 30 days.

Why do I need to attach a pre-printed, voided check to the enrollment form?

Attaching a pre-printed, voided check is required to ensure all bank account information is correct. It helps to avoid mistakes that may slow down the process.

What if I plan to change banks?

If you plan to change banks, just call our office promptly. You will be instructed to complete and sign a new enrollment form, attach a voided check from your new account and return it to us.

Will I continue to receive a monthly utility bill?

Yes, you will continue to receive your bill as usual. You will know the exact date and amount of payment before it is deducted from your account. If you have a question about your bill, you will need to call Polk County Utilities within 15 days of your bill date and get it resolved.

BANK DRAFT APPLICATION ONLY FORM

Appendix B-103 December 2010

Who will have control over my account?

You are the only person who has control over your account. When you sign up to pay your bill by Automatic Bank Drafting, you are not giving Polk County Utilities control over your account, you are simply authorizing for your utility bill payment to be made each month to Polk County utilities.

Automatic Bank Draft Service

We are pleased to offer Automatic Bank Draft service to you at no additional cost. Automatic Bank Draft can save you time and postage, as well as ensure that you monthly payment is made on time. Polk County Utilities will work directly with your bank and still keep you advised of your utility billing through a monthly statement. This statement will notify you of the amount of your utility bill, the amount to be deducted from your account (Total Amount Due), and the date (Due Date) payment will be deducted from your account. Your bank will also advise you through your monthly bank statement of all bank draft payments.

Paying by Automatic Bank Draft is especially convenient for people who travel, those who have multiple accounts to manage, or anyone with a hectic schedule. This method can benefit you by saving you the time to prepare and mail regular monthly payments. Paying by Automatic Bank Draft lets Polk County Utilities and your bank do this work for you.

Enrolling in our Automatic Bank Draft service is easy. Just complete and sign the attached authorization form. Return this form and a "voided" check from the account you wish to have drafted to Polk County Utilities. After you return these items to us, you will need to review your next bill to see if you will need to pay by check or not. After the first bill has been automatically deducted from your checking account all subsequent bill payments will be automatically deducted from your bank account on the due date shown on the monthly statement you receive from Polk County Utilities. Inquiries regarding bill amounts will neeed to be made within 15 days after the bill date. You may sign up for or discontinue the Automatic Bank Draft service anytime.

For additional information or if you have any questions about the new Automatic Bank Draft payment method, please call our customer service office at (863) 298-4100 or 1-(800) 301-6039 toll free, Monday-Friday, 8:00 a.m. – 5:00 p.m.

BANK DRAFT APPLICATION ONLY FORM

Appendix B-103 December 2010

*** Fax to: 863-298-4111 ***

AUTOMATIC BANK DRAFTING APPLICATION

Please Print

Customer Name: _____

Service Address: _____

City, State, Zip: _____

Home Phone: _____ Work Phone: _____

Polk County Utilities Account Number: _____

BANK INFORMATION:

Banking Institution Name: _____

Branch Address: _____

Routing Number *(9 digit number in lower left corner of your check):* _____

Checking Account Number: _____

(Return a *voided* check with application)

I authorize Polk County Utilities to initiate utility bill payment deduction from my checking account in the banking institution listed above. **I have attached a voided check.**

I understand the payment will be initiated approximately on the bill due date (20 days after the bill date). If the due date does not fall on a business day, the charge will be initiated on the first business day following the due date. I also understand any bill disputes or inquiries must be made with Polk County Utilities within 15 days of bill date.

This authorization is to remain in full force and in effect until Polk County Utilities and my banking institution have received written notification of its termination in such time and in such a manner as to afford both Polk County Utilities and my banking institution a reasonable opportunity (estimated to be 30 days) to act upon such termination.

I understand it is my responsibility to make sure there are sufficient funds in the account at all times to make the required payments.

Signature: _____ Date: _____

Signature: _____ Date: _____

NOTE: If joint account, both parties must sign.

APPLICATION FOR COMMERCIAL SERVICE

Appendix B-104 December 2010

THIS APPLICATION MUST BE COMPLETED AND SIGNED BY AN AUTHORIZED PERSON.

Account Name: _____

_____ _____
Service Address **Date for Service to Begin**

Mailing Address: _____

_____ Business Phone: (_____) _____-_____

Have you ever been a commercial customer of Polk County Utilities before? YES _____ NO _____

Business Name: _____

Business Address: _____

Owner Name: _____

DOB: _____/_____/_____ Federal Tax I.D. #:_____

SS#: _____-_____-_____

CONTACTS

Name & Title **Phone #**

_____ (_____)_____-_____

_____ (_____)_____-_____

I understand that utility charges are due when rendered and will pay all costs, charges and expenses, including reasonable attorney's fees for the collection of all unpaid balances. Deposits are based on usage and are subject to periodic review and adjustments. Customer signature indicates acknowledgement that connection fees will be evaluated by staff at least annually and if actual usage is greater than estimated, additional fees will be assessed in accordance with peak 3-month actual usage, the appropriate Ordinance, and current rates at that time.

_____ _____
Authorized Signature, Title, & Driver License Date

*** Fax to: 863-298-4111 ***

OFFICE USE ONLY

Account#_____ CSR_____
Water_____ Cash _____ WF_____
Sewer_____ Check/MO_____ NAF_____ C C _____
SDS_____ IVR _____

APPLICATION FOR COMMERCIAL SERVICE

Appendix B-104 December 2010

COMMERCIAL QUESTIONAIRE

Name of Business_____

What was facility previously used as? _____

What will facility be used for now?
_____

How many restrooms? _____ Is there a kitchen facility? _____

Is any construction necessary? _____ If so,
what_____

_____
_

We will contact you within 3 business days with your deposit quote.

OFFICE USE ONLY

Comments:
_____
_____
_____
_____
_____
_____

Deposit Quoted by: _____ _____
Date

INITIAL BLANKET DEPOSIT ACCOUNT APPLICATION

Appendix B-105 December 2010

MAIN OFFICE: 1011 JIM KEENE BLVD
MAILING ADDRESS: PO BOX 2019 BARTOW, FL 33831
CUSTOMER SERVICE: (863) 298-4100
FAX (863) 298-4111

Please read and complete the information below. Indicate exactly how you would like the name to read on the account. The following information is needed to establish your account with Polk County Utilities.

PLEASE PRINT LEGIBLY **PLEASE MAKE CHECKS PAYABLE TO: POLK COUNTY UTILITIES**

Customer (Billing) Name: _____

Mailing Address:

_____

City: _____ State: _____ Zip: _____

Identification: If Business, Tax ID: _____ Individual, SSN: _____

Contact Phone: (_____)_____ Other: (_____)_____

Fax (_____)_____ Approximate number of accounts at any given time: _____

Authorized Representatives to initiate and terminate service:

Name (please print)	Signature	Title
_____	_____	_____
_____	_____	_____
_____	_____	_____

Polk County Utilities does require a deposit to establish an account with the Department. The blanket deposit program was designed to enable companies and individuals with multiple services the convenience of holding a deposit on a "master" account. When service is/is not needed an authorized individual can fax a turn on/off request and the Administration Fee will be billed into the account (in case of turn on). By this application the customer recognizes that Polk County Utilities Department is not responsible for loss or damage as a result of initiating service. It is further understood, failure to pay Polk Count Utilities for services rendered could result in interruption of service and all associated fees (including additional deposit or termination from the blanket deposit program) would be required to reinstate said service. The Department reserves the right to assess late fees for payments rendered after the due date.

For Office Use Only

DEPOSIT AMOUNT: $_____ MASTER ACCT#_____

REQUEST FOR TERMINATION

Appendix B-106 December 2010

_____ _____

ACCOUNT NUMBER SERVICE ADDRESS

DATE SERVICE TO BE TURNED OFF: _____/_____/_____

*PCU MUST HAVE THIS NOTICE 24 BUSINESS HOURS BEFORE DATE REQUESTED OR ADDITIONAL FEES WILL BE CHARGED.

FORWARDING ADDRESS INFORMATION:

_____

ACCOUNT NAME TELEPHONE NUMBER

_____

STREET NAME CITY ST ZIP

I HEREBY REQUEST THAT MY SERVICE WITH POLK COUNTY UTILITIES BE TERMINATED ON THE DATE REQUESTED. I UNDERSTAND MY DEPOSIT WILL APPLY TO MY FIANL BILL. ANY BALANCE DUE/REFUNDS WILL BE MAILED TO THE ABOVE ADDRESS.

_____

SIGNATURE DATE

TAP APPLICATION

Appendix B-107 December 2010

POLK COUNTY UTILITIES
RESIDENTIAL
STAFF INITIAL_____

CUSTOMER SERVICE—ACCOUNT INFORMATION

CUST ID # _____ WSR# _____
LOC ID# _____ ROUTE# _____
WS# _____ CYCLE# _____
SS# _____ SUB# _____
RS# _____ S/T/R# _____
W/O# _____

APPLICANT INFORMATION

APPLICANT: _____

MAILING ADRESS: _____

CITY, STATE, ZIP: _____

TELEPHONE NUMBER: _____

S.S. # OR TAX ID NUMBER: _____

IF OTHER THAN APPLICANT, ACCOUNT TO BE BILLED TO THE FOLLOWING:
NAME: _____
MAILING ADDRESS: _____
CITY, STATE, ZIP: _____
TELEPHONE NUMBER: _____
SS# OR TAX ID NUMBER: _____

SERVICE INFORMATION:

SUBDIVISION NAME: _____

UNIT _____ BLOCK _____ LOT _____ LOT SIZE _____

TYPE OF UNIT _____

STREET ADDRESS: _____

CITY, STATE, ZIP: _____

WTR SYSTEM: _____ ERC'S: _____

SWR SYSTEM: _____ ERC'S _____

BY: _____ DATE: _____

NOTE: **WATER METER SET WILL TAKE 15-20 WORKING DAYS UNLESS ABNORMAL CONDITIONS EXIST**

TAP APPLICATION

Appendix B-107 December 2010

WATER CONNECTION FEES ESCROW YES NO :

_____ CONNECTIONS @ _____ EACH= _____
_____ METER INSTAL @ _____ EACH= _____
_____ WATER DEP @ _____ EACH= _____
_____ NEW ACCT @ _____ EACH= _____

SEWER CONNECTION FEES ESCROW YES NO :

_____ CONNECTIONS @ _____ EACH= _____
_____ SEWER DEP @ _____ EACH= _____

OTHER FEES OR CHARGE:

_____ SURCHARGE @ _____ EACH= _____

_____DIRECTIONAL BORE REQUIRED @ _____ =
_____

TOTAL AMOUNT DUE: _____

NON-RESIDENTIAL CONNECTION CHARGE CALCULATION METHODOLOGY

APPENDIX C-100 **ERC Calculation Form** December 2010

PLEASE TYPE OR PRINT CLEARLY IN BLACK INK

☐ Level II Estimate ☐ Final Calculation

Project Name: _____

PCU Project File Number: _____

NOTE: The project's Civil Engineer shall not execute the Final Calculation.

Architect / Mechanical Engineer (Plumbing) / Civil Engineer's Name:

_____

Architect / Mechanical Engineer (Plumbing) / Civil Engineer's Address:

_____

By executing this form, the project's design professional as indicated above certifies to PCU that he/she has made a professional level determination of the water and wastewater ERC's that are to be generated by the proposed project. The project's design professional shall not be required to place his/her professional seal on the Level II Estimate.

Architect / Mechanical Engineer (Plumbing) / Civil Engineer: (SEAL)

SIGNATURE: _____ DATE: _____

LDD/PCU Reviewer: _____ Date: _____

Approved: ____ Denied/Resubmit: ____

Comments:

_____
_____
_____
_____
_____
_____

NON-RESIDENTIAL CONNECTION CHARGE CALCULATION METHODOLOGY

APPENDIX C-100 **ERC Calculation Form** December 2010

Fixture Type (a) **(WATER)**	Fixture Unit Value	Number of Fixtures	FIXTURE UNIT VALUE TOTAL
Bath Tub	4		
Bidet	2		
Combination Fixture	4		
Dishwashing Machine (Domestic)	2.75		
Drinking Fountain	0.75		
Laundry Tray / Automatic Clothes Washer (b)	4		
Lavatory (Bathroom Sink)	2		
Shower	3		
Shower (Temperature Controlled)	3		
Sillcock/Hose Bib	5		
Service Sink	2.5		
Sink (Domestic)	3		
Urinal	15		
Water Closet (Flushometer Blowout Type)	35		
Water Closet (Flushometer Tank Type)	1.6		
Water Closet (Flushometer Siphonic Type)	25		
Water Closet (Tank Type, Close Coupled)	3		
Water Closet (Tank Type, One Piece)	6		
		FIXTURE UNIT VALUE TOTAL	

TOTAL WATER ERC'S:

FIXTURE UNIT VALUE TOTAL / (30 FIXTURE UNITS PER ERC) = _____

NON-RESIDENTIAL CONNECTION CHARGE CALCULATION METHODOLOGY

APPENDIX C-100 **ERC Calculation Form** December 2010

Fixture Type (c) **(WASTEWATER)**	Fixture Unit Value	Number of Fixtures	FIXTURE UNIT VALUE SUBTOTAL
Automatic Clothes Washer - Commercial	3		
Automatic Clothes Washer – Residential	2		
Bathroom Group (Lav., Tub / Shower, 1.6 gpf Water Closet) (d)	5		
Bathroom Group (Lav., Tub / Shower, >1.6 gpf Water Closet) (d)	6		
Bath Tub (with or without Overhead Shower or Whirlpool Attachments)	2		
Bidet	1		
Combination Sink and Tray	2		
Dental Lavatory (Bathroom Sink)	1		
Dental Unit or Cuspidor	1		
Dishwashing Machine (Domestic)	2		
Drinking Fountain	0.5		
Emergency Floor Drain	0		
Floor Drain (All Sizes)	2		
Floor Sink (1.5 Inch)	2		
Floor Sink (2 Inch)	3		
Floor Sink (2.5 Inch)	4		
Floor Sink (3 Inch)	5		
Floor Sink (4 Inch)	6		
Condensate Drains (e)	1		
Kitchen Sink - Domestic	2		
Kitchen Sink – Domestic with Food Waste Grinder and/or Dishwasher	2		
Laundry Tray (1 or 2 Compartments)	2		
Lavatory (Bathroom Sink)	1		
Shower	2		
Service Sink	2		
Sink	2		
Urinal	4		
Urinal ($\leq$ 1 gpf)	2		
Urinal (Non-Water Supplied)	0.5		
Wash Sink (Circular or Multiple) per Each Set of Faucets	2		
Water Closet (Flushometer Type, Public or Private)	4		
Water Closet (Private, 1.6 gpf)	3		
Water Closet (Private, >1.6 gpf)	4		
Water Closet (Public, 1.6 gpf)	4		
Water Closet (Public, >1.6 gpf)	6		
		FIXTURE UNIT VALUE TOTAL	

TOTAL WASTEWATER ERC'S:

FIXTURE UNIT VALUE TOTAL / (14 FIXTURE UNITS PER ERC) = _____

NON-RESIDENTIAL CONNECTION CHARGE CALCULATION METHODOLOGY

APPENDIX C-100 **ERC Calculation Form** December 2010

A minimum of one (1) Water or Wastewater ERC shall be assessed for each portion of a development, business, structure, or other use that requires the issuance of a building permit.

Calculation results above one (1) ERC shall be rounded up to the nearest quarter of an ERC, i.e., 1.25, 1.50, 1.75, etc.

a) Florida Plumbing Code 2007, Table 604.3 (as amended) where 1 gpm = 1 Fixture Unit Value.
b) Amended from Florida Plumbing Code 2007, Table 604.3 (as amended) to include the term "Automatic Clothes Washer".
c) Florida Plumbing Code 2007, Table 709.1 (as amended).
d) Bathroom Groups may or may not include a bidet and/or an emergency floor drain. All fixtures shall be located together on the same floor level.
e) Condensate Drains are not included in the Florida Plumbing Code 2007, Table 709.1 (as amended) but are included herein at a reduced fixture unit value to reflect flow to the sanitary sewer system.
f) For trench type drains, add one fixture unit value (per trap size) for every 10 linear feet of trench drain.
g) A showerhead over a bath tub or whirlpool bath tub does not increase the wastewater fixture unit valves.
h) Trap size shall be consistent with the fixture outlet size.
i) For the purpose of computing wastewater loads, water closets or urinals shall not be rated at a lower fixture unit value unless the lower values are confirmed by third party test results.
j) See Sections 709.2 through 709.4 of the Florida Plumbing Code 2007 (as amended) for methods of computing unit values of fixtures not listed or for rating of devices with intermittent flows.

NOTES:

REGIONAL UTILITY SERVICE AREAS

Appendix D-100 December 2010

Because of the large size and topographic diversity of Polk County, it is not practical to construct a single unified or a completely interconnected system of utility facilities. Therefore, individual Regional Utility Service Areas (RUSAs) were established for the purpose of planning for the provision of utility service to existing and future PCU customers. Within these RUSAs, PCU has the exclusive right to provide public potable water, reclaimed water, and wastewater utility service. Changes to the boundaries of the Regional Utility Service Areas shall be accomplished in accordance with State Statutes.

Each of the RUSAs is hereby described by the attached boundary maps and/or legal descriptions.

D-100-A	Central Regional Utility Service Area (CRUSA)
D-100-B	East Regional Utility Service Area (ERUSA)
D-100-C	Northeast Regional Utility Service Area (NERUSA)
D-100-D	Northwest Regional Utility Service Area (NWRUSA)
D-100-E	Southeast Regional Utility Service Area (SERUSA)
D-100-F	Southwest Regional Utility Service Area (SWRUSA)

POLK COUNTY UTILITIES DIVISION
CENTRAL REGIONAL SERVICE AREA

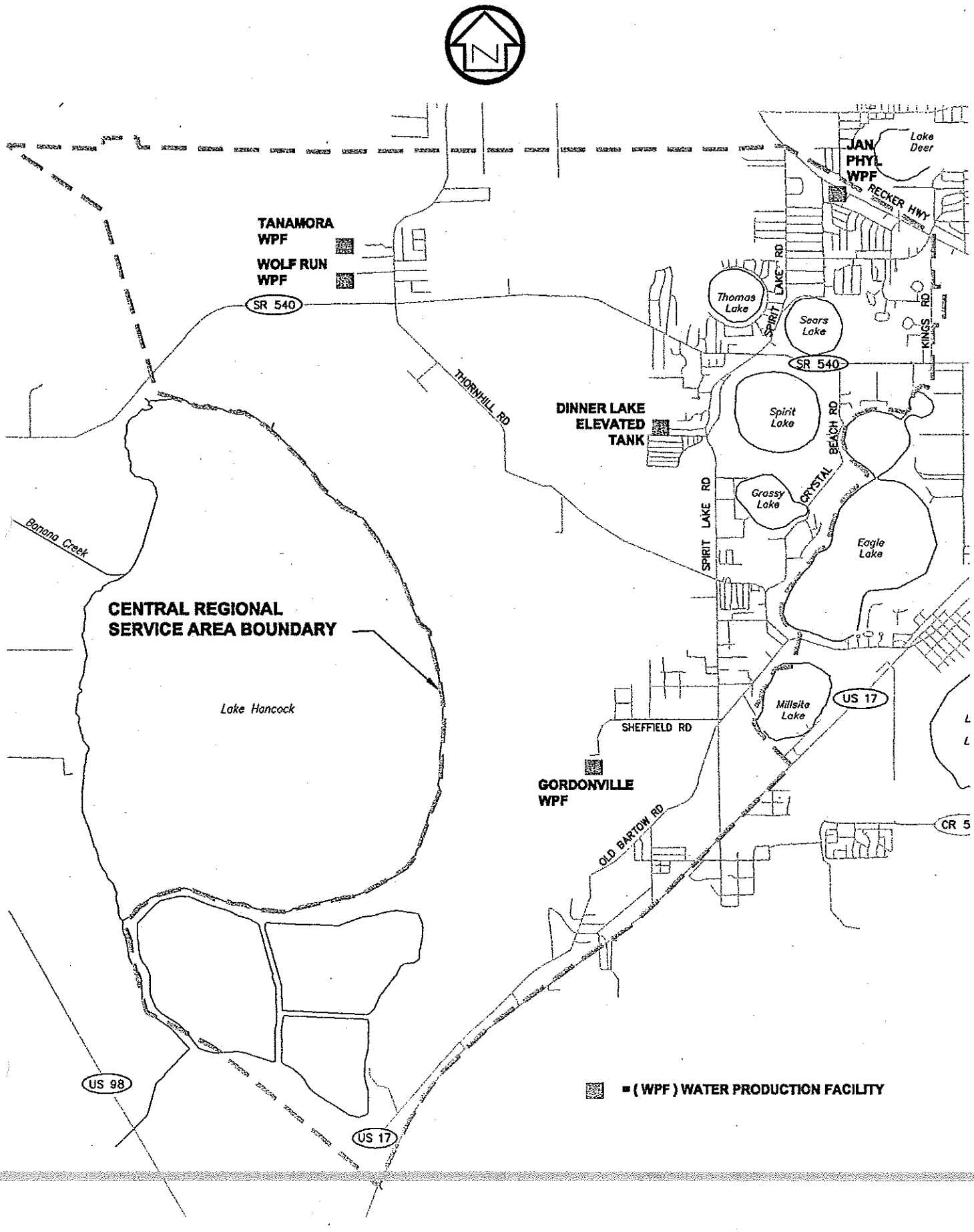

POLK COUNTY UTILITIES DIVISION
EAST REGIONAL SERVICE AREA

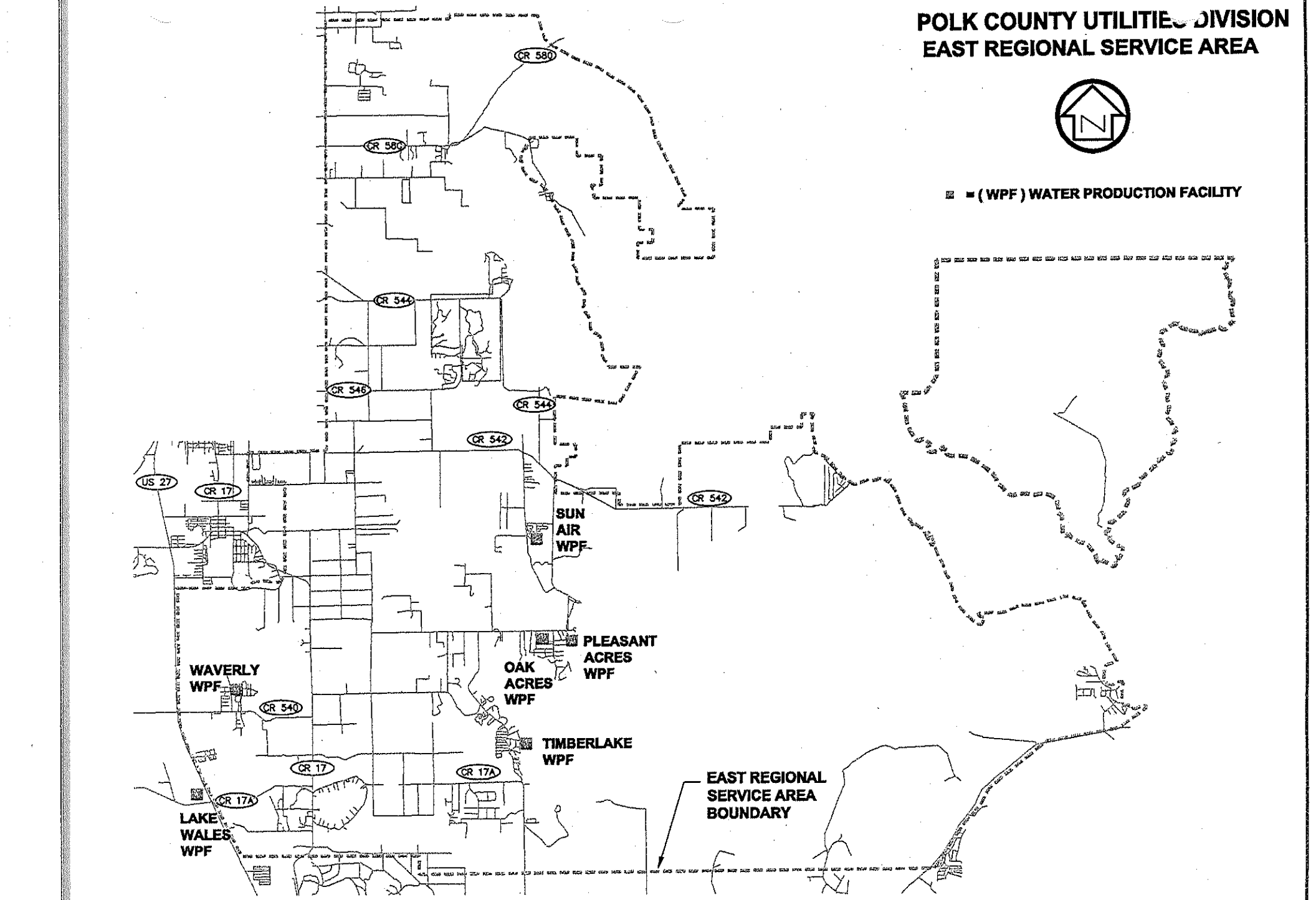

POLK COUNTY UTILITIES DIVISION
NORTHEAST REGIONAL SERVICE AREA

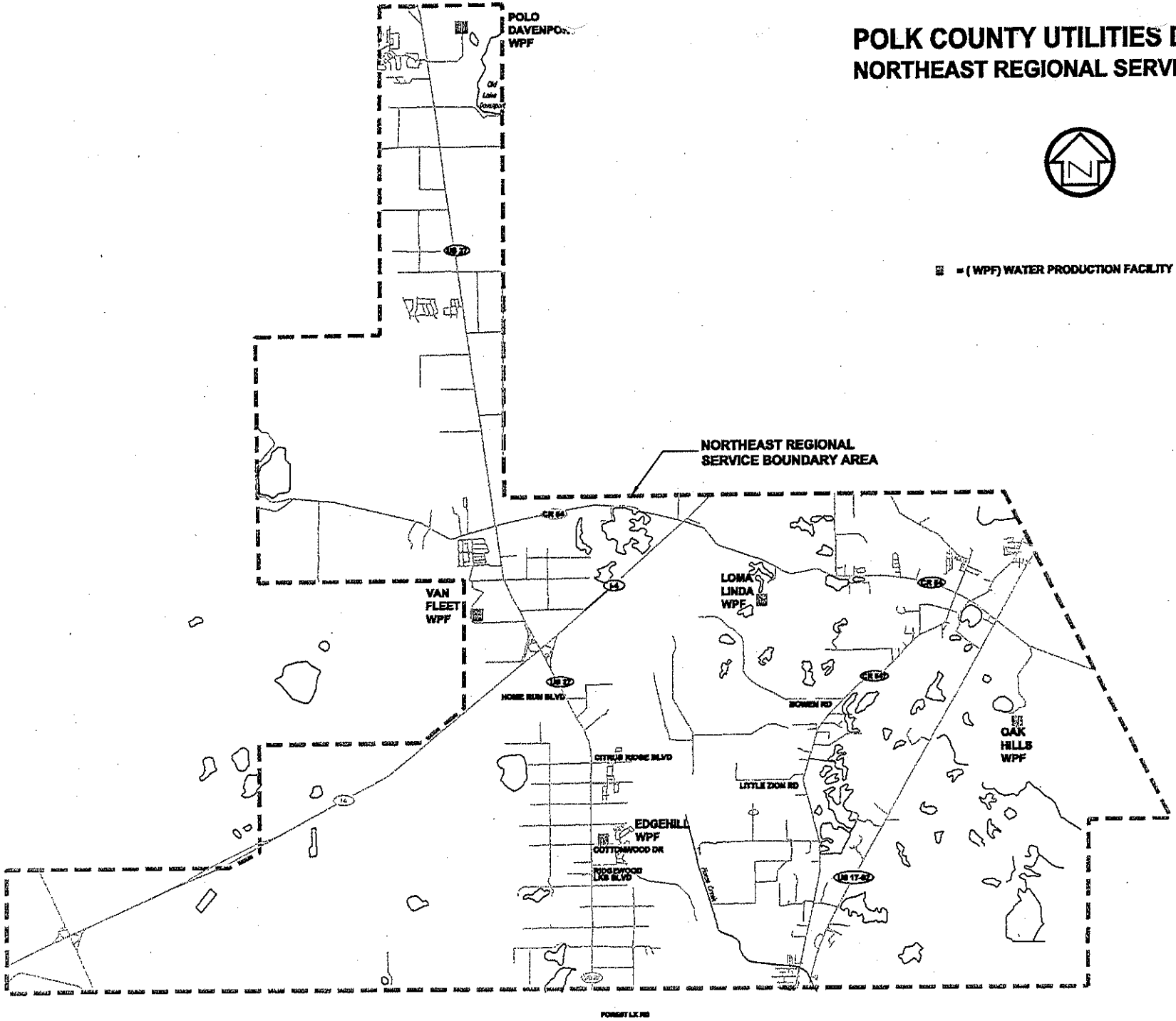

POLK COUNTY UTILITIES DIVISION
NORTHWEST REGIONAL UTILITY SERVICE AREA

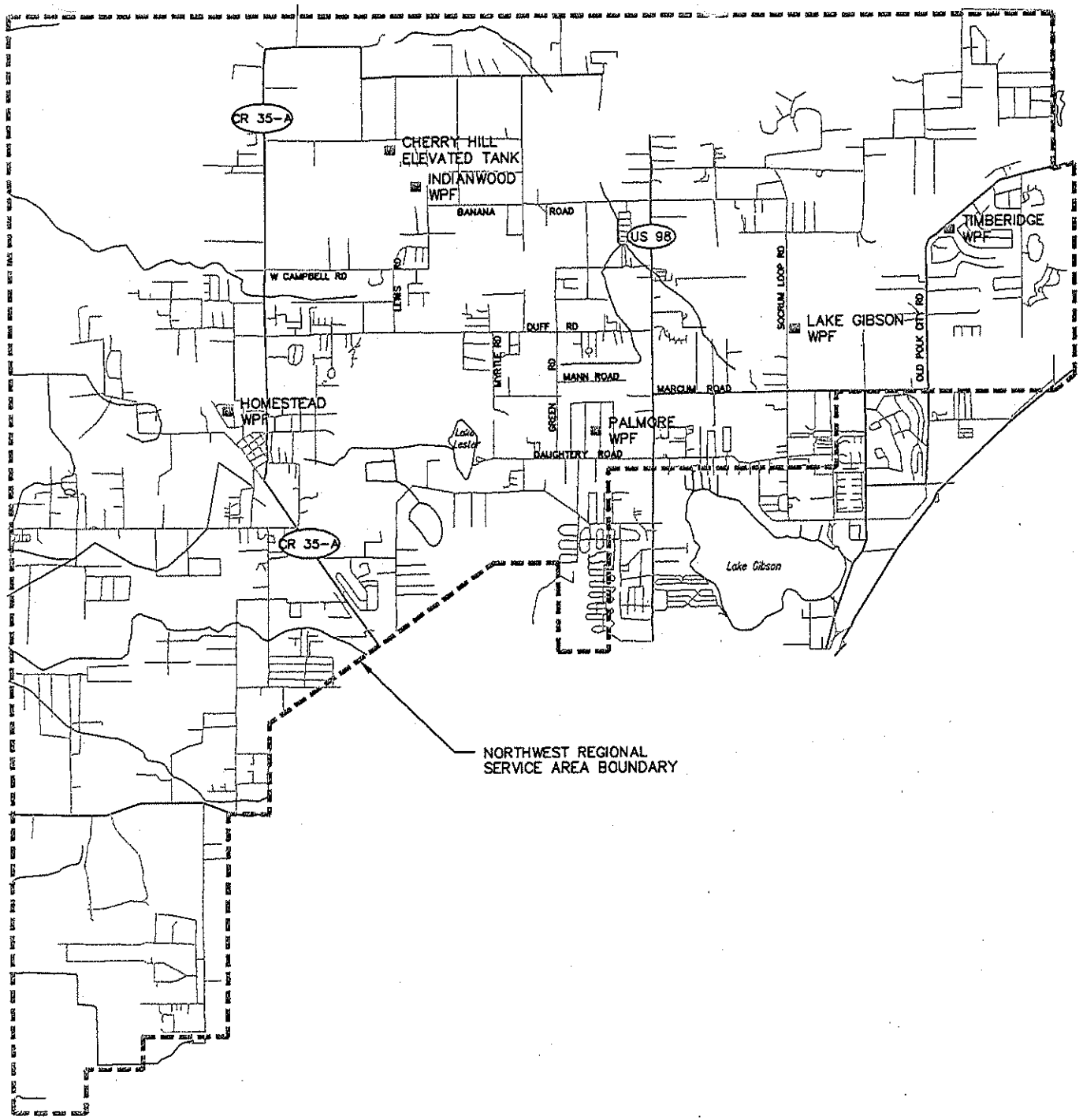

N

WPF = (WPF) WATER PRODUCTION FACILITY

POLK COUNTY UTILITIES DIVISION
SOUTHEAST REGIONAL SERVICE AREA

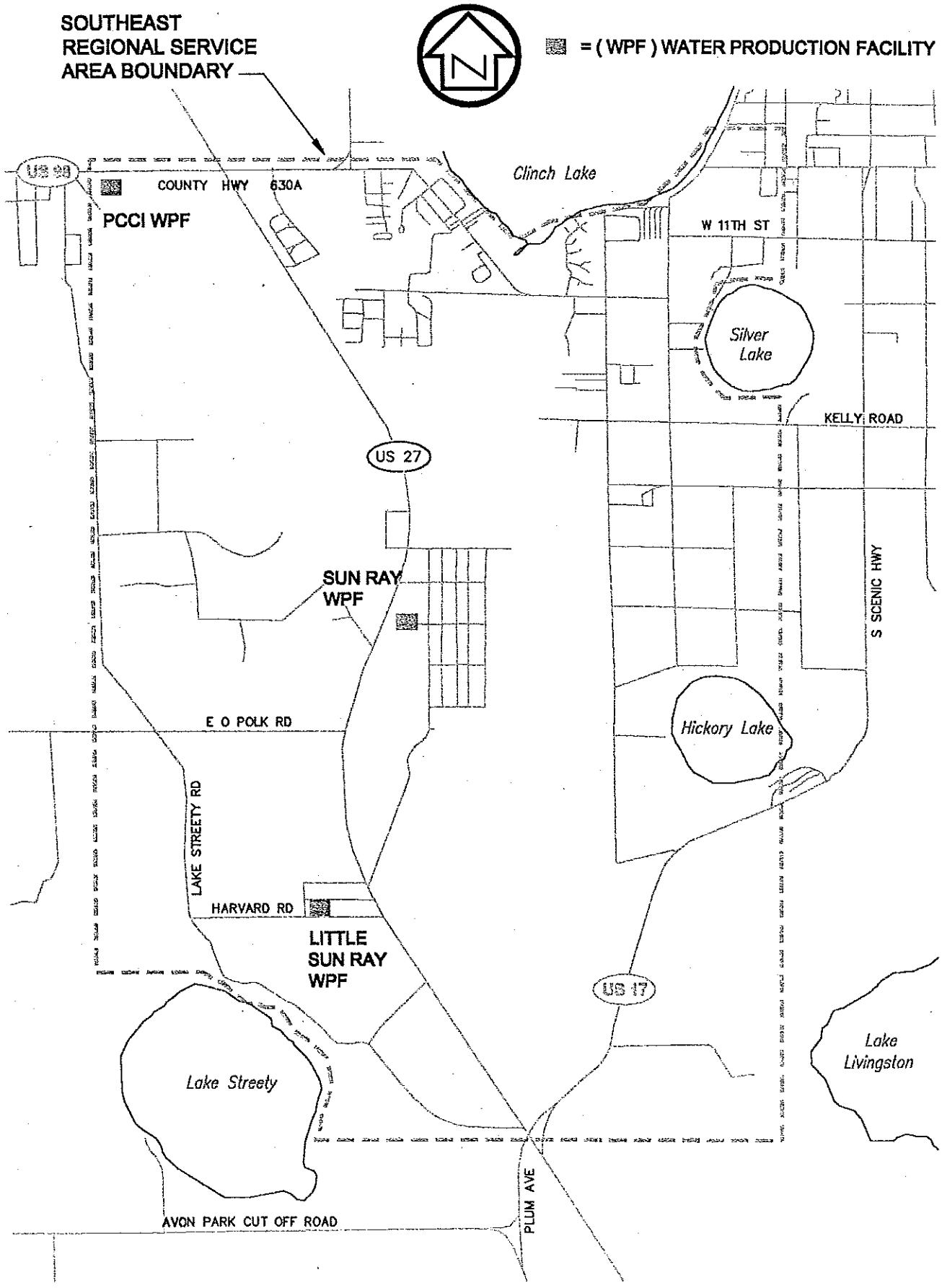

POLK COUNTY UTIL S DIVISION
SOUTHWEST REGIONAL UTILITY SERVICE AREA

= (WPF) WATER PRODUCTION FACILITY

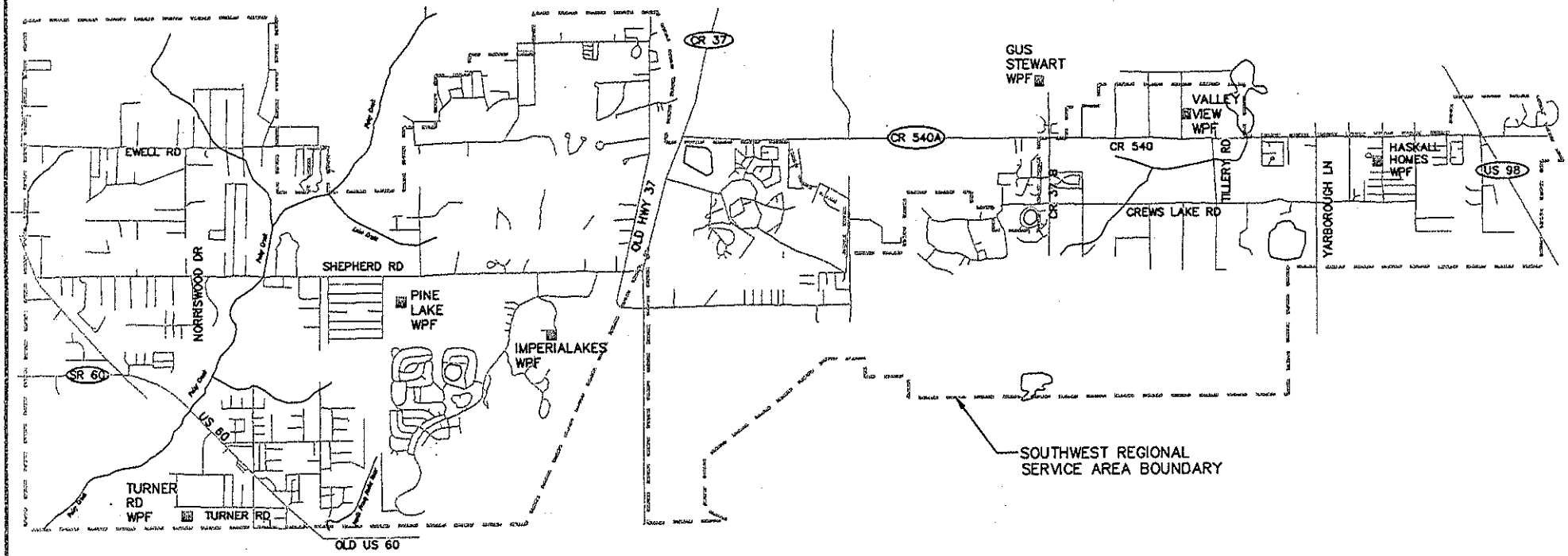

Polk County Utilities, Florida

UTILITIES STANDARDS AND SPECIFICATIONS MANUAL

Utilities Code Reference Document 6(B)

Polk County Board of County Commissioners

Bob English	Melony Bell	Ed Smith	Todd Dantzler	Sam Johnson
District 1	District 2	District 3	District 4	District 5

Jim Freeman	Bill Beasley, PE	Gary Fries, PE
County Manager	Deputy County Manager	Utilities Director

December 2010

(Reference Manual Updates: March 2012, December 2012, May 2013, November 2013, September 2014)

TABLE OF CONTENTS

TABLE OF CONTENTS

TABLE OF CONTENTS

TABLE OF CONTENTS

Rev September 2014

STANDARD DRAWINGS

December 2010

TABLE OF CONTENTS
STANDARD DRAWINGS

December 2010

TABLE OF CONTENTS

STANDARD DRAWINGS

December 2010

CHAPTER 1 GENERAL INFORMATION

Section 110 Introduction

December 2010

PART 1 – AUTHORITY

This MANUAL has been approved by the COUNTY and accepted as an official document of the COUNTY. The MANUAL shall be enforced and no part thereof shall be altered without following the procedure contained with in the Section entitled "Reference Manual Revision Procedure" as established within the Polk County Utilities Code.

PART 2 – JURISDICTION

This MANUAL shall apply to:

A. All privately constructed development projects containing water, wastewater, and reclaimed water utility systems that will be dedicated to the COUNTY for ownership, operation, and maintenance;

B. All privately constructed development projects subject to the jurisdiction of the LAND DEVELOPMENT CODE that are proposed to contain water, wastewater, and/or reclaimed water utility systems which are not proposed to be part of a municipality's water and wastewater utility system; and

C. All Polk County Utilities (PCU) Community Investment Program projects, including rehabilitation and replacement projects.

PART 3 – PURPOSE

This Utilities Standards and Specifications Manual (MANUAL) establishes minimum design standards, construction specifications, submittal requirements, and approval or acceptance procedures for potable water, wastewater, and reclaimed water systems.

It is not intended that this MANUAL address every situation that may arise. The application of engineering/surveying principles, construction techniques, and judgment, combined with information contained in this MANUAL are necessary to complete PCU projects and protect the safety, health, and welfare of the public. The approval of plans by PCU shall not relieve the ENGINEER or DEVELOPER from required compliance with the provisions of this MANUAL, unless a specific written approval is received from PCU. All appeals shall be processed in accordance with the Section entitled "Appeal Process" as specified in the Polk County Utilities Code.

This MANUAL shall be updated as required in accordance with the Section entitled "Reference Manual Revision Procedure" as established within the Polk County Utilities Code to address revisions and improvements, such as design criteria, construction techniques, materials, standard drawings, and updated procedures for submittals. PCU shall utilize a web page, accessed through the PCU website, for posting the latest MANUAL revisions.

PART 4 – ORGANIZATION

This MANUAL is presented in six chapters. A summary of the chapters is provided below to facilitate the use of this MANUAL.

A. Chapter 1 – General Information
B. Chapter 2 – Development Coordination
C. Chapter 3 – General Requirements
D. Chapter 4 – Water
E. Chapter 5 – Wastewater
F. Chapter 6 – Reclaimed Water

PART 5 – CLARIFICATION IN THE USE OF CHAPTERS 2, 3, 4, 5, AND 6

A. Chapter 2 "Development Coordination", Chapter 3 "General Requirements", Chapter 4 "Water", Chapter 5 "Wastewater", and Chapter 6 "Reclaimed Water" are provided as minimum criteria to assist a consulting ENGINEER in the development of the design documents. This MANUAL shall not be used as a substitute for actual design.

B. The applicable STANDARD DRAWINGS shall be used as presented. PCU may accept modifications on a limited case-by-case basis only if a modification is deemed by PCU to be of a benefit to PCU.

PART 6 – INFORMATION PROVIDED BY PCU

All information provided by PCU, at any time, shall not be used for the design or construction of any building, development, or other improvements without field verification, including the use of ground penetrating radar and/or soft dig verification methods, by the DEVELOPER, the ENGINEER, or the CONTRACTOR. The recipient's reliance, at any time, upon maps, data, or other record information provided by PCU shall be solely at his or her risk. PCU shall have no actual or implied liability for incorrect drawings, record drawings, or other materials that the recipient reviews and/or utilizes in preparation of making business or personal decisions.

PART 7 – INTERPRETATION OF THE MANUAL

The PCU interpretation of the MANUAL shall be binding and controlling for any portion of the MANUAL, differences between Sections, or a controlling supplemental specification such as federal, state, or COUNTY regulations.

PART 8 – POLK COUNTY UTILITIES WEB ACCESS

The PCU web page will be accessed through the County's web site at:

http://www.polk-county.net/utilities.aspx.

PCU will make this MANUAL available for download from the web page and will provide copies of this MANUAL in digital form upon request. Questions regarding this MANUAL should be emailed to the Utilities Code Committee at utilitiescodecommittee@polk-county.net.

CHAPTER 1 GENERAL INFORMATION

Section 111 Abbreviations December 2010

The following is a listing of primary abbreviations used in this MANUAL.

A

AASHTO	American Association of State Highway and Transportation Officials
AC	asbestos cement pipe
AC	alternating current
ACI	American Concrete Institute
ACPA	American Concrete Pipe Association
AMCA	Air Conditioning and Mechanical Contractors Association
amp	ampere
ANSI	American National Standards Institute Inc
APWA	American Public Works Association
ARV	air release valve
ASME	American Society of Mechanical Engineers
ASTM	American Society of Testing and Materials
AWS	American Welding Society
AWWA	American Water Works Association

B

BLDG	building
BM	benchmark
BT	buried telephone cable

C

CCTV	closed circuit television
CD-R	compact disc-read only
cfm	cubic feet per minute
CGB	circuit group blocking message
CIP	cast iron pipe or Community Investment Program
CIPP	cured in place pipe
CLF	chain link fence
CMP	corrugated metal pipe
CMU	concrete masonry unit
CO	clean out
CONC	concrete
CPU	central processing unit
CSA	Canada Standards Association
CTU	central telemetry unit

D

dbs	decibels
DC	direct current
DCCA	Directional Crossing Contractors Association
deg	degree
dia	diameter

DIP	ductile iron pipe
DIPRA	Ductile Iron Pipe Research Association
dpi	dots per inch
DR	Dimension Ratio
DRI	Development of Regional Impact
DVD	digital video disc/digital versatile disc
DW	driveway
dwg	AutoCAD file format
dxf	data exchange file

E

EOP	edge of pavement
EPA	United States Environmental Protection Agency
EPROM	erasable programmable read-only memory
ERC	Equivalent Residential Connection
ERU	Equivalent Residential Unit

F

FAC	Florida Administrative Code
FCC	Federal Communications Commission
FCCCHR	Foundation for Cross Connection Control and Hydraulic Research of the University of Southern California
FDEP	Florida Department of Environmental Protection
FDOH	Florida Department of Health / Polk County Health Department
FDOT	Florida Department of Transportation
FH	fire hydrant
FIFO	“first-in”, “first-out” memory or field inspection field office
FIG	figure
FIP	female iron pipe
FLG	flange
FM	forcemain
FOC	fiber optic cable
fps	feet per second
FS	Florida Statute
ft	foot
ft-lb	foot-pound

G

GIS	Geographic Information System
gpd	gallons per day
gpm	gallons per minute
GPS	Global Positioning System
GSP	galvanized steel pipe

H

HARN	Horizontal Accuracy Reference Network
HDD	horizontal directional drilling
HDPE	high-density polyethylene
HMI	human machine interface
HORIZ	horizontal

K

Kv	kilovolt
KVA	kilovolt-ampere
Kw	kilowatts

I

ID	identification number
ID	inside diameter
IEEE	Institute of Electrical and Electronics Engineers
I/O	input/output
IPS	iron pipe size
ISA	Instrument Society of America
ISO	International Standards Organization

L

LCD	liquid crystal display
LF	linear feet
LPA	Planning Commission (Local Planning Agency)

M

ma	milliamps
MAX	maximum
MGD	millions gallons per day
MH	manhole
MHF&C	manhole frame and cover
MHz	megahertz
mil	millionths
MJ	mechanical joint
mpd	minutes per day
MPEG	digital video file format
ms	millisecond
MSDS	Material Safety Data Sheets

N

NACE	National Association of Corrosion Engineers
NASSCO	National Association of Sewer Service Companies
NCPI	National Clay Pipe Institute
NEC	National Electrical Code
NUCA	National Underground Contractors Association

NEMA	National Electrical Manufacturers Association
NETA	International Electrical Testing Association
NFPA	National Fire Protection Association
NPT	National Pipe Thread
NSF	National Sanitation Test Laboratory Association

O

OC	on center
OD	outside diameter
ODBC	open database connectivity
OS&Y	outside screw and yoke
OSHA	Federal Occupational Safety and Health Administration

P

PACP	Pipeline Assessment Certification Program
PCCP	pre-stressed concrete cylinder pipe
PD	Planned Development
PDF	Adobe Acrobat file format
PL	property line
PLC	programmable logical controller
ppb	parts per billion
ppm	parts per million
PRV	pressure regulating or reducing valve
psf	pounds per square foot
psi	pounds per square inch
PSP	Preliminary Subdivision Plan
PVC	polyvinylchoride pipe

R

RAM	random access memory
REQ'D	required
RJ	restrained joint
ROW	right-of-way
RTK	real-time kinematic
RTD	real-time differential
RTU	radio telemetry unit

S

SCADA	Supervisory Control and Data Aquisition
SSO	sanitary sewer overflow
SQ	square
SS	stainless steel

T

TBM	temporary benchmark

TCP/IP	transmission control protocol/internet protocol
THW	thermoplastic heat and water-resistant insulated wire (UL)
THWN	thermoplastic heat and water-resistant nylon coated wire (UL)
tif	tagged image file format
TVSS	transient voltage surge suppressor
TYP	typical

U

UL	Underwriters Laboratories Inc
USGS	United States Geological Survey
UV	ultraviolet light

V

VAC	volt-alternating current
VCP	vitrified clay pipe
VDC	volt-direct current
VFD	variable frequency drive

W

WM	water main
WSF	wood stockade fence
WWF	welded wire fabric

Y

yd	yard

CHAPTER 1 GENERAL INFORMATION

Section 112 Definitions

December 2010

Except where specific definitions are used within a specific MANUAL section, the following terms, phrases, words and their derivation shall have the meaning given herein when consistent with the context in which they are used. Words used in the present tense include the future tense, words in the plural number include the singular number and words in the singular number include the plural number. **The word "shall" is mandatory, and the word "may" is permissive.**

AASHTO: American Association of State Highway and Transportation Officials. Any reference to AASHTO standards shall mean latest edition.

ANSI: American National Standards Institute. Any reference to ANSI standards shall mean latest edition.

ARCHITECT: Architect registered with the State of Florida Department of Business and Professional Regulation to provide professional architectural services.

ASTM: American Society for Testing Materials. Any reference to ASTM standards shall mean latest edition.

AS-BUILT SURVEY: Field measurements of vertical and horizontal dimensions of constructed improvements certified by a SURVEYOR so that the constructed facilities can be delineated in such a way that the location of the construction may be compared with the construction PLANS.

AWWA: American Water Works Association. Any reference to AWWA Standards shall mean latest edition.

BOUNDARY AND TOPOGRAPHICAL SURVEY: Boundary and topographical survey, map and report certified by a SURVEYOR that meets the requirements of Chapter 61G17-6 'Minimum Technical Standards', FAC.

CIP: PCU Community Investment Program projects.

COUNTY: Polk County Board of County Commissioners, Polk County, Florida.

COUNTY SURVEYOR: The County staff member, licensed by the State of Florida as a professional surveyor and mapper pursuant to Chapter 472, F.S., who is responsible for reviewing surveys within the County.

CONTRACTOR: Person, firm, or corporation with whom the contract for work has been made for the OWNER, the DEVELOPER or PCU.

CROSS CONNECTION CONTROL ASSEMBLY: An assembly that has been manufactured in full conformance with AWWA Standards and meets the laboratory and field performance specifications of the FCCCHR. Cross Connection Control Assemblies shall also comply with the

requirements of Rule 62-555 F.A.C.

COMMUNITY INVESTMENT PLAN (CIP): County documents that identify improvements to the PCU Water Systems, Wastewater Systems, and Reclaimed Water Systems that will be funded and constructed as identified within the current 5 year Master Plan for each PCU Regional Utility Service Area's water, wastewater, and reclaimed water system.

DEVELOPER: Person, firm, or corporation engaged in developing or improving real estate for use or occupancy.

DEVELOPMENT: Any improvement of real estate for use or occupancy**.**

DIGITAL UTILITY PLAN: For approvable construction projects, a digital utility plan of the affected construction area shall be submitted in encompassing digital file(s) for importing into PCU's GIS. The digital file includes existing, new or altered structures in the work area, geodetic control and survey data.

DIRECTOR: The person who is responsible for the day to day administration and management of Polk County Utilities.

ELEVATIONS: Vertical elevations based on the North American Vertical Datum 1988 (NAVD 88).

ENGINEER: An individual currently licensed to practice engineering in the State of Florida.

EQUIVALENT RESIDENTIAL CONNECTION (ERC): The water demand and sewage generation value (gpd) for a standard detached single family dwelling.

FAC: Florida Administrative Code.

FDEP: Florida Department of Environmental Protection.

FDOT: Florida Department of Transportation.

FIRE DEPARTMENT: The Polk County Public Safety Department.

FIRE FLOW: The amount of water measured in gallons per minute at a minimum residual pressure of 20 p.s.i that is required to provide adequate fire suppression in accordance with standards established by the FIRE DEPARTMENT.

FS: The Statutes of the State of Florida.

INSPECTOR: A County employee or consultant that is qualified and authorized to perform

inspections on behalf of PCU.

LAND DEVELOPMENT CODE: The Polk County Land Development Code.

MANUAL: The Polk County Utilities Standards and Specifications Manual.

MASTER METER ASSEMBLY: An above ground installation containing a dual body meter assembly, a certified cross connection control assembly, concrete pad, SCADA, piping, valves, and related components.

MASTER PLAN: For projects to be constructed in multiple phases, a master plan for water, wastewater and/or reclaimed water is required. The master plan consists of a utility system layout superimposed on a topographic map, calculations for potable water demand, reclaimed water demand and wastewater flow, as well as a pipe network analysis for flow and pressure distribution.

NEMA: National Electrical Manufacturers Association. Any reference to NEMA Standards shall be the latest edition.

NORMAL WORKING DAY: Monday through Friday, excluding COUNTY holidays.

NORMAL WORKING HOURS: Hours are between the hours of 7:30 a.m. to 6:30 p.m. of a NORMAL WORKING DAY.

NSF: National Sanitation Test Laboratory Foundation. Any reference to NSF Standards shall be the latest edition.

OWNER: Person, firm, corporation, or governmental unit holding right of possession of the real estate upon which construction is to take place.

POLK COUNTY UTILITIES (PCU): The Polk County entity which has the responsibility of administering, operating, and maintaining the PCU Utility Systems.

PLANS: Drawings prepared by an ENGINEER or ARCHITECT to show the proposed and, when the County approved review process is completed, the PCU approved improvements that are to be constructed.

PRIVATE SYSTEMS: Utility systems that are not to be owned, operated, or maintained by PCU.

PUBLIC WORKS: Infrastructure Management Department of the Polk County Board of County Commissioners, Polk County, Florida.

RECLAIMED WATER REGULATIONS: In accordance with the Reference Manual 6(D), Reclaimed Water Policy Manual", Polk County Utilities Code.

CHAPTER 1 GENERAL INFORMATION

Section 112 Definitions December 2010

RECLAIMED WATER SYSTEM: Reclaimed water transmission and distribution piping, pump stations, augmentation wells, fittings, valves, services, meters and miscellaneous related appurtenances.

RECORD DRAWINGS: Plans certificated by the ENGINEER that accurately depict the horizontal and vertical locations of all installed utility system components involved in the completed WORK.

REFERENCE MANUAL 6(A): The Polk County Utilities Administration Manual, adopted by reference herein.

REFERENCE MANUAL 6(B): This Manual, the Polk County Utilities Standards and Specifications Manual, adopted by reference herein.

REFERENCE MANUAL 6(C): The Polk County Utilities Cross-Connection Control Policy Manual, adopted by reference herein.

REFERENCE MANUAL 6(D): The Polk County Utilities Reclaimed Water Policy Manual, adopted by reference herein.

REFERENCE MANUAL 6(E): The Polk County Industrial Wastewater Pre-Treatment Policy Manual, adopted by reference herein.

REFERENCE MANUAL 6(F): The Polk County Utilities Water Conservation Policy Manual, adopted by reference herein.

REFERENCE MANUAL 6(G): The Polk County Utilities Fats, Oils, and Grease Policy Manual, adopted by reference herein.

REGIONAL UTILITY SERVICE AREA (RUSA): An established area for the purpose of planning and the provision of utility service to existing and future PCU customers.

REGISTERED HOLDERS: Users of the MANUAL that have provided current email information to the STANDARDS COMMITTEE so they may be notified of pending revisions to the MANUAL.

UTILITY PERMIT: Regulations, as established by the Polk County Board of County Commissioners, for the governance of the County's public rights-of-way and easements.

SAMPLES: Physical examples of materials, equipment, or workmanship that are representative of some portion of the WORK and which establish the standards by which such portion of the WORK will be judged.

CHAPTER 1 GENERAL INFORMATION

Section 112 Definitions December 2010

SHOP DRAWINGS: All drawings, diagrams, illustrations, schedules, and other data or information, which are specifically prepared or assembled by or for CONTRACTOR and submitted by CONTRACTOR to illustrate some portion of the WORK.

SPECIFIC PURPOSE SURVEY: Survey, map, and report certified by a SURVEYOR of an easement with water, wastewater, and/or reclaimed water pipes maintained by PCU and meets the requirements of Chapter 61G17-6 'Minimum Technical Standards', FAC. The report shall describe the locations where the pipe centerline was not constructed within two feet of the centerline of the easement.

STANDARD DRAWINGS: Detailed drawings contained in this MANUAL related to water, wastewater and reclaimed water system materials and installation.

STANDARD FDOT SPECIFICATIONS: State of Florida Department of Transportation, Standard Specification for Road and Bridge Construction.

SUBCONTRACTOR: An individual or entity having a direct contract with CONTRACTOR or with any other subcontractor for the performance of a part of the WORK.

SURVEYOR: An individual currently licensed to practice surveying and mapping in the State of Florida.

TRAFFIC CONTROL AND SAFE PRACTICES MANUAL: Florida Department of Transportation Manual on Traffic Control and Safe Practices for Street and Highway Construction, Maintenance and Utility Operation and the Manual of Uniform Traffic Control Devices (MUTCD).

UTILITIES CODE COMMITTEE: Comprised of the Utilities Capital Projects Manager, Utilities Customer Services Manager, Utilities Operations and Maintenance Manager, and one representative each from the County Engineer and County Purchasing Sections. The Utilities Director shall not serve on the Utilities Code Committee.

UTILITY ACCOMMODATION GUIDE: State of Florida Department of Transportation Utility Accommodation Guide, latest edition.

UTILITY ASSET: Any component of a potable water, reclaimed water, or wastewater system, including, but not limited to, permits, easements, and fee simple properties.

WASTEWATER SYSTEM: Wastewater transmission pipes including gravity sewers and force mains, wastewater pump stations, fittings, valves, service laterals and miscellaneous related appurtenances.

WATER SYSTEM: Water transmission and distribution pipes, water pump stations, fittings, valves, hydrants, services, meters and miscellaneous related appurtenances.

CHAPTER 1 GENERAL INFORMATION

Section 112 Definitions December 2010

WORK: Labor, materials, equipment, supplies, services and other items necessary for the execution, completion and fulfillment of the approved PLANS.

CHAPTER 1 GENERAL INFORMATION

Section 113 Approval Process for New Products December 2010

PART 1 - GENERAL

A. The UTILITIES CODE COMMITTEE shall evaluate new and existing products and materials for efficient and economical utilization. The UTILITIES CODE COMMITTEE is charged with the development of a fair and reasonable methodology to systematically evaluate utility products for use through research and/or field evaluation.

B. It is the intent of PCU to review and update each "Approved Materials Checklist" as appropriate to ensure efficient operation of the services and facilities under the jurisdiction of the MANUAL. Products in use are subject to ongoing consideration and evaluation by the UTILITIES CODE COMMITTEE. When changes, deletions, or additions become necessary and are approved, each "Approved Materials Checklist" will be revised. Questions concerning each "Approved Materials Checklist" may be addressed to the UTILITIES CODE COMMITTEE web site.

C. The approval process for adding materials to each "Approved Materials Checklist" requires the product and equipment manufacturers to submit a written request to be considered on the list. The UTILITIES CODE COMMITTEE shall evaluate new and existing products for efficient and economical utilization within the PCU system. PCU may approve a demonstration project with specific conditions and timelines and may request the supplier provide the product at no charge to PCU for testing.

D. Issues regarding accepted products shall be submitted to the UTILITIES CODE COMMITTEE for review. Such review may lead to a recommendation to rescind approval. The UTILITIES CODE COMMITTEE shall inform the supplier/manufacturer of the reasons for removal from each "Approved Materials Checklist".

PART 2 SUBMITTALS

A. General:

Product and equipment manufacturers shall submit a request for consideration to the MANUAL web site. If the submittal is acceptable, the UTILITIES CODE COMMITTEE will evaluate the product. Products may be requested for testing or field evaluation. Following review of the submittal, the UTILITIES CODE COMMITTEE may request a presentation by the manufacturer at a regularly scheduled committee meeting to demonstrate the product or provide additional information. Procedures for testing or evaluation shall be as agreed upon between the supplier and the UTILITIES CODE COMMITTEE. Results will become a part of the product file and will be made available to the supplier upon request. PCU will periodically update a database of all testing locations, time of test, and results. From this information, the UTILITIES CODE COMMITTEE will recommend approval or denial of the product(s). A majority vote by the UTILITIES CODE COMMITTEE is required to accept any new product. The UTILITIES CODE COMMITTEE will advise the supplier of the decision regarding the product. The newly accepted product will be added to the applicable "Approved Materials Checklist". As the

"Approved Materials Checklists" are part of the Utilities Standards and Specifications Manual, this Manual shall be revised in accordance with the Reference Manual Revision Procedure as specified in the Enacting Ordinance.

B. Submittal Requirements:

1. Provide a product description, the technical specifications and catalog information including applicable part number or series number that approval is requested on.
2. List all applicable product standards (AWWA, ASTM, ANSI, NFPA and others) and related manufacturer's certifications.
3. Test results showing compliance with applicable standards, including independent laboratory test results, if necessary.
4. Provide the manufacturer's installation procedures for the particular product.
5. Provide the product availability, delivery time and manufacturer's location and local representative availability.
6. Maintenance requirements, special equipment and procedures and recommended maintenance schedules.
7. Product references (municipal or public users) shall include users name, address and telephone number, product application and number of years in use, and name and telephone number of a contact person having knowledge of the particular usage.
8. Provide the material safety data sheet (MSDS), if applicable.
9. Provide recent product revisions or improvements.
10. Explanation of how the product benefits PCU in terms of prolonged service life, reduced maintenance, reduced life-cycle cost and other relevant aspects.

CHAPTER 2 DEVELOPMENT COORDINATION

Section 210 Development Coordination December 2010

PART 1 INTRODUCTION

1.01 PURPOSE

A. This Section delineates the processes for submittals, reviews, approvals, and acceptance of potable water, reclaimed water, and wastewater systems and facilities to be served by or owned, operated, and maintained by PCU.

1.02 GENERAL

A. Prior to the construction of any utility systems that are intended to become a part of or be served by a PCU owned or operated utility system, construction plans, specifications, engineering and hydraulic analyses, and completed regulatory agency permit applications for such systems must be: (1) Prepared by an ENGINEER in accordance with design criteria and (2) Submitted for review and approved by PCU.

B. Approval of construction drawings by PCU shall not imply or guarantee that potable water, wastewater, or reclaimed water capacity is or will be available when needed by the DEVELOPER unless a Letter of Concurrency is issued by the Growth Management Department. Approval of plans by PCU shall not be construed in any way to relieve the ENGINEER of his responsibility to provide calculations, designs, and prepare construction plans and specifications that meet all applicable engineering standards and regulatory requirements.

C. All potable water, wastewater, and reclaimed water related construction activities shall be subject to periodic inspection by the DEVELOPER's ENGINEER and the COUNTY. Inspection by the COUNTY shall not constitute COUNTY approval of any construction or acquiescence in or a waiver of claims for defects in materials or workmanship.

D. Nothing contained herein shall be construed as restricting or preventing PCU's ability to enter into a special arrangement with a user as determined by PCU to be in its best interest, whereby the specific terms of obtaining service are set forth in a Developer/Utilities Agreement.

PART 2 SUBMITTAL PROCESS

2.01 GENERAL

A. This Section presents the process for submitting utility system plans, permit applications, and supporting information for a typical development project to PCU for review, approval, and, ultimately, acceptance of a utility system for ownership, operation and maintenance responsibility, so that utility service may be provided to the public.

Depending on the individual project, at least two (2) submittals may be required to complete the review, approval, and acceptance process. As applicable, these submittals shall be segregated into "packages" and submitted in the following chronological order:

1) Pre-Application Conference (recommended for all proposed projects and corresponds to Growth Management Department Level 1 Review.)

2) Pre-Design Conference (highly recommended for all proposed projects)

3) Technical Review Package (required for all proposed projects; corresponds to Growth Management Department Level 2 Review.)

4) Potable Water System Certification Package

5) Wastewater System Certification Package

6) Utilities Bond Request Package

7) Board Acceptance Request Package

Only those items of each package that pertain to the particular project are required, e.g., a plat is not required for a development that will not be platted. Each package must be submitted complete with all applicable information required. All review responses shall be in accordance with established LAND DEVELOPMENT CODE response times.

PCU Community Investment Program projects that only involve potable water, wastewater, and reclaimed water main extensions within rights-of-way or easements may be exempted by the Polk County Growth Management Department from submitting PLANS for the LAND DEVELOPMENT CODE review and approval process.

2.02 PRE-APPLICATION CONFERENCE

A. Applicability

The DEVELOPER/ENGINEER shall comply with the requirements set forth in the LAND DEVELOPMENT CODE for a Level 1 Review.

2.03 PRE-DESIGN CONFERENCE

A. Applicability

This Conference is recommended for all projects requesting utility service from PCU.

B. Recommended Documents for Discussion

In the event that the ENGINEER requests a Pre-Design Conference with PCU, the following documents are recommended:

1) One complete set of conceptual design plans of the project indicating proposed utility systems dated by the ENGINEER. Information contained within the plan set should be in compliance with the Section entitled "Project Design Documents and Submittals".

2) For phased projects, a conceptual master utility plan of the entire project is to be included that shows proposed phase lines, utility main sizes, pump stations, manholes, roadways, utility easements (onsite and offsite), right-of-ways, and lot lines.

C. Submittal

No formal submission of plans and calculations shall be required as part of the Pre-Design Conference.

D. PCU Response

PCU shall provide the ENGINEER with follow-up correspondence that memorializes PCU's understanding of the items discussed during the conference. Said correspondence shall be forwarded to the ENGINEER within one (1) calendar week.

For non-residential projects, PCU shall provide estimated connection fees and other related charges as part of the follow-up correspondence.

2.04 TECHNICAL REVIEW PACKAGE

A. Applicability

This Package is required for all projects requesting utility service from PCU.

B. Contents

The Technical Review Package shall contain the following items:

1) One complete design plan set, including the cover sheet and all applicable detail sheets of the project and utility systems, signed, sealed, and dated by the

ENGINEER. Information contained within each plan set shall comply with the Section entitled "Project Design Documents and Submittals".

2) If applicable, one 24" x 36" copy of the Draft Final Plat showing the appropriate utility easements, street names, lot numbers, etc.

3) Drafts of completed Polk County Utilities Easement documents providing easements over properties that are not proposed to be platted and shall contain existing and proposed portions of the PCU utility system(s). Submission of fully executed documents shall be delayed until PCU notifies the ENGINEER that the design plan set has been found approvable by PCU.

4) Florida Department of Environmental Protection Wastewater System Construction Permit Applications. Submission shall be delayed until PCU notifies the ENGINEER that the design plan set has been found approvable by PCU.

5) Florida Department of Environmental Protection Public Water System Construction Permit Applications (for approvable by the Polk County Health Department). Submission shall be delayed until PCU notifies the ENGINEER that the design plan set has been found approvable by PCU.

6) Florida Department of Transportation Utility Permit Applications. Submission shall be delayed until PCU notifies the ENGINEER that the design plan set has been found approvable by PCU.

7) Polk County Utility Permit Applications. Submission shall be delayed until PCU notifies the ENGINEER that the design plan set has been found approvable by PCU.

8) One digital copy each of all models and calculations used to design potable water, wastewater, and reclaimed water utility systems.

C. Submittal

This submittal shall be made to the Growth Management Department for processing and in accordance with the Comprehensive Plan, LAND DEVELOPMENT CODE, Utilities Code, and established Level 2 Review procedures.

D. PCU Response

All plans, calculations, and other supporting documentation shall be submitted to and distributed by the Growth Management Department.

Should the Growth Management Department determine the Package to be incomplete or any of the information to be unsatisfactory, a letter shall be sent to the ENGINEER stating the deficiencies. No further processing of this package shall occur until all unsatisfactory items are satisfactorily addressed by the ENGINEER.

All reviews, comments, and approvals shall be processed in accordance with established procedures contained within the LAND DEVELOPMENT CODE.

When requested by PCU, fully executed FDEP Applications for potable water and/or wastewater facilities construction shall be submitted by the ENGINEER to the Growth Management Department and routed to PCU for capacity review by PCU. If capacity is available, the applications will be forwarded to the Utilities Director for signature. The applications will then be returned to the Growth Management Department and an approval letter will be sent to the ENGINEER with the signed applications.

Should capacity not be available, the unsigned permit applications will be returned to the Growth Management Department and a Letter of Denial shall be sent to the ENGINEER with the un-signed applications stating that capacity is not currently available.

2.05 POTABLE WATER SYSTEM CERTIFICATION PACKAGE

A. Applicability

This Package is required for all projects that will contain a potable water system to be connected to the PCU water system.

B. Contents

The Potable Water System Certification Package shall contain the following items:

1) One complete Draft Record Drawings plan set, including the cover sheet and all applicable detail sheets, of the water system. Information contained within each plan set shall comply with the Section entitled “Project Design Documents and Submittals”. The plan set shall be bound and stamped with the words “Draft” and “Record Drawings” in large (i.e., 1-inch) print and dated by the ENGINEER.

2) Florida Department of Environmental Protection “Certification of Construction Completion and Request for a Letter of Clearance to Place a Public Drinking Water Facility into Service” that is completed and executed by the DEVELOPER and the ENGINEER.

3) Satisfactory potable water system hydrostatic pressure test results.

4) Satisfactory potable water system bacteriological test results.

5) Satisfactory Potable Water System Pigging Report.

C. Submittal

The ENGINEER shall submit this Package to the Growth Management Department.

D. PCU Response

Upon receipt of a complete Potable Water System Certification Package, the Growth Management Department shall review the submitted information, and, assuming it is found to be complete, forward the Package to the Development Review Staff within the Growth Management Department. The Development Review Staff shall review the submitted information, compare the Draft Record Drawings with the approved Construction Plans, Preliminary Plat, if applicable, and Polk County Utilities Easement documents, if applicable. Upon satisfactory review of Draft Record Drawings, PCU shall execute the Florida Department of Environmental Protection "Certificate of Construction Completion and Request for a Letter of Clearance to Place a Public Drinking Water Facility into Service" form and forward it to the appropriate processing entity within the Growth Management Department.

Should the Growth Management Department determine the Package to be incomplete or any of the information to be unsatisfactory, a letter shall be sent to the ENGINEER stating the deficiencies. No further processing of the Package shall occur until all unsatisfactory items are satisfactorily addressed by the ENGINEER.

2.06 WASTEWATER SYSTEM CERTIFICATION PACKAGE

A. Applicability

This Package is required for all projects that will contain a wastewater and/or reclaimed water system to be connected to the PCU wastewater system and/or reclaimed water system.

B. Contents

The Wastewater System Certification Package shall contain the following items:

1) One complete Draft Record Drawing plan set, including the cover sheet and all applicable detail sheets, of the potable water, wastewater system and reclaimed water system. Information contained within each plan set shall comply with the Section entitled "Project Design Documents and Submittals". The plan set shall

be bound and stamped with the words "Draft" and "Record Drawing" in large (i.e., 1-inch) red print and dated by the ENGINEER.

2) Satisfactory wastewater force main hydrostatic pressure test results.

3) Satisfactory wastewater gravity sewer televising and 5% mandrel test results.

4) Satisfactory Wastewater Force Main Pigging Report.

5) New Lift Station Start-Up Completion Report Form.

6) Satisfactory reclaimed water system hydrostatic pressure test results.

7) Satisfactory Reclaimed Water System Pigging Report.

8) Florida Department of Environmental Protection "Domestic Wastewater Collection/Transmission Systems Certificate of Completion of Construction" form executed by the DEVELOPER and ENGINEER.

9) Two complete ENGINEER approved Operation and Maintenance Manuals, if applicable.

10) For non-residential projects, a check made payable to "Polk County Utilities" in the amount of the connection charges as calculated by Development Review Staff within the Growth Management Department.

C. Submittal

The ENGINEER shall submit this Package to the Growth Management Department.

D. PCU Response

Upon receipt of a complete Wastewater System Certification Package, the Growth Management Department shall review the submitted information, and, assuming it is found to be complete, forward the Package to the Development Review Staff within the Growth Management Department. The Development Review Staff shall review the submitted information, compare the Draft Record Drawings with the approved Construction Plans, Preliminary Plat, if applicable, and Polk County Utilities Easement documents, if applicable. Upon satisfactory review of the Draft Record Drawings, PCU shall execute the Florida Department of Environmental Protection "Certification of Construction Completion and Request for a Letter of Clearance to Place a Public Drinking Water Facility into Service" form and forward it to the appropriate processing entity within the Growth Management Department.

Should the Growth Management Department determine the Package to be incomplete or any of the information to be unsatisfactory, a letter shall be sent to the ENGINEER stating the deficiencies. No further processing of the Package shall occur until all unsatisfactory items are satisfactorily addressed by the ENGINEER.

2.07 PCU BONDING PACKAGE

A. Applicability

This Package is required for all projects that will construct any portion of a utility system to be owned and/or operated by PCU.

B. Contents

The PCU Bonding Package shall contain the following items:

1) If applicable, one 24" x 36" copy of the proposed Final Plat showing the appropriate utility easements, street names, lot numbers, etc.

2) All original executed Polk County Utilities Easement documents that provide for non-platted easements that shall contain portions of the PCU utility system(s). Once reviewed and approved by PCU, and accepted by the COUNTY, these documents shall be recorded by Polk County.

3) A completed PCU Request for Utilities Bond Amount form. The ENGINEER shall provide a certified itemized cost breakdown of all items to be bonded. Items to be bonded shall be grouped by the following categories with each category having a minimum bond amount of 110% of the value of the required improvements being bonded under performance in accordance with LDC Section 807.C.3.

   i. Final Record Drawings of the project's complete construction

   ii. Potable water system only punch list deficiencies

   iii. Reclaimed water system only punch list deficiencies

   iv. Wastewater system, including all gravity, lift station, and force main improvements.

4) A completed PCU Request for Utilities Bond form and cashiers check, letter of credit, or other surety authorized to do business within the State of Florida made payable to "Polk County Board of County Commissioners" for bonding outstanding items specified on the PCU Request for Utilities Bond Form. Upon

review and approval, PCU will notify the Land Development Division that the bond items are sufficient for further processing.

C. Submittal

The ENGINEER shall submit this Package to the Land Development Division.

D. PCU Response

Upon receipt of a complete PCU Bonding Package, the Land Development Division shall review the submitted information, and, assuming it is found to be complete, forward the Package to the Development Review Staff within the Land Development Division. The Development Review Staff shall review the submitted information. Upon satisfactory review of documents, PCU shall execute the "PCU Request for Utilities Bond" form and forward it to the appropriate processing entity within the Land Development Division.

Should the Land Development Division determine the Package to be incomplete or any of the information to be unsatisfactory, a letter shall be sent to the ENGINEER stating the deficiencies. No further processing of the Package shall occur until all unsatisfactory items are satisfactorily addressed by the ENGINEER.

2.08 BOARD ACCEPTANCE REQUEST PACKAGE

A. Applicability

This Package is required for all projects with utility systems that are to be accepted by PCU for ownership, operation, and maintenance.

B. Contents

The Board Acceptance Package shall contain the following items, as applicable:

1) Original Developer's Letter of Dedication.
2) Original Engineer's Certificate of Completion.
3) Original Contractor's Certificate of Completion.
4) Potable Water System Schedule of Values.
5) Wastewater System Schedule of Values.
6) Reclaimed Water System Schedule of Values.
7) All original executed Polk County Utilities Easement documents that provide for non-platted easements containing portions of the PCU utility system(s). Once reviewed and approved by PCU, and accepted by the COUNTY, these documents shall be recorded by Polk County.
8) Completed and executed Request for Utilities Bond Amount Form.

9) Warranty Surety, based upon the Engineer's signed and sealed cost estimate.
10) Any additional information required pursuant to a Developer/Utilities Agreement.
11) Final Record Drawings that are in accordance with the Section entitled "Project Design Documents and Submittals".

C. Submittal

The ENGINEER shall submit this Package to the Land Development Division.

D. PCU Response

Upon receipt of a complete Board Acceptance Request Package, the Development Review staff shall review the submitted information for completeness and accuracy. Should any of the information be incomplete or unsatisfactory, a letter shall be sent to the ENGINEER stating the deficiencies. No further processing of the Package shall occur until all incomplete and/or unsatisfactory items are satisfactorily addressed by the ENGINEER.

PART 3 PROJECT ACCEPTANCE DOCUMENTATION

3.01 Record Documents

A. General

1. Three sets of certified, full size, black line prints of the RECORD DRAWINGs signed and sealed by the ENGINEER.
2. A digital version of the certified, hard copy RECORD DRAWING in tagged information file (tif) format OR portable document file (pdf) format.
3. The CONTRACTOR shall be responsible for recording information on the approved PLANS concurrently with construction progress.
4. The ENGINEER shall be responsible for preparing accurate RECORD DRAWINGS in accordance with Section 61G15-30.002(9) F.A.C. which presently requires the following minimum information be included if the ENGINEER is relying on information from others:
   a. A statement that the documents are a compiled representation of the constructed project.
   b. A listing of the sources and the basis of the information used in the preparation of the documents.
   c. A statement that the documents are believed to be correct to the best of the ENGINEER's knowledge and that the accuracy of the information cannot be guaranteed.
5. RECORD DRAWINGS shall be legibly marked to record actual construction.
6. RECORD DRAWINGS shall show location of all underground and above ground water, wastewater and reclaimed water piping and related appurtenances, based

upon record survey information. All above ground piping and surface utility features such as valves, hydrants, blow-offs, manholes, cleanouts, etc. shall be clearly shown and referenced to a minimum of two permanent surface improvements and/or surveyed road centerlines points.

7. RECORD DRAWINGS shall identify actual installed pipe, valves, fittings, hydrants and other assets. All assets that are different from those shown on the approved PLANS shall be attributed with materials, class, pressure rating, specifications, etc.
8. RECORD DRAWINGS shall clearly show all field changes of dimension and detail including changes made by field order or by change order.
9. RECORD DRAWINGS shall clearly show all details not on original contract drawings but constructed in the field. All equipment and piping relocation shall be clearly shown.
10. RECORD DRAWINGS shall clearly show the actual horizontal locations, distances, and vertical elevations of all utility assets. State plane coordinates shall be utilized for horizontal locations.
11. Dimensions between all manholes, slope of gravity mains, invert and top elevations shall be shown.
12. The RECORD DRAWINGS shall be properly signed and sealed by the ENGINEER. Should information from the CONTRACTOR be utilized by the ENGINEER in preparing the RECORD DRAWINGS, the licensee name and certification number of the CONTRACTOR shall be included.
13. After the successful completion of all water, wastewater, and reclaimed water improvements, final RECORD DRAWINGS shall be submitted to PCU by the ENGINEER. The RECORD DRAWINGS must be approved by PCU prior to BOARD acceptance of the improvements.

B. SURVEY REQUIREMENTS:

1. An As-Built or Record Survey performed in accordance with Chapter 5J-17, Florida Administrative Code (F.A.C.), pursuant to Chapter 472, Florida Statutes (F.S.) shall be required.
    i. The survey shall depict all pertinent easement lines, right of way lines or boundary lines as well as the horizontal and vertical location of all underground and above ground water, wastewater and reclaimed water piping and related appurtenances. The piping shall be shown at intervals not to exceed 100 feet. Sufficient “spot” elevations shall be shown in order to determine grading over and adjacent to the piping as well as the amount of cover over the piping. For lift stations: horizontal and vertical locations of the center top and invert of the wet well as well as horizontal and vertical locations of all at grade concrete and sufficient “spot elevations” to be able determine the drainage pattern within and adjacent to the lift station easement or tract. All existing fencing around lift stations shall be horizontally located with the type of fencing and

height of fencing stated. In the event that fee simple title is conveyed to Polk County for a lift station or other facility a Boundary Survey shall be required in addition to the As-Built Survey.

2. For any other instance not described above, it is the Surveyor's responsibility to determine the type of survey required based upon actual site activity and construction. Examples of survey type include but are not limited to:
   i. As-Built or Record Survey
   ii. Boundary Survey
   iii. Topographic Survey
   iv. Construction Layout Survey, etc.

Any deviation from the types listed above requires the approval of the County Surveyor or County Survey Manager.

C. GPS coordinate data shall be provided as part of all PCU CIP projects and where PCU reimburses the DEVELOPER for the installation or oversizing of any proposed facilities and infrastructure. The data shall include the type of collection, i.e., real time correction or post processed, hardware and software used, and the track log file associated with the actual data collection. The GPS coordinate data and associated attributes shall be provided in an acceptable geo-database, shape file, comma delimited, or other file format subject to PCU approval. Attribute data associated with this data shall include:
   1. X (Easting) and Y (Northing)
   2. Z (Elevation), when available
   3. Utility Type (Potable Water, Wastewater, Reclaimed Water, and Raw Water)
   4. Type Feature (Point on Line, Valve, Bend, Meter, Manhole, Blow-Off, Tee, ARV, Jack and Bore, Directional Bore, etc.)
   5. Pipe Diameters
   6. Material Type
   7. Electronic Sealing

D. Electronic files shall be signed and sealed in accordance with Florida Statutes and the Florida Administrative Code.

PART 4 ACCEPTANCE DOCUMENTATION

4.01 General

A. Prior to the COUNTY's final acceptance of any new utilities improvements, the following documents must be received, reviewed, and found acceptable by PCU for each applicable water, wastewater, and reclaimed water system at least 45 calendar days prior to the next available County Commission Board date.

4.02 Deliverables

A. Specific itemized cost breakdown based on final component construction costs related to potable water, reclaimed water, and wastewater utilities with ENGINEER's certification.

B. Specific itemized cost breakdown for the lift station components, including wet well, pumps, piping, electrical, and site work based on final construction costs with ENGINEER's certification, when applicable.

C. Copies of all soils testing reports regarding on all utilities improvements to be conveyed to PCU.

D. One set of all bacteriological test reports.

E. Lift Station Startup Report, when applicable.

F. Two sets of hard copies and one electronic copy in Adobe Acrobat protected document file (pdf) format of the Operation and Maintenance Manual for the lift station and any other equipment, when applicable.

G. A fully executed Florida Department of Environmental Protection "Domestic Wastewater Collection/Transmission Systems Certificate of Completion of Construction" necessary to obtain clearance of the system for service, when applicable.

H. A fully executed Florida Department of Environmental Protection "Certification of Construction Completion and Request for a Letter of Clearance to Place a Public Drinking Water Facility into Service" and any required attachments necessary to obtain clearance of the system for service, when applicable.

I. Originals of all Polk County Utilities Easement and Warranty Deed documents ready for acceptance and recording by the COUNTY, when applicable.

J. Maintenance, Materials, and Workmanship Warranty document and Bond with original signatures.

4.03 Acceptance of Improvements

A. Final Acceptance

1. Final acceptance by the COUNTY of a water distribution/transmission system, wastewater collection/transmission system, and/or reclaimed water distribution/transmission system, and the release of the performance bond will be made only after all inspections have been made, all regulatory clearances have been received, and the improvements found to be in accordance with the applicable requirements of this MANUAL, the LAND DEVELOPMENT CODE, and the regulations of FDEP.

B. Maintenance, Materials, and Workmanship Warranty or Bond

1. A PCU approved warranty document shall be executed by the DEVELOPER to warrant the maintenance, materials, and workmanship for all improvements intended to be owned and maintained by PCU for a one calendar year period, commencing on the date of formal acceptance by the COUNTY.

2. A bond payable to PCU shall be posted by the DEVELOPER that is executed by a financial institution authorized to do business in the State of Florida that is satisfactory to PCU. The bond shall be in the amount of 10 percent of the final construction costs of all required water, wastewater, and reclaimed water improvements to be owned and maintained by PCU. Such bond shall guarantee maintenance, materials, and workmanship of all improvements intended to be owned and maintained by PCU for a minimum of a one calendar year period commencing on the date of formal acceptance by the COUNTY. As an alternative to the provision of a surety bond, the DEVELOPER may provide for the deposit of cash in an escrow account at or a letter of credit from a financial institution authorized to do business in the State of Florida in a form acceptable to the COUNTY.
3. PCU shall perform an inspection of all improvements and the RECORD DRAWINGS approximately 30 calendar days prior to the expiration of the any warranty or bond. PCU shall notify the DEVELOPER and ENGINEER in writing of the inspection. The attendance of the DEVELOPER and ENGINEER shall be mandatory. A list of deficiencies shall be developed and transmitted to the DEVELOPER and ENGINEER. The DEVELOPER and ENGINEER shall correct all deficiencies within 30 calendar days of receipt and then notify PCU upon completion to request a re-inspection. The warranty or bond shall not expire until all deficiencies have been corrected.

C. Extent of PCU Maintenance

1. PCU shall be responsible only for the repair and maintenance of the public components of the PCU utility system. PCU shall not be responsible for the repair and maintenance of house connections or service laterals or for privately owned utility systems. PCU will maintain potable and reclaimed water lines up to and including meters only, and will not repair or maintain any component downstream of the meter, including house connections and service laterals.
2. PCU will only maintain sanitary sewer lines manhole to manhole. PCU will not repair or maintain any component upstream of the sewer line including clean outs, meters, house connections or service laterals.
3. No person shall do any work, or be reimbursed for any work or in connection with any work, on the PCU utility system unless written authorization from PCU is received prior to said work is being started.
4. PCU shall make a reasonable effort to inspect and keep its facilities in good repair, but assumes no liability for any damage caused by the utility system, including damage due to sewage back-ups, disruption of services, breaking of pipes, poor quality of water caused by unauthorized or illegal entry of foreign material into the system, faulty operation of fire protection facilities, or any other reasons.

PART 5 CONSTRUCTION COORDINATION MEETINGS

5.01 GENERAL

This Section establishes the minimum number of meetings necessary for the initiation and inspection of utility related construction activities.

5.02 PROJECT COORDINATION MEETINGS

As a minimum, the following three types of meetings will be held in conjunction with a project.

A. Pre-Construction Meeting

The ENGINEER shall request the scheduling of the pre-construction meeting through the Growth Management Department. A minimum of five business days prior to the desired meeting date is required for scheduling purposes. Attendees shall include the ENGINEER, the CONTRACTOR, Development Review staff within the Growth Management Department, Utilities Operations Division staff, and the INSPECTOR. The ENGINEER shall be responsible for notifying all other affected utility companies and other interested parties of the meeting. Whenever possible, combined pre-construction meetings shall be held jointly between PCU and the County Engineer's Office.

B. Formal Walk-Through Inspection Meeting

Once the CONTRACTOR has received satisfactory results as the result of informal walk through inspections with the INSPECTOR and believes that the improvements has been completed in accordance with the PLANS, the CONTRACTOR shall request the scheduling of a formal walk-through inspection meeting through the Growth Management Department to perform an inspection of completed construction. Attendees shall include the ENGINEER, the CONTRACTOR, Development Review staff within the Growth Management Department, Utilities Operations Division staff, and the INSPECTOR. A minimum of five (5) business days before the desired meeting date is required for scheduling purposes.

During this meeting, a punch list of incomplete or deficient work will be prepared. The INSPECTOR is responsible for collecting and compiling comments from other parties and providing the CONTRACTOR with a comprehensive punch list. The CONTRACTOR shall commit to a firm timetable to fully resolve all incomplete or deficient work. Only new incomplete work or deficiencies generated as the result of work performed by the CONTRACTOR to resolve previously identified incomplete work or deficiencies shall be added to the INSPECTOR's original comprehensive punch list.

If, in the opinion of PCU, a follow-up formal walk-through inspection meeting is necessary, then this process will be repeated.

C. Formal Lift Station Start-up Meeting

Once the CONTRACTOR has received satisfactory results as the result of performing preliminary start-up testing on the lift station and believes that the lift station has been completed in accordance with the PLANS, the CONTRACTOR shall be responsible for scheduling the formal lift station start-up inspection meeting through the Growth Management Department. The CONTRACTOR, the ENGINEER, the INSPECTOR, PCU operations staff, and representatives of the control panel supplier and the pump manufacturer shall attend this meeting. Where applicable, a representative of the emergency generator set shall also attend. A minimum of five (5) business days advanced notice is required for scheduling purposes.

During this meeting, a punch list of incomplete or deficient work will be prepared by the INSPECTOR. The INSPECTOR is responsible for collecting and compiling comments from other parties and providing the CONTRACTOR with a comprehensive punch list. The CONTRACTOR shall commit to a firm timetable to fully resolve all incomplete or deficient work. Only new incomplete work or deficiencies generated as the result of work performed by the CONTRACTOR to resolve previously identified incomplete work or deficiencies shall be added to the INSPECTOR's original comprehensive punch list.

If, in the opinion of PCU, a follow-up formal lift station start-up inspection meeting is necessary, then this process will be repeated.

PART 6 CONSTRUCTION PLAN TIME LIMITATIONS

A. PLAN SUBMITTAL

1. Construction PLANS submitted for review shall comply with the latest approved version of this MANUAL at the time of initial plan submittal as long as PLANS are approved within 180 calendar days from initial submittal.
2. If full COUNTY approval is not obtained within 180 calendar days from initial submittal, the PLANS and related documents shall be revised to be consistent with the latest approved version of this MANUAL in effect at that point in time.

B. APPROVED CONSTRUCTION PLANS

1. Commencement of construction shall be in accordance with the LAND DEVELOPMENT CODE.
2. If construction has not commenced within the time period stated in the LAND DEVELOPMENT CODE, the construction PLANS and related documents shall be

resubmitted. The resubmitted construction PLANS be consistent with the latest approved version of this MANUAL in effect at the time of resubmission.

CHAPTER 2 DEVELOPMENT COORDINATION Rev May 2013

Section 211 Project Design Documents and Submittals December 2010

PART 1 GENERAL

1.01 Purpose

A. This Section establishes the minimum requirements for project design documents, hydraulic calculations, and submittals that are required to be submitted to the COUNTY for proposed water, wastewater, and reclaimed water improvements.

1.02 Survey Control and Datum

A. Drawings shall be geographically oriented in the Florida State Plane Coordinate System with regard to the project's location within Polk County.

B. Horizontal and vertical control shall be used by the ENGINEER in preparing the construction PLANS and established at the project site by a SURVEYOR utilizing the following datum.

1. Horizontal:

   Coordinate System: Florida State Plane West.

   Units: United States survey feet.

   Horizontal Datum: North American Datum of 1983 (NAD 83) latest National Geodetic Survey (NGS) adjustment.

2. Vertical:

   Units: United States survey feet.

   Vertical Datum:

   North American Vertical Datum of 1988 (NAVD 88).

Table 211-1. Minimum Spatial Data Accuracy Levels.

Asset	Horizontal Accuracy (feet)	Elevation Accuracy (feet)	Location: horizontal center and vertical top, unless otherwise specified
Bench Marks	N/A	0.01	Point
Horizontal Control	0.01	N/A	Point

1.03 Documents

A. The drawing sets shall be complete and include the title sheet, plan/profile sheets, cross-sections, and details. Depending on the size and scale of a project, overall utility plan sheets may be required in addition to plan/profile sheets. Submitting drawing sets that only include plan/profile sheets without an overall utility plan sheet is strictly subject to County approval. Project scale may necessitate the use of

multiple sheets to present the overall utility plan at the largest practical scale to be incorporated with construction and final record drawings. Each individual sheet contained in the printed set of the drawings shall be included in the electronic submittal, with each sheet being converted into an individual pdf (portable document file) or tif (tagged image file). The plan sheets shall be scanned in pdf or tif format Group 4 at 300 dpi resolution to maintain legibility of each drawing.

PART 2 DESIGN DOCUMENTATION

2.01 Construction PLANS Approval

A. The following documents are required from the ENGINEER and shall be submitted to the Land Development Division for distribution and review by the Development Review Staff.

1. When the construction PLANS are approved by the COUNTY, the Land Development Division shall provide one (1) set of certified, full size, hard copy sets of the construction PLANS to PCU.
2. In the event that the approved construction PLANS are modified by a State, County, or Local authority, the ENGINEER shall be responsible for revising and resubmitting the PLANS to the Land Development Division for distribution to the Development Review Staff for review, comment, and consideration for approval at least 10 business days prior to construction. When the modified construction PLANS are approved by the COUNTY, the Land Development Division shall provide one (1) set of certified, full size, hard copy sets of the modified construction PLANS to PCU

2.02 System Modeling Analysis

A. WATER, WASTEWATER, AND RECLAIMED WATER SYSTEMS

1. The ENGINEER shall submit one copy of all system modeling calculations to the Land Development Division with the construction PLANS that address the required fire flow demand, maximum day demand, peak hour demand, and locations of proposed connection points. All system modeling shall utilize either a Water Cad or WaterGems modeling program for water systems and/or a SewerCad modeling program for wastewater systems in accordance with the hydraulic modeling standards provided in this MANUAL as appropriate for the system being analyzed. When providing connection point locations, an engineering sketch with an address or parcel identification number for each individual location shall be included. The Land Development Division shall request PCU to analyze the impact of the proposed development on the existing PCU water, wastewater, and reclaimed water systems utilizing the appropriate PCU master plan system models. PCU shall provide the results of each individual system analysis to the Land Development Division for distribution to the ENGINEER in the event that deficiencies are revealed. ENGINEER shall resolve all such deficiencies to the satisfaction of PCU

2.03 MASTER PLAN

CHAPTER 2 DEVELOPMENT COORDINATION

Section 211 Project Design Documents and Submittals December 2010

A. General

A MASTER PLAN for each water, wastewater and/or reclaimed water system is required to be submitted by the ENGINEER for projects constructed in multiple phases and shall be submitted to the Growth Management Department for distribution to PCU.

1. Two sets of certified hard copy MASTER PLAN for each water, wastewater and reclaimed water system.
2. Each MASTER PLAN submittal shall include a copy of the PCU response to the hydraulic grade line request letter.
3. The MASTER PLAN submittal shall include the individual system layout and design calculations for each system. The MASTER PLAN shall be signed, sealed, and dated by the ENGINEER.
4. For significant changes to the project, the ENGINEER shall submit a revised and updated MASTER PLAN.
5. The MASTER PLAN shall include separate layouts for each water, wastewater, and/or reclaimed water system. The MASTER PLAN sheet(s) shall include the following general items.
   a. Minimum scale of 1 inch equals 200 feet.
   b. Topography.
   c. Lines indicating planned development phasing.
   d. Existing/proposed improvements in sufficient detail for demonstration of design intent.
   e. Identity of utilities service providers.

B. Water

1. Calculations for potable water demand shall be based on projected ultimate development. Two flow scenarios shall be calculated and provided.
   a. Maximum day flow plus fire flow.
   b. Peak hour flow.
2. A summary of each unit or tract stating type of use (single family residential, master-metered residential, commercial, etc.). Unit flows shall be calculated in accordance with the flow factors contained within the "Utilities Administration Manual".
3. Calculations shall include a pipe network analysis for flow and pressure distribution. The MASTER PLAN shall include connection points to PCU WATER SYSTEM and pipe sizes.
4. Delineate existing, approved, and future units or tracts.
5. Show all existing and proposed pipe diameters.

C. Wastewater

1. Existing manhole inverts and top elevation for the manhole that is being connected to by the new collection system;
2. Pipe diameters (both force mains and gravity mains);
3. Total wastewater flow (both average daily flow and peak hour flow) to each pump station. A summary of each unit or tract stating: type of use (single family residential, master-metered residential, commercial, etc.), and unit flows calculated in accordance with the flow factors contained within the "Utilities Administration Manual".
4. Pump station locations with top and bottom elevations.
5. Delineate existing, approved and future units or tracts.
6. Pump station and manhole nodes and numbers.
7. Location of the 100-year floodplain elevation.

D. Reclaimed Water

1. Calculations for reclaimed water demand shall be based on projected ultimate development utilizing peak hour flow, in accordance with the "Reclaimed Water Main Standards and Specifications".
2. Calculations shall include a pipe network analysis for flow and pressure distribution. The MASTER PLAN shall include connection points and pipe sizes.
3. Clear delineation of existing, approved and future units or tracts.
4. Show all existing and proposed pipe diameters.

2.04 Construction PLANS

A. Drawings shall show location of existing and proposed underground and above ground water, wastewater, and reclaimed water piping and related appurtenances within the project area.

B. Construction PLANS shall be submitted in hard copy form formatted to a standard size sheet (24 inches by 36 inches). Smaller size sheets (11 inches by 17 inches) shall be acceptable if required by FDOT or other entities.

C. For private development projects, it is recommended that the cover sheet be formatted as described in the STANDARD DETAILS. However, should the ENGINEER elect to utilize a different format, the cover sheet shall include:

1) The full name of the Project.
2) The Section(s), Township(s), and Range(s) in which the Project occurs.
3) The address of the Project, if applicable.
4) The Parcel Identification Number(s) for all parcels of land that the Project encompasses.
5) The PCU Project File Number.
6) The DEVELOPER's name, company name, business address, fax number, and telephone number.

7) The ENGINEER of Record and, as applicable, other design professionals' contact names, company names, business addresses, fax numbers, and telephone numbers.

8) A list of the utilities providers that includes the contact's name, company name, business address, fax number, and telephone number.

9) A map that indicates the entire boundaries of Polk County and includes, as a minimum, the location of the project, major roadways, and a north arrow.

10) A local vicinity map that indicates, as a minimum, the boundaries of the project, roadways, water bodies, and a north arrow. A scale of 1 inch to 100 feet shall be utilized.

11) The standard rectangular notification from the Sunshine State One Call of Florida that includes, as a minimum, the words "Call 48 Hours Before You Dig, It's The Law, Dial 811, and Know What's Below".

12) An index to all sheets.

13) A reserved area of sufficient size on the right side of the cover sheet for the use by the County staff for plan stamping. This area shall also contain a listing of all Federal, State, and local permits and numbers that are required for the Project.

14) A signature block for the ENGINEER of Record that contains the words "Construction Drawing" and "Record Drawing" along with check boxes for each, the ENGINEER of Record's record drawing statement, space for the ENGINEER of Record's seal imprint, license number, signature, and date.

Cover sheets for PCU Community Investment Program projects shall conform to the CIP cover sheet format provided in the STANDARD DRAWINGS.

D. On-site WATER, WASTEWATER, AND RECLAIMED WATER SYSTEMS shall be clearly and legibly shown on the same plan sheet. As a minimum, PLANS shall include the following information:

1. Horizontal and vertical controls shall be provided on each sheet.
2. General information such as project name, north arrow, name of ENGINEER, revision block with dates, graphic scale(s) and sheet number.
3. Unless otherwise approved by PCU, the site plans shall be legible and prepared at a recommended horizontal scale of no smaller than 1 inch equals 100 feet. Unless otherwise approved by PCU, plan and profile sheets shall be legible and prepared at a recommended horizontal scale of no smaller than 1 inch equals 30 feet and a recommended vertical scale of no smaller than 1 inch equals 5 feet. Special details shall be of sufficiently large scale to show pertinent construction information.
4. All water, wastewater, and reclaimed water related infrastructure components shall be clearly labeled on the PLANS.
5. For DEVELOPMENTS, all crossings and conflict points with other utilities, drainage systems and structures shall be shown in detail with the best elevation information available to the ENGINEER. PLANS for said DEVELOPMENTs

shall include the following note "All existing utilities at points of conflict shall be field verified by the CONTRACTOR prior to construction and meet minimum spacing requirements." The construction PLANS shall not be approved without this note, as applicable.

6. For all PCU CIP projects, all crossings and conflict points with other utilities, drainage systems and structures shall be shown in detail with field verified elevations. PLANS shall include the following note "All existing utilities at points of conflict have been field verified." The construction PLANS shall not be approved without this note, as applicable.
7. Wastewater gravity mains, bore and jack sections, directional drill sections, and off-site potable water and reclaimed water mains shall be drawn in plan and profile for existing and proposed utility locations and elevations. On-site potable water, wastewater force mains, and reclaimed water mains may be shown in plan view only.
8. Plan and profile views shall be shown on the same sheet. The profile view that corresponds to the plan view shall be vertically aligned at the beginning station in the plan view or the left match line for each sheet.
9. Manholes with invert and rim elevations shall be on the corresponding profile and plan view.
10. Pipe data including size, length, and material type. Provide slopes for wastewater gravity mains.
11. Size, type and locations of fittings, valves, hydrants, air/vacuum release valves, and other related appurtenances.
12. Limits of pipe joint deflections.
13. Limits of changes in pipe linings and coatings other than the standard pipe lining and coating.
14. Limits of restrained joints.
15. Limits of special bedding requirements.
16. Details of connection to the existing system, which has been field verified. Show in a separate detail drawing proposed fittings and restraints.
17. Location(s) and layout of wastewater lift stations. The top elevation of the proposed wet well and the elevation of the centerline of the road at the extension of the access driveway to the lift station shall be provided.
18. Construction notes regarding cover, horizontal and vertical control, special construction requirements, and references to details.
19. Location of the 100-year floodplain elevation shall either be shown or otherwise identified on the PLANS.

F. The PLANS shall include all applicable STANDARD DRAWINGS as shown in this MANUAL. PCU reserves the right to require, as a general rule, the inclusion of composite sheets of STANDARD DRAWINGS, as grouped by water, wastewater, and reclaimed water, with all submittals of the PLANS. Sheets of PLANS containing only PCU developed STANDARD DRAWINGS shall not be required to be signed

and sealed by the ENGINEER. Additional details shall be prepared by the ENGINEER for conditions not included in the STANDARD DRAWINGS such as connections to existing mains, aerial and underwater crossings of rivers, streams, canals and ditches.

G. Modification of the STANDARD DRAWINGS, except for the completion of required information spaces specific to the project, shall be strictly prohibited without written approval by PCU and shall result in PCU rescinding its approval of the PLANS.

CHAPTER 2 DEVELOPMENT COORDINATION

Section 250 STANDARD DRAWINGS

December 2010

DC-01 Private Development Project Cover Sheet (Sample of Recommended Format)
DC-02 Community Investment Project Cover Sheet (Required Format)

CHAPTER 2 DEVELOPMENT COORDINATION

Section 250-A Request for Restricted (Exempted) Information Form

December 2010

Please Print Clearly In Black Ink

TO: **Utilities Development Coordinator**	**FROM:**
	FIRM:
	ADDRESS:
	ADDRESS:
DATE:_____	**PHONE #: ( ) - FAX#: ( ) -**
	E-MAIL ADDRESS:

BE ADVISED THAT THE INFORMATION BEING PROVIDED IS NOT TO BE USED FOR THE DESIGN OR CONSTRUCTION OF ANY BUILDING, DEVELOPMENT, OR OTHER IMPROVEMENTS WITHOUT FIELD VERIFICATION BY THE REQUESTING ENTITY INCLUDING THE USE OF GROUND PENETRATING RADAR AND SOFT DIG VERIFICATION METHODS. THE RECIPIENT'S RELIANCE UPON MAPS, DATA, OR OTHER RECORD INFORMATION IS SOLELY AT HIS OR HER RISK. POLK COUNTY UTILITIES HAS NO ACTUAL OR IMPLIED LIABILITY FOR INCORRECT DRAWINGS, RECORD DRAWINGS, OR OTHER MATERIALS.

IN ACCORDANCE WITH FEDERAL HOMELAND SECURITY AND FLORIDA LAWS [FS 119.071 AND 119.071(3)], THE SHARING OF THE PROVIDED RESTRICTED (EXEMPTED) INFORMATION WITH ENTITIES NOT LISTED ON THIS REQUEST IS STRICTLY PROHIBITED.

RESTRICTED INFORMATION EXEMPTED BY FS 119.071(3) (POTABLE WATER FACILITIES) MAY BE DISCLOSED BY PCU TO ANOTHER GOVERNMENTAL ENTITY, IF DISCLOSURE IS NECESSARY FOR THE RECEIVING ENTITY TO PERFORM ITS DUTIES AND RESPONSIBILITIES, OR A FLORIDA LICENSED ARCHITECT, ENGINEER, OR CONTRACTOR WHO IS PERFORMING WORK ON OR RELATED TO A STRUCTURE OWNED OR OPERATED BY POLK COUNTY, OR UPON SHOWING OF GOOD CAUSE BEFORE A COURT OF COMPETENT JURISDICTION.

I have read the above paragraphs and fully acknowledge the matters contained therein and the conditions upon which I will receive the information.

_____
Signature

Restricted (Exempted) information shall only be provided by email, fax, mail, or during an appointment. Please call (863) 298-4176 in advance to set up an appointment to view and/or acquire copies of record drawing information.

Method of Preferred Transmission: ☐**E-Mail** ☐ **Fax** ☐**Mail** ☐**Appointment** ☐**CD**

Property Parcel Number(s):																			
	1.	☐	☐	☐	☐	☐	☐	☐	☐	☐	☐	☐	☐	☐	☐	☐	☐	☐	☐
	2.	☐	☐	☐	☐	☐	☐	☐	☐	☐	☐	☐	☐	☐	☐	☐	☐	☐	☐
	3.	☐	☐	☐	☐	☐	☐	☐	☐	☐	☐	☐	☐	☐	☐	☐	☐	☐	☐
	4.	☐	☐	☐	☐	☐	☐	☐	☐	☐	☐	☐	☐	☐	☐	☐	☐	☐	☐

Address/Location: _____

(IF ADDITIONAL SPACE IS REQUIRED – PLEASE ATTACH A SEPARATE SHEET)

Please e-mail this fully completed request to utilities@polk-county.net . If you are unable to e-mail the completed request, please fax to (863) 534-5908. If you should have any questions or require assistance, please feel free to call our office at (863) 534-6449.

Section 250-B Records Distribution Tracking

December 2010

(FOR PCU STAFF USE ONLY)

Please Print Clearly In Black Ink

PCU STAFF MEMBER	**REQUESTING PARTY** **(ALL INFORMATION IS TO BE MADE VOLUNTARILY)**
NAME: ______________________________	**NAME:**
TITLE: ______________________________	**FIRM:**
	ADDRESS:
	ADDRESS:
DATE: ____________________	**PHONE #: ( ) - FAX#: ( ) -**
	E-MAIL ADDRESS:

Method of Transmission of Copies: ☐**E-Mail** ☐ **Fax** ☐**Mail** ☐**Appointment** ☐**CD** ☐**Verbal**

Indicate by a Check in the Box that each of the following items has been addressed by the PCU staff member completing this form:

☐ **<u>Have all copies of printed information been stamped with the following statement</u>? "BE ADVISED THAT THE INFORMATION BEING PROVIDED IS NOT TO BE USED FOR THE DESIGN OR CONSTRUCTION OF ANY BUILDING, DEVELOPMENT, OR OTHER IMPROVEMENTS WITHOUT FIELD VERIFICATION BY THE REQUESTING ENTITY INCLUDING THE USE OF GROUND PENETRATING RADAR AND SOFT DIG VERIFICATION METHODS. THE RECIPIENT'S RELIANCE UPON MAPS, DATA, OR OTHER RECORD INFORMATION IS SOLELY AT HIS OR HER RISK. POLK COUNTY UTILITIESNT HAS NO ACTUAL OR IMPLIED LIABILITY FOR INCORRECT DRAWINGS, RECORD DRAWINGS, OR OTHER MATERIALS".**

☐ **<u>Has the requesting party asked for restricted (exempted) information regarding Water Production Facilities</u>? <u>If so, please state</u>: "IN ACCORDANCE WITH FEDERAL HOMELAND SECURITY AND FLORIDA LAWS [FS 119.071 AND 119.071(3)], THE SHARING OF RESTRICTED INFORMATION REGARDING WATER PRODUCTION FACILITIES IS STRICTLY PROHIBITED".**

☐ **<u>Are the records being requested by another governmental entity or a licensed professional performing work for Polk County</u>? WATER PRODUCTION FACILITIES INFORMATION MAY BE DISCLOSED BY PCU TO ANOTHER GOVERNMENTAL ENTITY IN ACCORDANCE WITH FS 119.071(3), IF DISCLOSURE IS NECESSARY FOR THE RECEIVING ENTITY TO PERFORM ITS DUTIES AND RESPONSIBILITIES, OR A FLORIDA LICENSED ARCHITECT, ENGINEER, OR CONTRACTOR WHO IS PERFORMING WORK ON OR RELATED TO A STRUCTURE OWNED OR OPERATED BY POLK COUNTY, OR UPON SHOWING OF GOOD CAUSE BEFORE A COURT OF COMPETENT JURISDICTION.**

Property Parcel Number(s):	**1.**	☐	☐	☐	☐	☐	☐	☐	☐	☐	☐	☐	☐	☐	☐	☐	☐	☐	☐
	2.	☐	☐	☐	☐	☐	☐	☐	☐	☐	☐	☐	☐	☐	☐	☐	☐	☐	☐
	3.	☐	☐	☐	☐	☐	☐	☐	☐	☐	☐	☐	☐	☐	☐	☐	☐	☐	☐
	4.	☐	☐	☐	☐	☐	☐	☐	☐	☐	☐	☐	☐	☐	☐	☐	☐	☐	☐

Address/Location: ____

Information Provided:

____

____

____

(IF ADDITIONAL SPACE IS REQUIRED – PLEASE ATTACH A SEPARATE SHEET)

CHAPTER 2 **DEVELOPMENT COORDINATION** Rev September 2014

Section 250-C **Request for Utilities Bond** December 2010

Engineer: _____
Developer: _____
Project: _____
PCU Project No.: _____

I, as the DEVELOPER of the above subject project, fully understand and am aware that the following items are the only potable water, reclaimed water, and/or wastewater system components acceptable for bonding for PCU's approval of the subject project for acceptance or plat for recording. I further acknowledge that these requested bond amounts are based on the attached certified itemized construction cost (CICC) breakdown provided by the project's design engineer.

Item Description	Minimum Amount*	Certified Actual Amount
Final Record Drawings of complete project construction	110 % of Total Project CICC	$
Potable water distribution system punch list deficiencies	110 % of Total Potable Water Distribution CICC	$
Reclaimed water distribution system punch list deficiencies	110 % of Total Reclaimed Water Distribution CICC	$
Wastewater collection/transmission system punch list deficiencies	110 % of Total Wastewater Collection/Trans. CICC	$
Lift station punch list deficiencies	110 % of Total Lift Station CICC	$
Total Amount of Utilities Bond		$

* The minimum acceptable bond amount for each item shall be the actual amount for the uncompleted portion of work as based on the CICC or the specified minimum percentage, whichever is higher.

_____ _____

Developer's Signature Date Development Coordinator's Signature Date

The proposed Bond has been reviewed and approved by:

_____

Utilities Engineering Manager's Signature Date

CHAPTER 2 DEVELOPMENT COORDINATION Rev September 2014

Section 250-D Developer's Letter of Dedication & Statement of Warranty December 2010

Project: _____

PCU Project No.: _____

I, as the DEVELOPER of the above subject project, hereby dedicate to PCU all applicable water, wastewater, and/or reclaimed water systems constructed as part of, and in conjunction with the subject project for ownership, operation, and maintenance responsibility. Further, I certify that all bills relative to this project have been paid, and there are no liens or other encumbrances against the project.

All construction, materials, and workmanship are warranted for one (1) calendar year from the date of acceptance by the Board of County Commissioners.

_____	_____	_____
Developer's Signature	Date	Developer's Firm Name

_____	_____	_____
Developer's Typed Name	Telephone Number	Fax Number

_____	_____
Developer's Mailing Address	Developer's Physical Address

CHAPTER 2 **DEVELOPMENT COORDINATION** Rev September 2014

Section 250-E **Engineer of Record's Letter of Certification** December 2010

Project: _____

PCU Project No.: _____

I, as ENGINEER OF RECORD for the above subject project, hereby certify to PCU that all applicable water, wastewater, and/or reclaimed water systems constructed as part of, and in conjunction with the subject project are completed in conformance with the Construction Plans as approved by PCU and all State of Florida construction permit conditions. These utility systems are complete, functional, ready to be placed into operation to provide service to the public, and ready for PCU acceptance, ownership, operation, and maintenance responsibility.

The Record Drawings accurately reflect all utility system information, to include: each and every water, wastewater, and reclaimed water service, tap, clean-out, valve, fire hydrant, fitting, casing, and pipe referenced either from at least two fixed and easily found reference points (e.g., property corners, manhole lids, valve covers, etc.) or by the use of stations and offsets from the center of wastewater manholes or inline valves, as applicable. Depths, material specifications, and sizes of pipes, valves, and fittings are indicated on the Record Drawings. Lot numbers, street names, locations of easements, property boundaries, etc. are shown on the Record Drawings and are consistent with the approved Recorded Plat. Horizontal dimensions and distances shown are within 0.1 foot accuracy. Vertical dimensions, elevations, and distances are within 0.1 foot accuracy.

_____ _____ _____

Engineer's Signature Date Florida P. E. Registration Number

_____ _____

Engineer's typed Name Engineer's Firm Name

_____

_____

Engineer's Physical Address

_____ Affix Seal

_____

Engineer's Mailing Address

_____

Telephone Number

_____

Fax Number

CHAPTER 2 **DEVELOPMENT COORDINATION** Rev September 2014

Section 250-F **Contractor's Letter of Certification** December 2010

Project: _____

PCU Project No.: _____

I, as the CONTRACTOR for the above subject project, hereby certify to PCU that the water ____, wastewater ____, and/or reclaimed water ____ system (*check all that apply*) constructed as part of, and in conjunction with the above subject project are completed and in conformance with the Construction Plans approved by PCU, and State of Florida construction permit conditions. These utility systems are complete, functional, ready to be placed into operation to provide service to the public, and ready for County acceptance for PCU to take ownership, operation, and maintenance responsibility.

The Record Drawings accurately reflect all utility system information, to include: each and every water, wastewater, and reclaimed water service, tap, clean-out, valve, fire hydrant, fitting, casing, and pipe referenced either from at least two fixed and easily found reference points (e.g., property corners, manhole lids, valve lids, etc.) or by the use of stations and offsets from the center of wastewater manholes or inline valves, as applicable. Depths, material specifications, and sizes of pipes, valves, and fittings are indicated on the Record Drawings. Lot numbers, street names, locations of easements, property boundaries, etc. are shown on the Record Drawings and are consistent with the approved Recorded Plat. Horizontal dimensions and distances shown are within 0.1 foot accuracy. Vertical dimensions, elevations, and distances are within 0.1 foot accuracy.

All construction materials and workmanship is warranted for one (1) calendar year from the date of acceptance by the Board of County Commissioners.

_____ _____ _____

Contractor's Signature Date Florida License Number

_____ _____

Contractor's typed Name Contractor's Firm Name

_____ _____

_____ _____

Contractor's Physical Address Contractor's Mailing Address

_____

Telephone Number

_____

Fax Number

CHAPTER 2 DEVELOPMENT COORDINATION

Section 250-G

December 2010

THIS SECTION IS INTENTIONALLY BLANK

CHAPTER 2 DEVELOPMENT COORDINATION

Section 250-H

December 2010

THIS SECTION IS INTENTIONALLY BLANK

CHAPTER 2 DEVELOPMENT COORDINATION

Section 250-I

December 2010

THIS SECTION IS INTENTIONALLY BLANK

REQUEST TO CONNECT TO EXISTING PCU MAIN

(Tie-ins cannot be made on Friday or any day prior to a Holiday)

PROJECT NAME:
PCU # TYPE: R/R ☐ CIP ☐ Development ☐

☐ POTABLE WATER ☐ RAW WATER ☐ RECLAIM WATER
☐ GRAVITY WASTEWATER ☐ FORCE MAIN

Proposed Day and Time:
Ops Initials

SYSTEM NAME/LOCATION:
☐ NE ☐ NW ☐ CENTRAL ☐ SW
☐ EAST ☐ SE ☐ OTHER ( )

Actual Day and Time:

BRIEF DIRECTIONS TO OR LOCATION OFJOB-SITE:

CONTRACTOR:

Name & Phone # of Contact:

5 day advance notice provided ☐ Yes ☐ No
2 day advance notice provided (emergency only) ☐ Yes ☐ No

TYPE OF CONNECTION:

POTABLE / RAW WATER:
Size (new) ____
Size (exist) ____
☐ WET-TAP ☐ EXIST VALVE
☐ EXIST STUB / TEE ☐ OTHER _____
☐ DATE OF D.O.H. CLEARANCE LETTER _____
☐ PLACE IN SERVICE

FORCE MAIN:
Size (new) ____
Size (exist) ____
☐ WET-TAP ☐ EXIST VALVE
☐ CORE M.H. ☐ OTHER _____

GRAVITY WASTEWATER:
Size (new) ____
Size (exist) ____
☐ CORE M.H. ☐ EXIST LATERAL / STUB
☐ OTHER _____
☐ DATE OF FDEP CLEARANCE LETTER _____
☐ PLACE IN SERVICE

RECLAIMED WATER:
Size (new) ____
Size (exist) ____
☐ WET-TAP ☐ EXIST VALVE ☐ PLACE IN SERVICE
☐ OTHER _____

Comments

Contractor	**Date**	**PCU Project Manager - CIP or R&R**	**Date**
LDD Lead Development Coordinator	**Date**	**PCU Inspections Supervisor**	**Date**
PCU Operations	**Date**	**PCU Inspector**	**Date**

DISTRIBUTION: White - Project File Yellow - Utilities Communications Pink - Operations Goldenrod - Inspections Supervisor

ALL EXCAVATIONS REQUIRE A MINIMUM 48 HOUR NOTICE TO SUNSHINE ONE CALL 1-800-432-4770.

This Instrument Prepared By:
Polk County Utilities
1011 Jim Keene Blvd.
Winter Haven, FL 33880

POLK COUNTY UTILITIES EASEMENT
(CORPORATE)

THIS INDENTURE, made this _____ day of _____ , 20____A.D., between _____ whose address is_____, County of _____ , and State of _____ , (the GRANTOR), and POLK COUNTY, a political subdivision of the State of Florida, (the GRANTEE),

WITNESSETH, the GRANTOR, for and in consideration of the sum of one dollar and other valuable consideration paid by GRANTEE, receipt whereof is hereby acknowledged, grants and conveys to GRANTEE to, its successors, assigns, licensees, a perpetual Polk County Utilities Easement, as described and illustrated below, which is to be under, upon, and across the property situated in Polk County, Florida, more particularly described as:

(See Attached Exhibit "A" - Legal Description and Exhibit "B" - Sketch)

(Polk County Parcel ID No. _____)

for Polk County owned utilities, which may include but is not limited to potable water, reclaimed water and wastewater facilities hereafter on said property, such easement to include the right of free ingress and egress over and across said property for the purposes of constructing, installing, replacing, operating, and maintaining said utilities. The GRANTEE is hereby granted the right, privilege, and authority to remove, replace, repair, and enlarge said utilities. The GRANTEE is hereby granted the right, privilege, and authority to trim and remove the roots of trees, shrubs, bushes, and plants that may adversely affect the operation of said utilities.

This Grant of Easement shall not be construed as a grant of right of way and is limited to a Polk County Utilities Easement. The GRANTOR shall have the right to use the area subject to the easement granted hereby (the "Easement"), including without limitation for improved parking areas, improved driveways, and landscaping, which are not inconsistent with the use of the Easement by GRANTEE for the purposes granted hereby. Inconsistent improvements to the use of the Easement by the GRANTOR for the purposes granted hereby, including mounded landscaping, building foundations and overhangs, foundations for pole mounted commercial signage, and other permanent structures and related foundations shall be strictly prohibited. With the specific written approval of the County's utilities entity, the limited use of trees, walls, and mounded landscaping may be utilized within the Easement by GRANTOR.

GRANTOR shall not have the right to grant other easements to other parties without the prior written consent of the County's utilities entity. In the event that GRANTEE performs emergency related repairs, unscheduled infrastructure adjustment activities, or scheduled community improvement projects within said Easement, GRANTEE shall be responsible for restoring the

disturbed portions of all existing County approved and permitted improvements in as good or better condition that existed prior to the disturbance activity by GRANTEE.

IN WITNESS WHEREOF, the said GRANTOR has caused these presents to be executed in its name by its proper officers thereunto duly authorized, and its corporate seal to be affixed, the day and year first above written.

SIGNED, SEALED and DELIVERED in the Presence of:

_____	_____
Witness	GRANTOR
_____	_____
Printed Name of Witness	Printed Name of GRANTOR
_____	_____
Witness	Title
_____	
Printed Name of Witness	

STATE OF FLORIDA
COUNTY OF _____

THE FOREGOING instrument was acknowledged before me this _____ day of _____, 20____AD, by _____ who is personally known to me or who has produced _____ as identification.

_____
Notary Public
State of Florida at Large

(Seal)

_____
Printed Name of Notary

Commission No. _____
My commission expires _____

This Instrument Prepared By:
Polk County Utilities
1011 Jim Keene Blvd.
Winter Haven, FL 33880

GRANT OF
POLK COUNTY UTILITIES EASEMENT
(INDIVIDUAL)

THIS INDENTURE, made this _____ day of _____, 20_____ A.D., between _____ whose address is_____, County of _____ , and State of _____ (the GRANTOR), and Polk County, a political subdivision of the State of Florida (the GRANTEE),

WITNESSETH, that the GRANTOR, for and in consideration of the sum of one dollar and other valuable consideration paid by the GRANTEE, receipt whereof is hereby acknowledged, grants and conveys to the GRANTEE, its successors, assigns, licensees, a perpetual Polk County Utilities Easement, as described and illustrated below, which is to be under, upon, and across the property situated in Polk County, Florida, more particularly described as:

(See Attached Exhibit "A" - Legal Description and Exhibit "B" - Sketch)

(Polk County Parcel ID No. _____)

for Polk County owned utilities, hereafter on said property, such easement to include the right of free ingress and egress over and across said property for the purposes of constructing, installing, replacing, operating, and maintaining said utilities. The GRANTEE is hereby granted the right, privilege, and authority to remove, replace, repair, and enlarge said utilities. The GRANTEE is hereby granted the right, privilege, and authority to trim and remove the roots of trees, shrubs, bushes, and plants that may adversely affect the operation of said utilities.

This Grant of Easement shall not be construed as a grant of right of way and is limited to a Polk County Utilities Easement. The GRANTOR shall have the right to use the area subject to the easement granted hereby (the "Easement"), including without limitation for improved parking areas, improved driveways, and landscaping, which are not inconsistent with the use of the Easement by the GRANTEE for the purposes granted hereby. Inconsistent improvements to the use of the Easement by the GRANTOR for the purposes granted hereby, including mounded landscaping, building foundations and overhangs, foundations for pole mounted commercial signage, and other permanent structures and related foundations shall be strictly prohibited. With the specific written approval of the County's utilities entity, the limited use of trees, walls, and mounded landscaping may be utilized within the Easement by the GRANTOR.

The GRANTOR shall not grant other easements to other parties without the prior written consent of the County's utilities entity. In the event that the GRANTEE performs emergency related repairs, unscheduled infrastructure adjustment activities, or scheduled community improvement projects within said Easement, the GRANTEE shall be responsible for restoring the disturbed portions of all existing County approved and permitted improvements in as good or better

condition that existed prior to the disturbance activity by the GRANTEE.

IN WITNESS WHEREOF, the GRANTOR hereunto set his/her hand and seal on the date first above written.

SIGNED, SEALED, AND DELIVERED IN THE PRESENCE OF:

_____ By: _____

_____ _____
(Printed Name of Witness) (Printed Name)

_____ Address: _____

_____ _____
(Printed Name of Witness)

STATE OF FLORIDA, COUNTY OF _____

The foregoing instrument was acknowledged before me this _____ day of _____ , 20____ A.D. by _____ , the _____of _____ , who is personally known to me or who provided _____ as identification.

_____ Notary Public - State of Florida
(Printed Name)

POLK COUNTY UTILITIES, FLORIDA

UTILITIES COMMUNITY INVESTMENT PROJECT

PROJECT NAME
PROJECT NAME

RANGE XX, TOWNSHIP XX, SECTION XX
(ADDRESS, IF APPLICABLE)
PARCEL ID # XXXXXX XXXXXX XXXXXX
PCU PROJECT # XXXX.XXX.XX.XX
ORACLE PROJECT # XXXXXXX

DRAWING INDEX

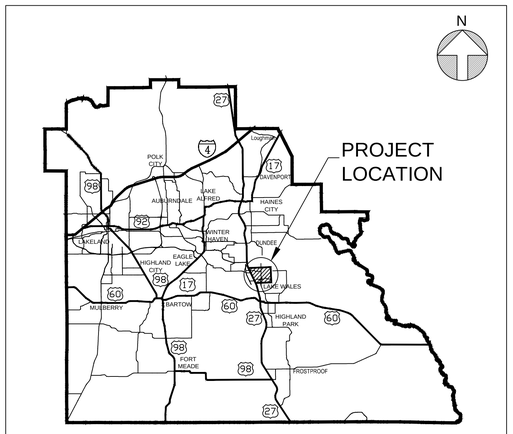

POLK COUNTY, FLORIDA
LOCATION MAP

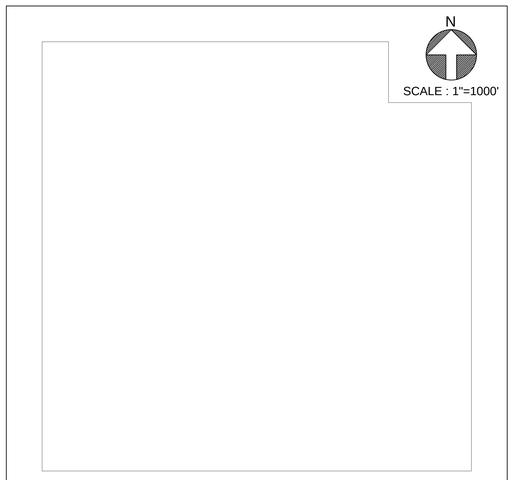

VICINITY MAP

UTILITIES PROVIDERS LIST

1 CONTACT NAME
COMPANY NAME
XXX STREET NAME
CITY NAME, STATE NAME, ZIP
(XXX) XXX- XXXX

2 CONTACT NAME
COMPANY NAME
XXX STREET NAME
CITY NAME, STATE NAME, ZIP
(XXX) XXX- XXXX

3 CONTACT NAME
COMPANY NAME
XXX STREET NAME
CITY NAME, STATE NAME, ZIP
(XXX) XXX- XXXX

4 CONTACT NAME
COMPANY NAME
XXX STREET NAME
CITY NAME, STATE NAME, ZIP
(XXX) XXX- XXXX

5 CONTACT NAME
COMPANY NAME
XXX STREET NAME
CITY NAME, STATE NAME, ZIP
(XXX) XXX- XXXX

BOARD OF COUNTY COMMISSIONERS

DISTRICT ONE	: GEORGE LINDSEY III
DISTRICT TWO	: MELONY M. BELL
DISTRICT THREE	: EDWIN V. SMITH
DISTRICT FOUR	: R. TODD DANTZLER
DISTRICT FIVE	: JOHN HALL

* DISTRICT IN WHICH PROJECT IS LOCATED

COUNTY MANAGER : JIM FREEMAN

UTILITIES DIRECTOR : MARJORIE CRAIG, P.E.

PROJECT MANAGER :

NAME
COMPANY NAME
XXX STREET NAME
CITY NAME, STATE NAME, ZIP
PHONE # (XXX) XXX- XXXX
FAX # (XXX) XXX- XXXX

ENGINEER OF RECORD:

CONSULTANT NAME
XXX STREET NAME
CITY NAME, STATE NAME, ZIP
PHONE # (XXX) XXX- XXXX
FAX # (XXX) XXX- XXXX

CALL 48 HOURS BEFORE YOU DIG

IT'S THE LAW! DIAL 811

811 Know what's **below.** **Call** before you dig.

SUNSHINE STATE ONE CALL OF FLORIDA, INC.

☐ CONSTRUCTION DRAWING
☐ RECORD DRAWING

ENGINEER _____
print name
LICENSE # _____

ENGINEER _____
signature
DATE _____

PROJECT NAME
PROJECT NAME

XXXXX STREET NAME, CITY

PCU PROJECT # XXXX.XXX.XX.XX

PROJECT NAME
PROJECT NAME

RANGE XX, TOWNSHIP XX, SECTION XX
(ADDRESS, IF APPLICABLE)
PARCEL ID # XXXXXX XXXXXX XXXXXX
PCU PROJECT # XXXX.XXX.XX.XX

POLK COUNTY

DRAWING INDEX

(SHEET NOS. 01 TO XX, NOT AS C-1 TO X-XX)

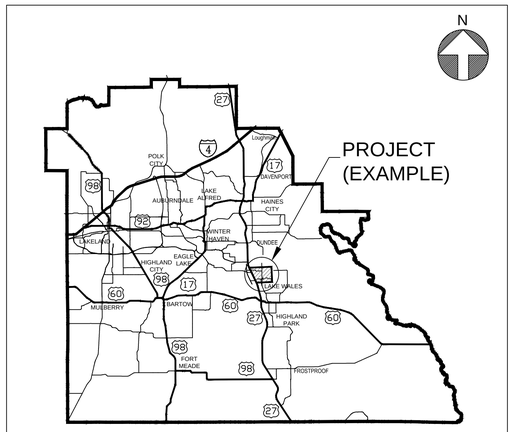

POLK COUNTY, FLORIDA
LOCATION MAP

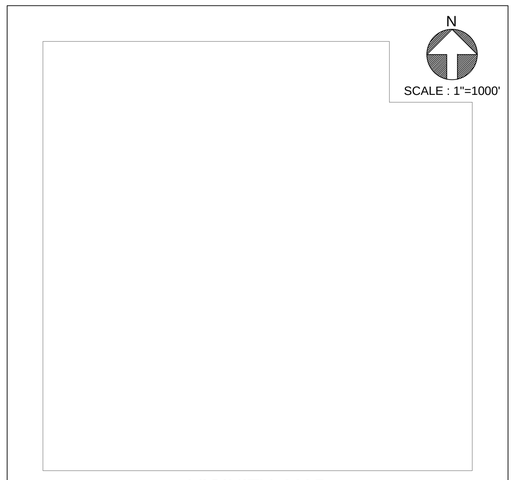

VICINITY MAP

UTILITIES PROVIDERS LIST

1 CONTACT NAME
COMPANY NAME
XXX STREET NAME
CITY NAME, STATE NAME, ZIP
(XXX) XXX- XXXX

2 CONTACT NAME
COMPANY NAME
XXX STREET NAME
CITY NAME, STATE NAME, ZIP
(XXX) XXX- XXXX

3 CONTACT NAME
COMPANY NAME
XXX STREET NAME
CITY NAME, STATE NAME, ZIP
(XXX) XXX- XXXX

4 CONTACT NAME
COMPANY NAME
XXX STREET NAME
CITY NAME, STATE NAME, ZIP
(XXX) XXX- XXXX

5 CONTACT NAME
COMPANY NAME
XXX STREET NAME
CITY NAME, STATE NAME, ZIP
(XXX) XXX- XXXX

DEVELOPER / OWNER :

NAME
COMPANY NAME
XXX STREET NAME
CITY NAME, STATE NAME, ZIP
PHONE # (XXX) XXX- XXXX
FAX # (XXX) XXX- XXXX

ENGINEER OF RECORD:

CONSULTANT NAME
XXX STREET NAME
CITY NAME, STATE NAME, ZIP
PHONE # (XXX) XXX- XXXX
FAX # (XXX) XXX- XXXX

CALL 48 HOURS
BEFORE YOU DIG

IT'S THE LAW!
DIAL 811

811
Know what's **below.**
Call before you dig.

SUNSHINE STATE ONE CALL OF FLORIDA, INC.

☐ CONSTRUCTION DRAWING
☐ RECORD DRAWING

ENGINEER _____
PRINT NAME
LICENSE # _____

ENGINEER _____
SIGNATURE
DATE _____

PROJECT NAME
PROJECT NAME

PCU PROJECT # XXXX.XXX.XX.XX XXXXX STREET NAME, CITY / PARCEL ID # XXXXXX XXXXXX XXXXXX

(SAMPLE OF RECOMMENDED FORMAT)

FIGURE DC-01 DEVELOPMENT TITLE SHEET

CHAPTER 3 GENERAL REQUIREMENTS

Section 310 General Standards and Specifications December 2010

PART 1 - GENERAL STANDARDS

A. This Section specifies the general design standards the DEVELOPER and ENGINEER shall comply with regarding any proposed project.

B. Design and Plan Review:

The design of potable water, wastewater and reclaimed water improvements shall be in compliance with this MANUAL. PLANS will be reviewed and approved by PCU as part of the subdivision or commercial site plan review process as specified by the LAND DEVELOPMENT CODE.

C. Compliance with Other Regulatory Requirements:

It shall be the responsibility of the DEVELOPER to obtain and comply with all applicable federal, state, and local regulatory permits.

D. The DEVELOPER shall be financially responsible for any designs that require modification to or may adversely affect any portion of PCU's potable water, wastewater, and reclaimed water infrastructure.

PART 2 - GENERAL SPECIFICATIONS

2.01 GENERAL

A. This Section specifies the general conditions the CONTRACTOR shall comply with regarding the construction site.

B. Where PCU funds are being utilized, the CONTRACTOR shall have the project's limits of construction professionally color videoed using a DVD recording format prior to the start of any construction activities and immediately upon completion.

C. All materials and products utilized as part of the approved WORK for all proposed water, wastewater, and reclaimed water improvements shall be in accordance with the "Approved Meters List", the "Approved Cross Connection Control Assemblies List", and the applicable "Approved Materials Checklist".

2.02 GRADES, SURVEY LINES, AND PROTECTION OF MONUMENTS

A. Grade:

1. All WORK shall be constructed in accordance with the lines and grades shown on the PLANS. The full responsibility for keeping alignment and grade shall rest upon the CONTRACTOR.
2. Benchmarks and base line controlling points shall be established prior to beginning work. Reference marks for lines and grades as the work progresses will be located to cause as little inconvenience to the prosecution of the WORK as possible. The CONTRACTOR shall also place excavation and other materials as to cause no

inconvenience in the use of the reference marks provided. CONTRACTOR shall remove any obstructions placed contrary to this provision.

B. Surveys:

1. The CONTRACTOR shall furnish and maintain stakes and other such materials, and give such assistance, including qualified helpers, for setting reference marks to the satisfaction of PCU and the ENGINEER.
2. The CONTRACTOR shall check such reference marks by such means as he may deem necessary and, before using this, shall call PCU's attention to any inaccuracies.
3. The CONTRACTOR shall, at his own expense, establish all working or construction lines and grades as required from the reference marks, and shall be solely responsible for the accuracy thereof.

C. Monument Preservation:

Property corners and survey monuments shall be preserved using care not to disturb or destroy them. If a property corner or survey monument is disturbed or destroyed during construction, whether by accident, careless work, or required to be disturbed or destroyed by the construction WORK, said property corner or survey monument shall be restored by a SURVEYOR. All costs for this work shall be paid for by the CONTRACTOR.

2.03 UTILITY COORDINATION

A. Location of Utilities:

The CONTRACTOR shall ensure that all existing utilities in the areas of WORK are located in accordance with Sunshine State One Call regulations, Florida Statutes Chapter 556, "Underground Facility Damage Prevention and Safety Act". The CONTRACTOR is responsible for subsurface verification of all existing utilities prior to construction. The CONTRACTOR shall utilize due care at all times when performing excavations as utility locates are not exact in nature.

1. The CONTRACTOR shall comply with Chapter 556, F.S., "Underground Facility Damage Prevention and Safety Act", Chapter 553, F.S., "Florida Trench Safety Act, Part IV", Chapter 368, F.S., "Florida Gas Safety Law, Part 1", and OSHA Standard 1926.651.
2. The CONTRACTOR shall take all reasonable precautions against damage to existing utilities. However, in the event of damage to an existing utility, the CONTRACTOR shall immediately notify the responsible official of the organization operating the interrupted utility. The CONTRACTOR shall lend all possible assistance in restoring services and shall assume all cost, charges, or claims connected with the interruption and repair of such services, as determined by Florida Statutes.
3. PCU may elect to facilitate the repair to its facilities with PCU forces. The

CONTRACTOR shall reimburse PCU for all repair costs should the CONTRACTOR not act in a timely manner or is found to be neglible.

4. The CONTRACTOR shall not operate PCU valves.

5. All information received by the ENGINEER and CONTRACTOR through the review of PCU record drawings and project files shall not be relied upon by the CONTRACTOR without field verification.

B. Deviations Occasioned by Structures or Utilities:

Wherever obstructions are encountered during the progress of the WORK and interfere to such an extent that an alteration in the PLANS is required, PCU shall have the authority to order a deviation from the line and grade or arrange with the OWNERs of the structures for the removal, relocation or reconstruction of the obstructions. Where gas, water, telephone, electrical, hot water, steam or other existing utilities are an impediment to the vertical or horizontal alignment of a proposed main, PCU shall have the authority to order a change in grade or alignment of the proposed main. PCU shall have the authority to direct the CONTRACTOR to coordinate with all utilities and other users of the right-of-way to facilitate appropriate conflict resolutions. If a change in line or grade of a wastewater gravity main is necessary, PCU may require the installation of additional manholes to maintain the integrity of the wastewater collection system.

C. Subsurface Exploration:

The CONTRACTOR shall make such subsurface explorations as necessary to perform the WORK utilizing pot-holing, ground penetrating radar, soft digging, etc.

D. Test Pits:

Test pits for the purpose of locating underground pipeline, utilities, or structures in advance of the construction shall be excavated and backfilled by the CONTRACTOR. Test pits shall be backfilled immediately after their purpose has been satisfied and maintained in a manner satisfactory to PCU. The costs for such test pits shall be borne by the CONTRACTOR.

2.04 MAINTENANCE OF TRAFFIC AND CLOSING OF STREETS

A. The requirements of the COUNTY, City, or FDOT, as appropriate, regarding maintenance of traffic and non-emergency road closures shall be adhered to in addition to the requirements as outlined below.

B. The CONTRACTOR shall carry on the WORK in a manner that will cause a minimum of interruption to traffic. Where traffic must cross open trenches, the CONTRACTOR shall provide suitable bridges at street intersections and driveways. The CONTRACTOR shall post suitable signs indicating that a street is closed with necessary detour signs for the proper maintenance of traffic. Prior to closing of any streets, the CONTRACTOR shall notify and obtain the approval of responsible authorities and PCU.

C. Unless permission to temporarily close a street is received in writing from the proper

authority (COUNTY, City, FDOT, etc.), all excavated material shall be placed so that vehicular and pedestrian traffic may be maintained at all times. If the CONTRACTOR's operations cause traffic hazards, he shall repair the road surface, provide temporary ways, erect wheel guards or fences, or take other measures for safety satisfactory to PCU.

D. Detours around construction will be subject to the approval of the authority having jurisdiction and PCU. Where detours are permitted, the CONTRACTOR shall provide all necessary barricades and signs as required to divert the flow of traffic. The CONTRACTOR shall expedite construction operations while traffic is detoured. Time periods when traffic is being detoured will be established by COUNTY, FDOT or prevailing authority.

2.05 PROTECTION OF PUBLIC AND PROPERTY

A. Barricades, Guards and Safety Provisions:

1. The CONTRACTOR shall be solely responsible for adhering to the rules and regulations of OSHA and appropriate authorities regarding safety provisions. To protect persons from injury and to avoid property damage, adequate barricades, construction signs, lights and guards as required shall be placed and maintained by the CONTRACTOR at his expense during the progress of the WORK and until it is safe for traffic to use the roads and streets. Material piles, equipment and pipe which may serve as obstructions to traffic shall be enclosed by fences or barricades and shall be protected by proper lights when the visibility is poor.

2. Signage and barricades shall be placed in accordance with the ENGINEER's Maintenance of Traffic Plan which shall comply with the provisions of Section 600 of the FDOT Design Manual, as a minimum.

3. During construction, pedestrian corridors shall be maintained in a safe, passable, and stabilized manner. Measures utilized shall include, but not be limited to, boardwalks or stabilized pathways. The CONTRACTOR shall be solely responsible for coordination with the School Board for potential construction impacts to schools and school crossings. Closure of any sidewalks and/or school crossings near schools shall require coordination with the School Board and written authorization from PCU if construction is conducted when schools are in session.

B. Protection of Utility Structures:

Temporary support, adequate protection and maintenance of all underground and surface utility structures including drains, sewers, manholes, hydrants, valves, valve covers, power poles and miscellaneous other utility structures encountered in the progress of the WORK shall be furnished by the CONTRACTOR at his expense. Any such structures that may have been disturbed shall be restored upon completion of the WORK. PCU's valves, hydrants, manholes, and other appurtenances shall be made accessible to PCU's personnel during all phases of construction.

C. Open Excavation:

All open excavations shall be adequately safeguarded by providing temporary barricades, caution signs, lights and other means to prevent accidents to persons and damage to property. The CONTRACTOR shall, at his own expense, provide suitable and safe bridges with handrails and other crossings for accommodating travel by pedestrians and workmen. Bridges provided for access to private property during construction shall be removed when no longer required. The length of open trench will be controlled by the particular surrounding conditions, but shall be limited to 300 linear feet unless otherwise approved by PCU. If the excavation becomes a hazard, or if it excessively restricts traffic at any point, PCU may require special construction procedures such as limiting the length of open trench, fencing, prohibiting excavated material in the street and requiring that the trench shall not remain open overnight. The CONTRACTOR shall take precautions to prevent injury to the public due to open trenches. All trenches excavated material, equipment or other obstacles that could be dangerous to the public shall be barricaded and well lighted at night. OSHA Regulations shall apply to all open excavations.

D. Protection of Trees and Shrubs:

The CONTRACTOR, at his expense, shall protect all trees and shrubs not shown to be removed on the PLANS, in accordance with COUNTY regulations. No excavated materials shall be placed so as to injure such trees or shrubs. Trees or shrubs destroyed by negligence of the CONTRACTOR or his employees shall be replaced in accordance with COUNTY regulations at the sole expense of the CONTRACTOR.

E. Protection of Lawn Areas:

Lawn areas shall be left in as good or better condition as before starting of the WORK. Where sod is to be removed it shall be carefully restored with new sod of the same type.

F. Restoration of Fences:

Any fence, or part thereof, that is damaged or removed during the course of the WORK shall be replaced or repaired by the CONTRACTOR and shall be left in as good a condition as before the starting of the WORK. The manner in which the fence is repaired or replaced and the materials used shall be subject to the approval of PCU.

G. Protection Against Siltation and Bank Erosion:

The CONTRACTOR shall follow federal, state and local permit requirements.

2.06 ACCESS TO PUBLIC SERVICES

A. Neither the materials excavated nor the materials or equipment used in the construction of the WORK shall be so placed as to prevent free access to public services. All excavated material shall be piled in a safe manner that will not endanger the WORK and that will avoid obstructing streets, sidewalks and driveways. Excavated material suitable for backfilling shall be stockpiled separately on the site. No material shall be placed closer than two feet from the edge of an excavation. Fire hydrants, valve pit covers, valve boxes, curb stop boxes or other utility controls shall be left unobstructed,

staked with silt fencing to properly identify, and remain accessible during construction. Gutters shall be kept clear or other satisfactory provisions made for street drainage. Natural watercourses shall not be obstructed or polluted. Surplus material and excavated material unsuitable for backfilling shall be transported and disposed of off the site in disposal areas obtained by the CONTRACTOR.

2.07 PUBLIC NUISANCE

A. The CONTRACTOR shall not create a public nuisance including, but not limited to, encroachment on adjacent lands, flooding of adjacent lands or excessive noise or dust. The CONTRACTOR shall eliminate noise to as great an extent as practicable at all times.

2.08 CONSTRUCTION HOURS

A. WORK shall be performed during NORMAL WORKING HOURS unless written authorization has been granted by PCU. The CONTRACTOR shall reimburse PCU for overtime pay resulting from inspection activities conducted after NORMAL WORKING HOURS. Prior to the start of any WORK, written notification shall be provided to PCU a minimum of two NORMAL WORKING DAYs.

2.09 CONSTRUCTION IN EASEMENTS AND RIGHTS-OF-WAY

A. Construction within Easements:

1. In easements across private property, the CONTRACTOR shall confine all operations within the easement area and shall be responsible and liable for all damage outside of the easement area. Trees, fences, shrubbery or other type of surface improvements located in easements will require protection during construction. Precautions shall be taken by adequate sheeting or other approved method to prevent any cave-in or subsidence beyond the easement limits or damage to improvements within the easement.

2. In general, the easement area is intended to provide reasonable access and working area for efficient operation by the CONTRACTOR. Where easement space for efficient operation is not provided, the CONTRACTOR shall be responsible for organizing his operations to perform within the restrictions shown on the PLANS.

B. Construction in FDOT Right-of-Way:

The CONTRACTOR shall strictly adhere to the requirements of the FDOT permit conditions where construction work is in a right-of-way under the jurisdiction of the State of Florida and shall take care to avoid any unreasonable traffic conflicts due to the WORK in road right-of-way.

C. Construction in COUNTY Right-of-Way:

WORK performed within a COUNTY maintained public right-of-way or easement shall be governed by the COUNTY UTILITY PERMIT.

2.10 SUSPENSION OF WORK DUE TO WEATHER

A. During inclement weather, all WORK shall be suspended which might be damaged or rendered inferior by such weather conditions. The WORK shall be suitably covered, protected and/or backfilled to protect the WORK and public from damage or injury.

2.11 USE OF CHEMICALS

A. Chemicals used during project construction or furnished for project operation, whether herbicide, pesticide, disinfectant, polymer, reactant or of other classification, must indicate approval of either United States Environmental Protection Agency, National Safety Foundation, or United States Department of Agriculture. Use of such chemicals and disposal of residues shall be in strict conformance with label instructions. Material Safety Data Sheets (MSDS) for chemicals used during project construction shall be submitted to PCU for approval and then located within the construction trailer or with the project superintendent throughout the construction period.

2.12 COOPERATION WITH OTHER CONTRACTORS AND FORCES

A. During construction progress, it may be necessary for other contractors and persons employed by PCU to work in or about the site. The CONTRACTOR shall not impede or interfere with the work of such other contractors and shall cooperate with the other contractor(s) for proper prosecution of the work.

2.13 CLEANING

A. During Construction:

During construction the CONTRACTOR shall, at all times, keep the construction site and adjacent premises as free from material, debris and rubbish as is practicable and shall remove the same from any portion of the site if, in the opinion of PCU, such material, debris, or rubbish constitutes a nuisance or is objectionable.

B. Final Cleaning:

At the conclusion of the WORK, all tools, temporary structures and materials belonging to the CONTRACTOR shall be promptly taken away. The CONTRACTOR shall remove and promptly dispose of all water, dirt, rubbish or any other foreign substances.

2.14 SALVAGE

A. Any existing PCU owned equipment or material which is removed or replaced as a result of construction, may be designated as salvage by PCU, and if so, shall be carefully excavated if necessary and delivered to PCU at a location designated by PCU.

CHAPTER 3 GENERAL REQUIREMENTS

Section 311 Site Preparations, Surface Removal, and Restoration Specifications December 2010

PART 1 – GENERAL

1.01 SCOPE OF WORK

A. This Section covers clearing, grubbing, and stripping of the construction sites. The CONTRACTOR shall clear and grub all of the area within the limits of construction as shown on the PLANS and approved by PCU prior to the beginning any WORK. All site WORK shall conform to the applicable COUNTY site clearing ordinance and landscaping and tree ordinances.

PART 2 - PRODUCTS (NOT USED)

PART 3 - EXECUTION

3.01 CLEARING AND GRUBBING

A. Clearing:

The surface of the ground for the area to be cleared and grubbed shall be completely cleared of all timber, brush, stumps, roots, grass, weeds, rubbish, and all other objectionable obstructions resting on or protruding through the surface of the ground. Clearing operations shall be conducted so as to prevent damage to existing structures and installations and to those under construction, and so as to provide for the safety of employees and others.

Trees and shrubs that are designated to remain shall be protected as specified in the Section entitled “General Standards and Specifications”.

B. Grubbing:

Grubbing shall consist of the complete removal of all stumps, roots larger than 1-1/2 inches in diameter, matted roots, brush, timber, logs and any other organic or metallic debris resting on, under, or protruding through the surface of the ground. Such deleterious materials shall be removed up to one foot below the bottom or the perimeter of any slab or structure. Water, wastewater, or reclaimed water mains shall not be installed within one foot of such deleterious materials. All depressions excavated below the original ground surface for or by the removal of such objects shall be refilled with suitable materials and compacted to a density conforming to the surrounding ground surface.

C. Disposal of Cleared and Grubbed Material:

The CONTRACTOR shall, at his expense, dispose of all material and debris from the clearing and grubbing operation in accordance with all STATE, COUNTY, and local regulations.

3.02 STRIPPING OF TOPSOIL WITHIN A COUNTY EASEMENT OR RIGHT-OF-WAY

A. In areas so designated, topsoil shall be stripped and stockpiled. Stockpiled topsoil shall

be protected until it is placed as specified. The CONTRACTOR, at the discretion of PCU, shall dispose of any remaining topsoil after all WORK is in place.

3.03 DUST CONTROL

A. The CONTRACTOR shall control dust resulting from clearing and grubbing operations to prevent nuisance to adjacent property owners and the general public. The CONTRACTOR shall use dust control methods and materials approved by PCU.

3.04 SURFACE REMOVAL

A. The CONTRACTOR shall remove the surface materials along the proposed pipe lines, as indicated on the PLANS, only to such widths as will permit a trench to be excavated which will afford sufficient room for efficient and proper construction. Pavement removal shall be saw cut with straight lines prior to excavation. All applicable COUNTY and FDOT regulations shall be followed. Where sidewalks, driveways, pavements and curb and gutter are encountered, care shall be taken to protect against fracture or disturbance beyond reasonable working limits. All fractured, broken or disturbed surfaces shall be restored to their original or better condition prior to completion of the WORK.

3.05 RESTORATION

A. Restoration of all surfaces including road subbase, soil cement, limerock base, asphaltic concrete surface, portland cement concrete pavement and driveways, sidewalks, concrete curbs, existing walls, fences, and irrigation systems shall be in strict accordance with applicable requirements of the LAND DEVELOPMENT CODE and STANDARD FDOT SPECIFICATIONS. In addition, the CONTRACTOR shall restore all storm drains, culverts, inlets and storm manholes to equal or better condition in accordance with applicable road construction specifications.

B. All sodding, landscaping, grassing, and mulching shall be done as specified in the LAND DEVELOPMENT CODE and STANDARD FDOT SPECIFICATIONS. Solid sodding shall be placed on all slopes steeper than four to one, within 10 feet of all proposed structures, the two (2) feet directly adjacent to the edge of pavement or back of curb along a roadway, and where existing sod is removed or disturbed by the WORK.

CHAPTER 3 GENERAL REQUIREMENTS

Section 312 Excavations, Backfill, Compaction, and Grading Specifications December 2010

PART 1 - GENERAL

1.01 SCOPE OF WORK

A. This Section covers excavation, backfill, fill, and grading associated with utility trench and structural construction. The CONTRACTOR shall furnish all labor, materials, equipment and incidentals necessary to perform all excavation, backfill, fill, compaction, grading and slope protection required to complete the WORK.

1.02 SOIL BORINGS AND SUBSURFACE INVESTIGATIONS

A. The CONTRACTOR shall examine the site and undertake subsurface investigations including soil borings, pot holing, and the use of ground penetrating radar before commencing the WORK. PCU will not be responsible for presumed or existing soil conditions in the WORK area.

1.03 EXISTING UTILITIES

A. The CONTRACTOR shall ensure that all existing utilities in the areas of WORK are located in accordance with Sunshine State One Call regulations, Florida Statutes Chapter 556, "Underground Facility Damage Prevention and Safety Act". The CONTRACTOR is responsible for subsurface verification of all existing utilities prior to construction. The CONTRACTOR shall utilize due care at all times when performing excavations as utility locates are not exact in nature.

B. If utilities are to remain in place, the CONTRACTOR shall provide adequate means of protection.

C. Should uncharted or incorrectly charted piping or other utilities be encountered during excavation, the CONTRACTOR shall be responsible for resolving the utility conflicts to PCU's satisfaction.

D. All costs for repairing damages to properly located PCU infrastructure or other utilities shall be the CONTRACTOR's responsibility in accordance with Florida Statutes Chapter 556, "Underground Facility Damage Prevention and Safety Act".

E. PCU shall not be responsible for uncharted or incorrectly charted water, wastewater, and reclaimed water mains or other utilities as RECORD DRAWINGS are not to be considered totally representative of subsurface conditions or existing infrastructure.

PART 2 - PRODUCTS

2.01 MATERIALS

A. General:

Materials for use as bedding and backfill, whether in-situ or borrow, shall be as described under this Section. The CONTRACTOR shall, upon request by PCU, make an appropriate sample of this material available for testing by PCU or its designated representative.

B. Structural Fill:

Materials for structural fill shall be bedding rock or select common fill as specified herein or other suitable material as approved by PCU.

C. Common Fill:

1. Common fill shall consist of mineral soil, substantially free of clay, organic material, muck, loam, wood, trash and other objectionable material which may be compressible or which cannot be compacted properly. Common fill shall not contain stones larger 3-1/2 inches in any dimension in the top 12 inches or six inches in any dimension in the balance of fill area. Common fill shall not contain asphalt, broken concrete, masonry, rubble or other similar materials. It shall have physical properties such that it can be readily spread and compacted during filling. Additional common fill shall be in accordance with FDOT specifications, unless finer material is approved for use in a specific location by PCU.

2. Material falling within the above specifications that is encountered during the excavation may be stored in segregated stockpiles for reuse. Material that is not suitable for backfill shall be disposed as unsuitable materials.

D. Select Common Fill:

Select common fill shall be in accordance with FDOT specifications.

E. Bedding Rock:

Bedding rock shall conform to FDOT No. 57 aggregate.

PART 3 - EXECUTION

3.01 DEWATERING, DRAINAGE, AND FLOTATION

A. General:

The CONTRACTOR shall excavate, construct and place all pipelines, concrete work, fill and bedding rock, in-the-dry. In addition, the CONTRACTOR shall not make the final 24 inches of excavation until the water level is a minimum of one foot below proposed bottom of excavation. For purposes of these specifications, "in-the-dry" is defined to be within two percent of the optimum moisture content of the soil. PCU reserves the right to ask the CONTRACTOR to demonstrate that the water level is a minimum of one foot below proposed bottom of excavation before allowing the construction to proceed.

1. Discharge water shall be clear, with no visible soil particles. Discharge from dewatering shall be disposed of in such a manner that it will not interfere with the normal drainage of the area in which the WORK is being performed, create a public nuisance or form ponding. The operation shall not cause damage to any portion of the WORK completed, in progress, to the surface of streets or to private property. The dewatering operation shall comply with the requirements of National Pollutant Discharge Elimination System (NPDES) and other state and COUNTY regulatory agencies. Additionally, the CONTRACTOR shall obtain proper right of entry where

private property will be involved.

2. Dewatering shall be conducted in such a manner as to preserve the natural undisturbed bearing capacity of the subgrade soils at proposed bottom of excavation.
3. The CONTRACTOR shall furnish all materials and equipment and perform all WORK required to install and maintain the drainage systems for handling groundwater and surface water encountered during construction of structures, pipelines and compacted fills.
4. During backfilling and construction, water levels may be required to be measured in observation wells if found necessary by PCU. Observation wells shall be located as directed by PCU.
5. Continuous pumping will be required as long as water levels are required to be below natural levels.

3.02 EXCAVATION

A. General:

Excavation consists of removal, storage and disposal of material encountered when establishing required grade elevations.

1. Authorized earth excavation includes removal and disposal of pavements and other obstructions visible on ground surface, underground structures and utilities indicated to be demolished and removed, and other materials encountered that are not classified as rock excavation or unauthorized excavation. Unauthorized excavation consists of removal of material beyond the limits needed to establish required grade and subgrade elevations without specific direction of PCU. Unauthorized excavation, as well as remedial work directed by PCU shall be at the CONTRACTOR's expense. Remedial work shall be performed as directed by PCU.
2. If the sub-grade is unsuitable, the CONTRACTOR shall remove and replace all unsuitable material below the pipe with selected common fill or bedding rock that shall be compacted to a minimum density of 100 percent of the maximum dry density as determined by AASHTO T-99.
3. If the CONTRACTOR excavates below grade, then the CONTRACTOR shall refill the excavation using select common fill or bedding rock.
4. Slope sides of excavations shall comply with local codes, ordinances, and with OSHA requirements. The CONTRACTOR shall shore and brace or use a trench box where sloping is not possible due to space restrictions or stability of the material excavated. Sides and slopes shall be maintained in a safe condition until completion of backfilling.
5. The CONTRACTOR shall stockpile satisfactory excavated materials at a location approved by PCU until required for backfill or fill.
6. Soil materials containing top soils and associated materials shall be located away from the edge of any excavations.
7. No excavated materials shall be placed within 2 feet of the edge of any excavations.

B. Excavations for Structures:

All such excavations shall conform to the elevations and dimensions shown on drawing within a tolerance of plus or minus 0.10 feet.

C. Trench Excavation:

Excavation for trenches required for the installation of utility pipes shall be made to the depths indicated on the approved PLANS to provide suitable room for laying the size and type of pipe specified.

1. Excavations shall not exceed normal trench width as specified in the STANDARD DRAWINGS. Any excavation that exceeds the normal trench width shall require special backfill requirements as determined by PCU.
2. Where the pipes are to be laid directly on the trench bottom, the lower part of the trenches shall not be excavated to grade in such a manner that will give a shaped bottom, true to grade, so that pipe can be evenly supported on undisturbed material, as specified in the STANDARD DRAWINGS. Bell holes shall be made as required.

3.03 SHORING

A. General:

Shoring, that meets OSHA standards, shall be utilized to prevent soil movement that could in any way diminish the width of the excavation. All adjacent structures, existing piping and/or foundation material shall be protected from disturbance, undermining, or other damage. Care shall be taken to prevent voids outside of the sheeting, but if voids are formed, they shall be immediately filled and rammed.

B. Miscellaneous Requirements:

Unless otherwise approved or indicated on the approved PLANS, all sheeting and bracing shall be removed after completion of the substructure. All voids left or caused by withdrawal of sheeting shall be immediately refilled with sand by ramming with tools specially adapted to that purpose, by watering or otherwise as may be directed.

3.04 BEDDING AND BACKFILL

A. General:

Material placed in fill areas under and around structures and pipelines shall be deposited within the lines and to the grades shown on the approved PLANS making due allowance for settlement of the material. Fill shall be placed only on properly prepared surfaces that have been inspected and approved by PCU.

1. Fill shall be brought up in uniform 6-inch compacted maximum level lifts starting with the deepest portion of the fill up to 12 inches above the top of pipe with the remaining fill to be placed in accordance with the requirements of the Agency having jurisdiction over the location at which the WORK is performed. As a minimum, the CONTRACTOR shall follow FDOT Standard Specifications for Roads and Bridge Construction Section 125 “Excavation for Structures and Pipe” (latest edition) when

working within COUNTY rights-of-way and easements.

2. Fill shall be placed and spread in layers by an approved method. Prior to the process of placing and spreading, all materials not meeting those specified under this Section, shall be removed from the fill areas.
3. Fill materials shall be placed and compacted "in-the-dry". The CONTRACTOR shall dewater excavated areas as required to perform the WORK and in such manner as to preserve the undisturbed state of the natural inorganic soils. Prior to filling, the ground surface shall be prepared by removing vegetation, debris, unsatisfactory soil materials, obstructions and deleterious materials. When existing ground surface has a density less than that specified under this Section for the particular area classification, the CONTRACTOR shall break up the ground surface, pulverize, moisture-condition to the optimum moisture content and compact to required depth and percentage of maximum density.
4. The CONTRACTOR shall moisture condition soils for proper compaction. Material that is too wet shall be replaced.
5. The entire surface of the WORK shall be maintained free from ruts and in such condition that construction equipment can readily travel over any section.

B. Bedding and Backfill for Structures:

Bedding rock shall be used for bedding under all structures, as indicated on the STANDARD DRAWINGS. The CONTRACTOR shall take all precautions necessary to maintain the bedding in a compacted state and to prevent washing, erosion or loosening of this bed. Select common fill shall be used as backfill against the exterior walls of the structures. Fill shall be compacted sufficiently in accordance with this Section.

1. Backfilling shall be carried up evenly on all walls of an individual structure. No backfill shall be allowed against walls until the walls and their supporting slabs, if applicable, have attained sufficient strength.
2. In locations where pipes pass through structure walls, the CONTRACTOR shall take precautions to consolidate the fill up to the spring line of all portions of the pipe that extend beyond the structure. Select common fill in such areas shall be placed in accordance with the requirements of the entity have jurisdiction over the location at which the WORK is being performed.
3. The surface of filled areas shall be graded to smooth true lines, strictly conforming to grades indicated on the approved PLANS. No soft spots or uncompacted areas will be allowed in the WORK.
4. Temporary bracing shall be provided as required during construction of all structures to protect partially completed structures against all construction loads, hydraulic pressure and earth pressure. The bracing shall be capable of resisting all loads applied to the walls as a result of backfilling.

C. Bedding and Backfill for Pipes:

Bedding for pipe shall be as shown on the approved PLANS. The CONTRACTOR shall

take all precautions necessary to maintain the bedding in a compacted state and to prevent washing, erosion or loosening of this bed.

1. Backfilling over and around pipes shall begin as soon as practicable after the pipe has been laid, jointed, and inspected. All backfilling shall be prosecuted expeditiously and as detailed on the STANDARD DRAWINGS.
2. Any space remaining between the pipe and sides of the trench shall be carefully backfilled, spread by hand, or approved mechanical device and thoroughly compacted evenly on both sides of the pipe with a tamper as fast as placed to a level of one foot above the top of the pipe in lifts with a minimum compacted thickness as specified by the entity having jurisdiction over the location at which the WORK is performed.
3. The remainder of the trench above the compacted backfill, as just described above, shall be filled and thoroughly compacted in accordance with the requirements of the entity having jurisdiction over the location at which the WORK is performed.
4. Compaction shall be in accordance with this Section and the STANDARD DRAWINGS.

D. Flowable Fill:

Where roadways and other improved sections are required to be open cut, the use of excavatable flowable fill may be required by PCU in lieu of soil backfill should time be of the essence. Accelerators and other additives shall be permitted as deemed necessary by the CONTRACTOR with the approval of PCU.

The flowable fill design mix shall be in accordance with FDOT specifications for excavatable flowable fill.

Should the entity having jurisdiction over the WORK require a different design mix than that specified in this MANUAL, the CONTRACTOR shall notify PCU of this requirement prior to its use.

3.05 COMPACTION

A. General:

The CONTRACTOR shall control soil compaction during construction to provide the percentage of maximum density specified. When utility work is conducted within FDOT, County, or municipal right-of-way, the more stringent minimum density standards shall apply.

B. Percentage of Maximum Density Requirements:

1) When a pipe or structure is placed under or within six feet of an improved or paved surface, fill or undisturbed soil from the bottom of the pipe trench to one foot above the pipe and then to the finished grade elevation shall be compacted to a minimum density of 100 percent of the maximum dry density as determined by AASHTO

T-99.

2) For areas not within six feet of an improved or paved surface, a minimum density of 95 percent of the maximum dry density based on AASHTO T-180 shall be obtained.

C. Compaction Tests:

One compaction test location shall be required for each 300 linear feet of pipe and for every l00 square feet of backfill around structures as a minimum. PCU may determine that more compaction tests are required to certify the installation depending on field conditions. The locations of compaction tests shall be in conformance with the following schedule.

1. One test at the spring line of the pipe.
2. At least one test for each 12-inch layer of backfill within the pipe bedding zone for pipes 24 inches and larger.
3. One test at an elevation of one foot above the top of the pipe.
4. One test for each two feet of backfill placed from one foot above the top of the pipe to finished grade elevation.
5. Tests shall be staggered around each manhole and lift station's wet well and valve vault within three feet of each structure's outside perimeter in accordance with the following schedule.
   i. First test shall be one foot above the structure base; and
   ii. Second test shall be two feet above first test
   iii. Subsequent tests shall be every two feet up to finished subgrade.
6. One test under the center of each lift station wet well base. Compaction shall have a minimum density of 100 percent of the maximum dry density as determined by AASHTO T-99.
7. The CONTRACTOR shall provide additional compaction and testing prior to commencing further construction if the ENGINEER's testing reports and inspection indicate that the fill that has been placed is below specified density.

3.06 GRADING

A. All areas within the limits of construction, including transition areas, shall be uniformly graded to produce a smooth uniform surface. Areas adjacent to structures or paved surfaces shall be graded to provide positive drainage away from structures and pavement. Ponding shall be prevented. After grading, the area shall be compacted to the specified depth and percentage of maximum density, and outlined in this Section.

B. No grading shall be done in areas where there are existing pipelines that may be uncovered or damaged until such lines have been relocated.

3.07 MAINTENANCE

C. The CONTRACTOR shall protect newly graded areas from traffic and erosion and

keep them free of trash and debris. The CONTRACTOR shall repair and reestablish grades in settled, eroded, and rutted areas.

3.08 INSPECTION AND QUALITY ASSURANCE

A. Inspection:

The CONTRACTOR shall examine the areas and conditions under which excavating, filling, and grading are to be performed and not proceed with the WORK until unsatisfactory conditions have been corrected.

1. The CONTRACTOR shall examine existing grade prior to commencement of WORK and report to PCU if elevations of existing grade vary from elevations shown on approved PLANS.

B. Quality Assurance:

All WORK shall be performed in compliance with applicable requirements of governing authorities having jurisdiction.

1. The CONTRACTOR, at his expense, shall engage soil testing and inspection services for quality control testing during earthwork operations.
2. Quality control testing shall be performed during construction to ensure compliance with these specifications. The CONTRACTOR shall assist the testing service as necessary. The CONTRACTOR shall allow the testing service to inspect and approve fill materials and fill layers before further construction is performed. The CONTRACTOR shall give copies of all test results in a report form to PCU to demonstrate compliance with compaction requirements stipulated in this Section.

CHAPTER 3 GENERAL REQUIREMENTS

Section 313 Installation of Pipe Specifications December 2010

PART 1 - GENERAL

1.01 SCOPE OF WORK

A. These specifications cover the pipe installation for potable water mains, wastewater force mains, reclaimed water mains and wastewater gravity mains.

B. The CONTRACTOR shall be responsible for all materials furnished and storage of same, until the date of project completion. The CONTRACTOR shall replace, at his expense, all materials found to be defective or damaged in handling or storage. The CONTRACTOR shall, if requested by PCU, furnish certificates, affidavits of compliance, test reports, samples or check analysis for any of the materials specified herein. All pipe delivered to project site for installation is subject to random testing for compliance with the designated specifications.

1.02 PIPE STORAGE AND HANDLING

A. Pipe shall be handled in such manner as will prevent damage to the pipe or coating. Accidental damage to pipe or coating shall be repaired to the satisfaction of PCU or be removed from the job. When not being handled, the pipe shall be supported on timber cradles or on properly prepared ground, graded to eliminate all rock points and to provide uniform support along the full length. When being transported, the pipe shall be supported at all times in a manner which will not permit distortion or damage to the lining or coating. Any unit of pipe that, in the opinion of PCU, is damaged beyond repair by the CONTRACTOR shall be removed from the site of the WORK and replaced with another unit.

B. When applicable, joint gaskets shall be stored in a clean, dark, and dry location until immediately before use.

PART 2 - PRODUCTS

2.01 PIPE MATERIALS AND APPURTENANCES

A. Potable Water Mains:

Refer to the Section entitled “Potable Water System Standards and Specifications”.

B. Raw Water Mains:

Refer to the Section entitled “Raw Water System Standards and Specifications”.

C. Gravity Wastewater Mains:

Refer to the Section entitled “Gravity Wastewater System Standards and Specifications”.

D. Wastewater Force Mains:

Refer to the Section entitled “Wastewater Pipes, Valves, and Appurtenances Specifications”.

E. Reclaimed Water Mains:

Refer to the Section entitled “Reclaimed Water System Standards and Specifications”.

PART 3 - EXECUTION

3.01 SURVEY LINE AND GRADE

A. Pressure Mains:

Pipe shall be laid to the lines and grades shown on the PLANS. The CONTRACTOR shall utilize line and grade stakes at intervals sufficient to insure that construction is accomplished at the designed line and grade, including all valve locations, jack and bores beginning and ending points, directional bore beginning and ending points, air release valves, and at all line and/or grade change locations. The CONTRACTOR shall provide temporary bench marks at a maximum of 1,000-foot intervals. The minimum pipe cover shall be 36 inches below the finished grade surface or 36 inches below the elevation of the edge of pavement of the road surface whichever is greater.

B. Gravity Mains:

The CONTRACTOR shall set temporary bench marks at sufficient intervals to insure that construction is accomplished at the designed line and grade. The CONTRACTOR shall constantly check line and grade of the pipe by laser beam method. In the event line and grade do not meet specified limits described hereinafter, the WORK shall be immediately stopped, PCU notified and the cause remedied before proceeding with the WORK.

3.02 PIPE PREPARATION AND HANDLING

A. All pipe and fittings shall be inspected prior to lowering into trench to insure no cracked, broken or otherwise defective materials are being used. All homing marks shall be checked for the proper length so as to not allow a separation of connected pipe greater than one inch. The CONTRACTOR shall clean ends of pipe thoroughly and remove foreign matter and dirt from inside of pipe and keep clean during and after installation.

B. Proper implements, tools and facilities shall be used for the safe and proper protection of the WORK. Pipe shall be lowered into the trench in such a manner as to avoid any physical damage to the pipe. Pipe shall not be dropped or dumped into trenches under any circumstances.

3.03 PIPE INSTALLATION

A. Trench Preparation and Pipe Bedding:

Refer to the Section entitled “Excavation, Backfill, Compaction, and Grading Specifications” and the STANDARD DRAWINGS.

B. Trench Dewatering and Drainage Control

Refer to the Section entitled “Excavation, Backfill, Compaction and Grading Specifications”. CONTRACTOR shall prevent water from entering trench during excavation and pipe-laying operations to the extent required to properly grade the bottom of the trench and allow for proper compaction of the backfill. Pipe shall not be

laid in water.

C. Pipe Laying in Trench:

Dirt or other foreign material shall be prevented from entering the pipe or pipe joint during handling or laying operations and any pipe or fitting that has been installed with dirt or foreign material in it shall be removed, cleaned and re-laid. At times when pipe is laying is not in progress; the open ends of the pipe shall be closed by a means approved by PCU to ensure cleanliness inside the pipe. The color stripe shall be viewed from the top when installed.

D. Locating Wire:

Locating wire, for electronically locating pipe after it is buried, shall be securely attached along the entire length of and installed with the pipe. This is applicable to all sizes and types of pressure mains. The locating wire shall be attached to the pipe with nylon wire tires or by other means approved by PCU, as shown in the STANDARD DRAWINGS. The wire itself shall be 14-gauge single strand solid core copper wire with non-metallic insulation, except that HDPE pipe installed by directional bore shall utilize two insulated 14 gauge locating wires or one single insulated 10 gauge wire specifically designed for directional bored installation. The insulation shall be color coded for the type of pipe being installed. Continuity must be maintained in the wire along the entire length of the pipe run. Permanent splices must be made in the length of the wire using waterproof wire connectors approved for underground applications as listed in the Florida Electrical Code. The wire shall extend to the surface and be connected to a test station box at valve locations, as shown in the STANDARD DRAWINGS.

E. Pipe Identification:

All pipes shall be identified in accordance with the STANDARD DRAWINGS.

F. PVC Pipe Installation:

PVC pipe shall be installed in accordance with standards set forth in the UNI-BELL "Handbook of PVC Pipe", AWWA C605, and AWWA Manual M-23. The pipe shall be laid by inserting the spigot end into the bell flush with the insertion line or as recommended by the manufacturer. At no time shall the bell end be allowed to go passed the "insertion line". A gap between the end of the spigot and the adjoining pipe is necessary to allow for expansion and contraction.

G. Ductile Iron Pipe Installation:

Ductile iron pipes shall be installed in accordance with AWWA C600 and AWWA Manual M-42.

H. HDPE pipe installation:

HPDE pipe installation shall follow the methods described in the most recent revision of the "Plastic Pipe Institute Handbook".

I. Installation of Pipes on Curves:

1. Long radius curves, either horizontal or vertical, may be installed with standard pipe by deflections at the joints. Maximum deflections at pipe joints, fittings and laying radius for the various pipe lengths shall not exceed the pipe manufacturer's recommendation.
2. No deflection or bending is allowed in PVC pipe. Alignment change shall be made only with fittings.

3.04 INSTALLATION OF APPURTENANCES:

A. Appurtenances:

Valves, fire hydrant assemblies, blow-off assemblies, line markers, and combination air and vacuum release valve assemblies are to be installed at the locations shown on the plans and as shown in the STANDARD DRAWINGS. Valves and fire hydrant assemblies shall be restrained to the pipeline they are connected to. In addition, the pipeline shall be restrained as required by the use of approved materials from manufacturers listed in the appropriate "Approved Materials Checklist". The distance of pipeline restraint shall not be less than shown in the STANDARD DRAWINGS.

B. Service Lines:

Service lines shall be installed to service intended properties as shown on the PLANS and in the manor as shown in the STANDARD DRAWINGS.

C. Valve Boxes:

Valve boxes in non-paved areas shall be installed with a valve collar as shown in the STANDARD DRAWINGS.

D. Fittings:

When fittings are required to be restrained along a pressure pipeline, both the pipe and fitting shall be restrained by the use of approved materials from manufacturers listed in the appropriate "Approved Materials Checklist". The distance of pipeline restraint shall be not less than as shown in the STANDARD DRAWINGS.

E. Pressure and Non-Pressure Connections:

Any connection to the existing piping system shall be scheduled in accordance with this MANUAL.

3.05 SUBAQUEOUS CROSSINGS

A. The preferred method of crossing bodies of waters is subaqueous means. PCU may approve other construction means or methods addressing special conditions.

B. A minimum cover of three feet shall be maintained over the pipe. HDPE, Fusible or restrained joint PVC, or restrained joint ductile iron pipe shall be used. Pipe joints shall not be located under the bottom of a swale or ditch. Where the swale or ditch bottom width requires the placement of a pipe joint under it, the carrier pipe shall be placed

with a steel casing in a manner that conforms to that used in jack and bore installations. Subaqueous pipe crossings of swales and ditches shall require a protective four inch thick reinforced concrete slab to be installed above the pipe but beneath the bottom of bottom of the swale or ditch as shown in the STANDARD DRAWINGS.

C. Valves shall be provided at both ends of the water crossings so that the section can be isolated for testing or repair. The valves shall be easily accessible and installed, as shown in the STANDARD DRAWINGS, at locations not subject to flooding.

D. Air release valves shall be installed as shown in the STANDARD DRAWINGS at the upstream high point prior to the subaqueous crossing. Valves shall be single body automatic air release valves designed to release large quantities of air at start up, admit air on shut down, and release air in operation. Automatic combination air and vacuum release valves shall be utilized to prevent both air locking and vacuum formation. Valves shall be made of either high strength plastic with corrosion resistant polymer materials or have a cast iron body, cover, and baffle, stainless steel float, bronze water diffuser Buna-N or Viton seat and stainless steel trim. Valves must be in stalled in an enclosure as shown on the STANDARD DRAWINGS. Fittings from the main to the valve in the enclosure shall be threaded and made of brass. The end of the air release valve discharge pipe shall be a minimum of 12 inches above finish grade and installed as shown on the STANDARD DRAWINGS.

E. It shall be the responsibility of the DEVELOPER to obtain all applicable regulatory permits, including dredge and fill permits to perform the WORK.

CHAPTER 3 GENERAL REQUIREMENTS

Section 314 Directional Drilling Standards and Specifications

December 2010

PART 1 - GENERAL

A. Horizontal directional drilling is a method of installation commonly referred to as directional drilling or guided horizontal boring.

PART 2 - UTILIZATION

A. Directional drilling shall be allowed for pressurized mains.

B. Directional drilling of force mains shall be restricted and require specific approval by PCU on a case by case basis.

C. If a minimum slope of 1.00 percent is maintained, directional drilling may be utilized for gravity main installation on a case by case basis as approved by PCU.

D. DI pipe shall only be utilized for water and reclaimed water mains.

E. Directional drilling of HDPE pipe and Fusible PVC shall be limited to wetlands, canal crossings, and perpendicular roadway crossings as approved by PCU.

F. Longitudinal alignment installations along roadways may be considered by PCU on a case by case basis as approved by PCU.

PART 3 - DESIGN

A. Horizontal alignment shall be as shown on the PLANS. The pipe shall have a minimum 36 inches of cover.

B. The maximum depth shall be as shallow as physically possible while complying with all regulatory and manufacturers requirements. In no case, shall the minimum clearance from existing or, under special circumstances, proposed utilities to be crossed be less than 18 inches.

C. Pipe diameter sizes for horizontal directional drill installations shall be in accordance with this MANUAL.

D. Using the PCU approved hydraulic modeling standards contained within this MANUAL, the ENGINEER shall determine on a case by case basis if it is necessary for all proposed HDPE pipe installations to be increased by one pipe size above all proposed or existing adjacent PVC and Ductile Iron Pipe installations.

E. For sub-aqueous crossings, a minimum cover of five feet shall be maintained over the pipe.

F. The use of separate couplings to join sections of HDPE pipe shall be restricted to non-paved areas and depths of less than 6 feet below finish grade.

G. Compound curvatures may be used, but shall not exceed the maximum deflections, as set forth by the pipe manufacturer or AWWA Standards, whichever is more stringent.

H. Entry angle shall not exceed 15 degrees. Exit angle shall not exceed 12 degrees to facilitate pullback.

I. A geotechnical subsurface report certified by an ENGINEER shall be provided to PCU, when required.

J. When HDPE and Fusible PVC pipe connects to either push-on joint DI or PVC pipes, the DI or PVC pipes shall be restrained on either side of the point of connection with the HDPE section of pipe as specified in the applicable Restrained Pipe Table in the STANDARD DRAWINGS.

PART 4 - INSTALLATION

4.01 SCOPE OF WORK

The WORK specified in this Section consists of furnishing and installing underground utilities using the horizontal directional drilling (HDD) method of installation, also commonly referred to as directional boring or guided horizontal boring. This WORK shall include all piping services, equipment, materials, and labor for the complete and proper installation, testing, restoration of underground utilities, and environmental protection and restoration.

4.02 QUALITY ASSURANCE

A. Qualifications:

1. Directional drilling CONTRACTOR (or SUBCONTRACTOR) shall have demonstrated experience constructing water, wastewater, or reclaimed water experience to include pipelines of the same or larger diameter and the same or greater lengths. All pipe and appurtenances of similar type and material shall be furnished by a single manufacturer.
2. The CONTRACTOR's operations shall be in conformance with the Directional Crossing Contractors Association (DCCA) published guidelines (latest edition) and pipe manufacturer's guidelines and recommendations.

B. Jurisdiction:

For crossings under roadways or other installations within rights-of-way and easements under the jurisdiction of the COUNTY or other entity, the CONTRACTOR shall comply with regulations of the agency with said authority. State highway casing installations shall conform to the FDOT, "Utility Accommodation Guide".

C. The CONTRACTOR shall verify existing utility location prior to constructing drilling and receiving pits.

D. Subaqueous crossings shall also adhere to the requirements of the Section entitled "Installation of Pipe Specifications".

E. Locating wire shall be installed along the length of all directional drill mains. Two insulated 14 gauge locating wires or one single insulated 10 gauge wire specifically designed for locating directional bored mains shall be utilized. The insulation of the wire shall be color coded for the type of pipe being installed. Continuous continuity must be maintained in the wire along the entire length of the pipe run. Permanent

splices must be made in the length of the wire using waterproof wire connectors approved for underground applications as listed in the Florida Electrical Code. The wire shall extend to the surface and be connected to a test station box at valve locations, as shown in the STANDARD DRAWINGS.

PART 5 - PRODUCTS

5.01 GENERAL

A. The directional drilling equipment shall consist of the following:

a. A directional drilling rig of sufficient capacity to perform the bore and pull-back the pipe;

b. A drilling fluid mixing, delivery and recovery system of sufficient capacity to complete the crossing;

c. A drilling fluid recycling system to remove solids from the drilling fluid so that the fluid can be reused;

d. A magnetic guidance system to accurately guide boring operations,

e. A vacuum truck of sufficient capacity to handle the drilling fluid volume, if required; and

f. Trained and competent personnel to operate the system.

B. All equipment shall be in good, safe operating condition with sufficient supplies, materials and spare parts on hand to maintain the system in proper working order.

5.02 DRILLING SYSTEM

A. The directional drilling machine shall consist of a hydraulically powered system to rotate, push and pull hollow drill pipe into the ground at a variable angle while delivering a pressurized fluid mixture to a guidable drill (bore) head. The machine shall be anchored to the ground to withstand the pulling, pushing and rotating pressure required to complete the crossing. The hydraulic power system shall be self-contained with sufficient pressure and volume to power drilling operations. Hydraulic system shall be free of leaks. Rig shall have a system to monitor and record maximum pullback pressure during pullback operations. The rig shall be grounded during drilling and pullback operations. There shall be a system to detect electrical current from the drilling string and an audible alarm that automatically sounds when an electrical current is detected.

5.03 PIPE

A. Pipe shall be restrained joint or fusible PVC pipe, HDPE pipe with ductile iron pipe outside diameters in accordance with AWWA C900, C905, or C906 respectively, or restrained joint DI pipe. The dimension ratio shall be verified by the CONTRACTOR based on the pipe, joint and material pull strength required for the directional drilling.

B. PVC Pipe

1. PVC restrained joint and Fusible PVC pipe shall have maximum dimension ratios equal to the following table.

Table 314-1. Maximum Dimension Ratios for PVC Pipe.

Type of Pipe System	Maximum Dimension Ratio
Wastewater	25 (4”-12”), 25 (16”+)
Reclaimed Water	18 (4”-12”), 25 (16”+)
Water	18 (4”-12”), 25 (16”+)

2. PVC pipe shall meet the requirements of AWWA C900 (C905 or C909). The pipe shall either be fused jointed or joined using separate couplings that have beveled edges, built-in sealing gaskets and restraining grooves or steel ring-and-pin gasketed joints. The restraining splines shall be square and made from Nylon 101. Pipe and couplings shall be Underwriters Laboratory and Factory Mutual approved.
3. Installation Curvature: The pipeline curvature shall not have a radius less than as shown in Table 314-2.

Table 314-2. PVC Pipe Deflection Information.

Pipe Diameter (inches)	Minimum Radius of Curvature (feet)	Offset per 20-ft Length (inches)	Deflection per 20-ft Length (degrees)
4	133	17.25	8.6
6	200	12.00	5.7
8	266	9.00	4.3
10	333	6.75	3.5
12	400	6.00	2.9
16	532	4.50	1.5

Note: Deflections for pipe diameters larger than 16” shall be in accordance with the pipe manufacturer’s recommendations.

C. HDPE Pipe

1. HDPE pipe and related fittings shall be made with prime virgin resins exhibiting a minimum cell classification as defined in ASTM D3350 and meeting the PE 3408/PE 4710 code designation with maximum dimension ratios equal to the following.

Table 314-3. Maximum Dimension Ratios for HDPE Pipe.

Type of Pipe System	Maximum Dimension Ratio
Wastewater	11
Reclaimed Water	11

Water	11

2. HDPE pipe 4-inch and larger nominal diameter shall be joined by means of zero leak-rate butt (thermal heat) fusion welds and/or approved flanged joints. Joints shall provide axial pullout resistance. Pipe shall meet the requirements of ANSI/AWWA C906, and have an outside diameter dimension of ductile iron pipe. Flanged joints shall not be used below finished grade for horizontal directional drilling applications. The use of separate couplings to join sections of HDPE pipe shall be restricted to non-paved areas and depths of less than 6 feet below finish grade.
3. HDPE pipe shall have been continuously marked by the manufacturer with permanent printing indicating at a minimum the following.
   a. Nominal size (inches);
   b. Dimension ratio (DR);
   c. Pressure rating (psi);
   d. Trade name;
   e. Material classification (PE 3408/ PE 4710);
   f. Plant, extruder and operator codes;
   g. Resin supplier code;
   h. Date produced; and
   i. HDPE pipe used for portable water mains shall bear the NSF Seal of Approval.
4. HDPE pipe shall be black in color with permanent colored stripes extruded into the pipe along its entire length, a single painted stripe along its entire length, or shall be one solid color, per the applicable service.

Table 314-4. Pipe Color.

Pipe Use	Color Coding
Potable Water	Blue
Wastewater	Green
Reclaimed Water	Purple

5. Installation Curvature:

   The pipeline curvature shall not have a radius less than as shown in Table 314-5.

Table 314-5. HDPE Pipe Deflection Information.

Pipe Diameter (inches)	Minimum Radius of Curvature (feet)	Offset per 20-ft Length (inches)
4	23	9.3

6	34	6.1
8	44	4.6
10	56	3.5
12	67	3.0
16	88	2.3

Note: Deflections for pipe diameters larger than 16" shall be in accordance with the pipe manufacturer's recommendations.

D. Ductile Iron Pipe

1. DI restrained joint pipe shall be Class 350, have appropriate joints specified for directional drill applications, and be in accordance with the recommendations set forth in American Cast Iron Pipe Company's "Guidelines for use Ductile Iron Pipe for Horizontal Directional Drilling applications".

5.04 DRILLING FLUIDS

A. Drilling fluids shall consist of a mixture of potable water and gel-forming colloidal material, such as bentonite or a polymer surfactant mixture producing slurry of custard-like consistency.

PART 6 - EXECUTION

6.01 PERSONNEL REQUIREMENTS

A. Responsible representatives of the CONTRACTOR and SUBCONTRACTOR(s) shall be present at all times during directional drilling operations. A responsible representative as specified herein is defined as a person experienced in the type of WORK being performed and who has the authority to represent the CONTRACTOR in a routine decision making capacity concerning the manner and method of carrying out the WORK.

B. The CONTRACTOR and SUBCONTRACTOR(s) shall have sufficient number of competent workers on the project at all times to ensure the utility placement is made in a timely, satisfactory manner. Adequate personnel for carrying out all phases of the directional drilling operation (where applicable: tunneling system operators, operator for removing spoil material, and laborers as necessary for various related tasks) must be on the job site at the beginning of WORK. A competent and experienced supervisor representing the CONTRACTOR or SUBCONTRACTOR that is thoroughly familiar with the equipment and type of WORK to be performed, must be in direct charge and control of the operation at all times. In all cases, the supervisor must be continually present at the project site during the directional drilling operation.

C. The equipment operator of the directional drilling machine shall provide written proof to PCU of sufficient training on and shall be certified to operate the machinery that is being used on the project.

D. Prior to beginning WORK and if required by PCU, the CONTRACTOR must submit a WORK plan to PCU detailing the procedure and schedule to be used to execute the project. The WORK plan should include the following.

a. A description of all equipment to be used;
b. Down-hole tools;
c. A list of personnel and their qualifications and experience;
d. List of SUBCONTRACTORs;
e. A schedule WORK activity;
f. A safety plan, traffic control plan (if applicable);
g. An environmental protection plan and;
h. Contingency PLANS for possible problems.

E. WORK plan must be comprehensive, realistic, and based on actual working conditions for this particular project. Plan must document the requirements to complete the project

F. Equipment:

1. If required by PCU, the CONTRACTOR will submit specifications on directional drilling equipment to be used to ensure that the equipment will be adequate to complete the project. Equipment shall include but not be limited to the following.
   a. Drilling rig;
   b. Mud system;
   c. Mud motors (if applicable);
   d. Down-hole tools;
   e. Guidance system and;
   f. Rig safety systems.
2. If required by PCU, calibration records for guidance equipment shall be included. Specifications for any drilling fluid additives that the CONTRACTOR intends to use or might use shall be submitted.

6.02 COORDINATION OF THE WORK

A. The CONTRACTOR shall notify PCU at least three days in advance of starting WORK.

B. The CONTRACTOR and PCU shall select a mutually convenient time for the crossing operation to begin in order to avoid schedule conflicts.

C. The actual crossing operation shall not begin until PCU is present at the project site and agrees that proper preparations for the crossing have been made. PCU's approval

for beginning the crossing shall in no way relieve the CONTRACTOR from the ultimate responsibility for the completion of the WORK.

6.03 PROCEDURE

A. The installation of appropriate safety and warning devices in accordance with the "FDOT Manual on Traffic Control and Safe Practices" shall be completed prior to beginning WORK.

6.04 INSTALLATION

A. Erosion and sedimentation control measures and on-site containers shall be installed to prevent drilling mud from spilling out of entry and/or exit pits. Drilling mud will be disposed of off-site in accordance with local, state and federal requirements and/or permit conditions.

1. No other chemicals or polymer surfactant shall be used in the drilling fluid without written consent of PCU and after a determination is made that the chemicals to be added are not harmful or corrosive to the facility and are environmentally safe.

B. Pilot Hole:

Pilot hole shall be drilled on bore path with no deviations greater than two percent of depth over a length of 100 feet. In the event that pilot does deviate from bore path more than two percent of depth in 100 feet, the CONTRACTOR will notify ENGINEER. The ENGINEER may require the CONTRACTOR to pull-back and re-drill from the location along bore path before the deviation.

C. Reaming:

Upon successful completion of pilot hole, the CONTRACTOR will ream borehole to a minimum of 25 percent greater than outside diameter of pipe using the appropriate tools. CONTRACTOR will not attempt to ream at one time more than the drilling equipment and mud system are designed to safely handle.

D. Pullback:

After successfully reaming borehole to the required diameter, CONTRACTOR will put the pipe through the borehole. In front of the pipe will be a swivel and barrel reamer to compact bore hole walls. Once pullback operations have commenced, operations must continue without interruption until pipe is completely pulled into borehole. During pullback operations, the CONTRACTOR shall not apply more than the maximum safe pipe pull pressure at any time. A break away head rated at the maximum safe pull pressure shall be utilized.

E. The CONTRACTOR shall submit any proposed deviations from the design bore path with SHOP DRAWINGS.

F. The pipe entry area shall be graded to provide support for the pipe to allow free movement into the borehole. The pipe shall be guided in the borehole to avoid deformation of, or damage to, the pipe.

G. If unexpected subsurface conditions are encountered during the bore, the procedure shall be stopped. The installation shall not continue until PCU and ENGINEER have been consulted.

H. The pipe shall be pulled back through the borehole using the wet insertion construction technique.

I. The pipe shall be installed in a manner that does not cause upheaval, settlement, cracking, movement or distortion of surface features.

J. A continuous location log of all drilling activities shall be maintained by the equipment operator and produced for PCU review upon request. A legible copy of the log shall be provided to PCU upon completion of the directional drilling operation. Horizontal and vertical locations shall be noted every 25 feet.

K. When HDPE pipe is to be connected to PVC or DI Pipe, mechanical joint adapters shall be utilized.

L. When HDPE or Fusible PVC pipe connects to either push-on joint DI or PVC pipes, the DI or PVC pipes shall be restrained on either side of the HDPE section of pipe as specified under the heading entitled Point of Connection with HDPE Pipe in the applicable Restrained Pipe Table in the STANDARD DRAWINGS.

6.05 FIELD TESTING

A. PVC Pipe:

The CONTRACTOR shall perform hydrostatic testing for leakage following installation in accordance with the applicable testing and inspection sections of this MANUAL.

B. HDPE Pipe:

The CONTRACTOR shall perform hydrostatic testing for leakage following installation in accordance with the applicable testing and inspection sections of this MANUAL.

C. Ductile Iron Pipe

1. The CONTRACTOR shall test all installed DI pipe in accordance with AWWA C600. Pressure Testing:

The test pressure for installed pipes shall be 150 psi for water and reclaimed water and 150 psi for wastewater.

CHAPTER 3 GENERAL REQUIREMENTS

Section 315 Jack and Bore Standards and Specifications December 2010

PART 1 - GENERAL

A. Jack and boring is a method of pipe installation that includes the traditional jack and bore and micro tunneling processes.

PART 2 - UTILIZATION

A. Jack and bore shall be allowed for pressurized mains. The installation of gravity mains by the jack and bore method may be allowed by PCU on a case by case basis.

PART 3 - DESIGN

A. The casing shall have a minimum 36 inches of cover.

B. The maximum depth shall be as shallow as physically possible while complying with all regulatory and manufacturers requirements. In no case, shall the minimum clearance from existing or, under special circumstances, proposed utilities to be crossed be less than 18 inches.

C. A geotechnical subsurface report certified by an ENGINEER shall be provided to PCU if required.

PART 4 - MINIMUM CASING DIAMETER

A. The minimum casing diameter and wall thickness shall be in accordance with Table 315.1 below.

Table 315-1. Casing Pipe Minimal Nominal Diameter and Wall Thickness.

Carrier Pipe Nominal Diameter (in.)	Casing Outside Diameter (in.)	Casing Wall Thickness (in.)
4	12	.250"
6	16	.250"
8	18	.250"
10	20	.250"
12	24	.250"
16	30	.312"
20	36	.375"
24	42	.500"
30	48	.500"
36	54	.500"
42	60	.500"

PART 5 - CONSTRUCTION

5.01 SCOPE OF WORK

A. The installation of casing and carrier pipes by the method of boring and jacking shall be covered by these specifications. The overall scope of WORK shall include, but not be limited to, boring and jacking pits and equipment, sheeting, steel casing pipe, casing spacers, coatings, location signs as required, installing the carrier pipe, and miscellaneous appurtenances to complete the entire WORK as shown on the STANDARD DRAWINGS and restoration. Applicable provisions of this MANUAL shall apply concurrently. Boring and jacking operations shall be performed within the right-of-way and/or easements shown on the PLANS.

5.02 QUALITY ASSURANCE

A. Jurisdiction:

For crossings under roadways or other installations within rights-of-way and easements under the jurisdiction of the COUNTY or other entity, the CONTRACTOR shall comply with regulations of the agency with said authority. State highway casing installations shall conform to the FDOT "Utility Accommodation Guide".

B. The CONTRACTOR shall verify existing utility locations prior to constructing drilling and receiving pits.

C. Subaqueous jack and bore crossings shall also adhere to the requirements contained within the Section entitled "Installation of Pipe Specifications".

PART 6 - PRODUCTS

6.01 PIPE MATERIAL

A. Steel Casing:

Steel casings shall be new over the entire length and conform to the requirements of ASTM Designation A139 (straight seam pipe only) Grade "B" with minimum yield strength of 35,000 psi. The casing pipes shall have the minimum nominal diameter and wall thickness as shown in Table 315-1.

The sections of steel casing shall be shop and field welded in accordance with the applicable portions of AWWA C206 and American Welding Society (AWS) D7.0 for field welded pipe joints. Welds shall be complete penetration, single-bevel groove type joints. Welds shall be airtight and continuous over the entire circumference of the pipe and shall not increase the outside pipe diameter by more than 3/4-inch.

The CONTRACTOR shall wire brush the welded joints and paint with an approved material.

B. Carrier Pipe:

The carrier pipe shall be as specified in Chapters 4, 5, and 6 of this MANUAL, as applicable. Restrained joints shall be utilized on all PVC and DI pipe joints within the casing.

C. Carrier Pipe Spacers:

1. Stainless Steel Casing Spacers:

   Carrier pipes, inside of steel casing pipes, shall be supported by casing spacers at no more than 10 feet between spacers with no less than two casing spacers equally spaced along each section of carrier pipe. Each spacer shall be 8-inches wide for carrier pipes up to 12-inches in diameter and 12 inches wide for 16-inch to 30-inch in diameter carrier pipes. The spacer shall be manufactured of 14-gauge Type 304 stainless steel, as a minimum. All nuts and bolts shall be corrosion resistant and compatible with the respective steel band. Each spacer shall have a minimum of four runner supports manufactured of a high molecular weight polymer plastic. The runner supports shall be of adequate height to position the carrier pipe in the center of casing with a minimum top clearance of 1/2-inch. Between each spacer and runner, there shall be a stainless steel riser. All casing spacers larger than 36-inch diameter (carrier pipe) shall be factory designed, taking in consideration the weight of the carrier pipe filled with water. All calculations and drawings shall be submitted to PCU for review.

2. HDPE Casing Spacers:

   Casing spacers made of HDPE shall fasten tightly onto the carrier pipe so that the spacers do not move during installation. Casing spacers will be spaced no more than 6-1/2 feet apart with double spacers on each end of the casing. The casing spacers will provide a minimum safety factor of two to one to support the service load. Spacers shall have a minimum height that clears the pipe bell. Casing spacers shall be projection type totally non-metallic spacers constructed of preformed sections of high-density polyethylene.

D. Casing End Plugs:

After the carrier pipe has been tested, eight inch thick brick and mortar masonry casing end plugs shall be used to completely close both openings on either side of the casing in accordance with the STANDARD DRAWINGS. Plugs shall be suitable for restraining a saturated earth load at the casing's installed depth. A weep hole shall be installed near the bottom of each plug.

PART 7 - GENERAL

7.01 INSPECTION

A. Casing pipe to be installed may be inspected for compliance with this MANUAL by an independent laboratory selected and paid for by PCU. The manufacturer's cooperation shall be required in these inspections.

B. All casing pipe shall be subjected to a careful inspection prior to being installed. If

the pipe fails to meet the specifications it shall be removed and replaced with a satisfactory replacement at no additional expense to PCU.

7.02 PIPE HANDLING

A. Care shall be taken in loading, transporting, and unloading to prevent damage to the pipe or coatings. Pipe shall not be dropped. All pipes shall be examined before lying and no piece shall be installed which is found to be defective. Any damage to the pipe or coatings shall be repaired or replaced to the satisfaction of PCU.

7.03 INSTALLATION

A. WORK Coordination:

It shall be the CONTRACTOR's responsibility to perform the boring and jacking work in strict conformance with the requirements of the agency in whose right of way or easement the WORK is being performed. Any special requirements of the agency such as insurance, flagmen, etc., shall be strictly adhered to during the performance of WORK. The special requirements shall be performed by the CONTRACTOR at no additional cost to PCU.

B. Dewatering:

Dewatering through the casing during construction shall not be permitted. PCU shall approve all dewatering methods before construction work begins.

C. Carrier Pipe Support:

The carrier pipes shall be supported within the casing pipes so that the pipe bells do not rest directly on the casing. The load of the carrier pipes shall be distributed along the casing spacers. Casing spacers shall be as specified in the appropriate "Approved Materials Checklist".

D. Jacking Pits:

Excavation adjacent to the roads shall be performed in a manner to adequately support the roads. Bracing, shoring, sheeting or other supports shall be installed as needed. The CONTRACTOR shall install suitable reaction blocks for the jacks as required. Jacking operations shall be continuous and precautions shall be taken to avoid interruptions that might cause the casing to "freeze" in place. Upon completion of jacking operations, the reaction blocks, braces and all other associated construction materials shall be completely removed from the site. Appropriate barricades will be provided if pits are open overnight. Excavation shall be completely enclosed with barricades.

E. Maintaining Line and Grade:

Correct line and grade shall be maintained.

F. Removal of Excavated Material from Casing:

Earth within the casing shall not be removed too close to the cutting edge in order to prevent the formation of voids outside the casing. If voids are formed, they shall be satisfactorily filled with grout by pumping.

F. Cleaning of Casing Interior:

After completion of jacking, the CONTRACTOR shall clean the interior of the casing of all excess material.

CHAPTER 3 GENERAL REQUIREMENTS

Section 316 Aerial Crossings Standards and Specifications

December 2010

PART 1 – GENERAL

A. It shall be the responsibility of the DEVELOPER to obtain all applicable regulatory permits.

PART 2 - UTILIZATION

A. Aerial crossings shall be allowed for potable water mains and reclaimed water mains only with the specific approval of PCU.

PART 3 - PLACEMENT

A. Aerial crossings shall be located within dedicated public rights-of-way or Polk County Utilities Easements.

1. Public Rights-of-Way

   When installed in rights-of-way, aerial crossings shall maintain a consistent alignment with respect to the centerline of the road.

2. Polk County Utilities Easements

   If an aerial crossing is to be constructed within an easement, the centerline of the pipe shall be located along the centerline of the easement.

   a. When not adjacent to County or State rights of way, a minimum width of 20 feet for mains shall be provided.

   b. Where multiple parallel aerial crossings are to be placed within a single easement, the FDEP required horizontal separation distance between the mains shall be added to the above minimum single main easement width and rounded up to the nearest even foot.

   c. All locations and lengths of easements shall take in consideration the safety and accessibility of PCU vehicles and personnel.

PART 4 - DESIGN

A. All above ground portions of aerial crossings shall be flanged pipe.

B. Flexible joints shall be provided between the aerial and buried sections of the pipe. Flexible joints shall be designed by the ENGINEER to address expansion and contraction of the pipe. Calculations and design data are to be submitted by the ENGINEER for approval.

C. Pipe joints shall be restrained or flanged ductile iron.

D. Aerial crossings shall be designed with uniform positive or negative slopes to avoid undulations and minimize high points and low points in the profile.

E. Aerial crossings shall be supported on concrete pilings.

F. Adequate support shall be provided for all joints in pipes utilized for aerial crossings. A structural ENGINEER shall design the supports.

G. For aerial stream crossings, the impact of floodwaters and debris shall be considered. The bottom of the pipe shall be placed no lower than one foot above the top of the bridge opening or the 100-year floodplain mapped floodway elevation, whichever is higher.

H. Underground gate valves shall be provided at both ends of the aerial crossing so that the section can be isolated for testing or repair. The valves shall be restrained, easily accessible, and not subject to flooding. An automatic combination air release/vacuum relief valve shall be installed at the high point of the aerial crossing.

I. Appropriate guards shall be installed at both ends of the aerial crossing to prevent public access to the pipe, as shown in the STANDARD DRAWINGS.

PART 5 - PRODUCTS

5.01 PIPE MATERIALS

A. Aerial crossing pipe material shall be ductile iron pipe with flanged joints and be in accordance with AWWA C115. Pipe sizes up from 3-inch to 20-inch shall be pressure class 350. Pipe sizes 24-inch to 64-inch shall be pressure class 250. Epoxy coated steel piping may be allowed on a case-by-case basis.

B. Other piping materials and appurtenances shall be as specified in Chapters 4, 5, and 6 of this MANUAL.

PART 6 - CONSTRUCTION

6.01 SCOPE OF WORK

A. The WORK specified in this Section consists of furnishing and installing pipe and appurtenances for aerial crossings. The WORK shall include all piping, materials, equipment, and labor for the complete and proper installation, testing, environmental protection, and restoration.

B. Aerial crossings shall be constructed in accordance with all permit requirements, the PLANS, the STANDARD DRAWINGS, and this MANUAL.

CHAPTER 3 GENERAL REQUIREMENTS

Section 317 System Connections Specifications December 2010

PART 1 - GENERAL

1.01 SCOPE OF WORK

A. Connections shall be made in accordance with this Section. Mains shall be tapped in such a manner as to avoid disturbance or disruption to the operation of the main in service and to protect the potable water supply from contamination. PCU shall operate all valves on existing mains.

PART 2 - PRODUCTS

2.01 TAPPING SLEEVES AND VALVES

A. General:

Tapping sleeves shall be mechanical joint sleeves. Refer to the appropriate "Approved Materials Checklist", for all sleeves, valves, and appurtenances.

B. Mechanical Joint Sleeves:

Sleeves shall be cast of gray-iron or ductile-iron and have an outlet flange with the dimensions of the Class 125 flanges shown in ANSI B16.1 and properly recessed for tapping valve. Glands shall be gray-iron or ductile iron. Gaskets shall be vulcanized natural or synthetic rubber. Bolts and nuts shall comply with ANSI/AWWA C111/ANSI A21.11. Sleeves shall be capable of withstanding a 200 psi working pressure.

C. Fabricated Mechanical Joint Tapping Sleeves:

Sleeves shall be of split mechanical joint design with separate end and side gaskets. Sleeves shall be fabricated of high strength steel, meeting ASTM A283 Grade C or ASTM A-36. Outlet flange shall meet AWWA C-207, Class "D" ANSI l50 pound drilling requirements and be properly recessed for the tapping valve. Bolts and nuts shall be high strength low alloy steel to AWWA C111 (ANSI A21.11). Gasket shall be vulcanized natural or synthetic rubber. Sleeve shall have manufacturer applied fusion bonded epoxy coating, minimum l2 mil thickness.

D. Tapping Valves:

Tapping valves shall meet the requirements of Chapters 4, 5, and 6 except that units shall be flanged mechanical joint ends. Valves shall be compatible with tapping sleeves as specified above and specifically designed for pressure connection operations.

PART 3 - EXECUTION

3.01 NOTIFICATION AND CONNECTION TO EXISTING MAINS

A. The CONTRACTOR shall make a formal request to PCU in accordance with its current policy to schedule a connection to any existing main. The request shall be made a minimum of five NORMAL WORKING DAYS prior to the proposed tie-in to the existing main. In this request, the CONTRACTOR shall provide the following information.

1. Points of connection, fittings to be used and method of flushing and disinfection if

applicable.

2. Estimated construction time for said connections.
3. Identify pressure and non-pressure connections

B. Connections shall only be made on the agreed upon date and time. If the CONTRACTOR does not perform the work in the agreed upon manner or schedule, the CONTRACTOR shall be required to reschedule the said connection by following the procedure outlined above.

C. Unless specifically approved in writing by PCU, connections shall only be attempted to an existing PCU main from Monday through Thursday. No connections shall be attempted on or the day before a COUNTY holiday.

3.02 INSTALLATION

A. General:

The CONTRACTOR shall furnish and install the tapping sleeves and valves to existing mains. Taps shall not be permitted for single user connections on transmission mains 30 inches or larger.

B. Excavation, Backfill, Compaction and Grading:

The applicable provisions of the Section entitled "Excavation, Backfill, Compaction, and Grading" shall apply.

C. Pressure Connections:

Sufficient length of main shall be exposed to allow for installation of the tapping sleeve and valve and the operation of the tapping machinery. The main shall be supported on concrete pedestals or bedding rock at sufficient intervals to properly carry its own weight, plus the weight of the tapping sleeve, valve and machinery. Any damage to the main due to improper or insufficient supports will be repaired at the CONTRACTOR's expense.

1. Prior to the tap, the CONTRACTOR shall assemble all materials, tools, equipment, labor, and supervision necessary to make the connection. The CONTRACTOR shall pre-position sufficient pipe sections, fittings, and equipment onsite that match the existing infrastructure being tapped.
2. The CONTRACTOR shall excavate a dry and safe working area pit of sufficient size to enable the necessary WORK.
3. The inside of the tapping sleeve and valve, the outside of the main and the tapping machine shall be cleaned and swabbed or sprayed with one percent liquid chlorine solution prior to beginning installation for water system pressure connections and must comply with AWWA C-651-99 or most current version.
4. After the tapping sleeve has been mounted on the main, the tapping valve shall be bolted to the outlet flange, making a pressure tight connection. Prior to beginning the tapping operation, the sleeve and valve shall be pressure tested under the observation of PCU personnel to 150 psi for a 30-minute duration to ensure that no leakage will

occur.

5. For pressure connections 4-inch through 20-inch installations, the minimum diameter cut shall be 1/2 inch less than the nominal diameter of the pipe to be attached. For larger taps, the allowable minimum diameter shall be two to three inches less than the nominal diameter of the pipe being attached. After the tapping procedure is complete, the CONTRACTOR shall submit the coupon to PCU.
6. The tapping valve shall be placed vertically for pressure connections to wastewater force mains.
7. Adequate restrained joint fittings shall be provided to prevent movement of the installation when test pressure is applied. Provisions in the "STANDARD DRAWINGS" shall apply.
8. The CONTRACTOR shall be responsible for properly backfilling the work area pit after the WORK is completed.

D. Non- Pressure Dry Connections:

When service must be interrupted to existing potable water customers during an addition of appurtenances the following shall apply.

1. The CONTRACTOR shall provide five NORMAL WORKING DAYS notice to PCU.
2. No customer shall be without service for more than six hours, unless specifically approved in advance by PCU. This accommodation to customers may include scheduling before and/or after NORMAL WORKING HOURS.
3. The CONTRACTOR shall be ready to proceed by pre-assembling as much material as possible at the site to minimize the length of service interruption.
4. Needed pipe restraints must be installed prior to the initiation of the shut-down of water.
5. The excavation shall be opened and needed site preparations shall be completed before the initiation of the connection WORK.
6. PCU shall postpone a service cut-off if the CONTRACTOR is not ready to proceed at the scheduled time.
7. Only PCU personnel shall operate the valves needed to perform the shut-down on the existing system.

CHAPTER 3 GENERAL REQUIREMENTS
Section 318 Field Testing and Inspection Procedures December 2010

PART 1 GENERAL

A. The CONTRACTOR shall schedule each required inspection from the PCU Inspector.

B. PCU will notify the CONTRACTOR of utilities deficiencies or acceptance in accordance with the schedule of notification provided in Table 318-1 below.

Table 318-1. PCU Schedule of Notification of Inspections

Service	Type of Inspection	Timeframe (NORMAL WORKING DAYs)
Water	Wire Continuity for Pressurized Mains	5
Water	Walk Through for Subdivisions	5
Water	Cross Connection Control	5
Wastewater	CCTV Data Review	7
Wastewater	Wire Continuity for Pressurized Mains	5
Wastewater	Walk Through for Subdivisions	5
Wastewater	Informal Lift Station Start Up	2
Wastewater	Formal Lift Station Start Up	5
Reclaimed Water	Wire Continuity for Pressurized Mains	5
Reclaimed Water	Walk Through for Subdivisions	5
Reclaimed Water	Cross Connection Control	5

C. If there are any deficiencies or the system is not ready for inspection, as determined by PCU, the CONTRACTOR shall request a re-inspection which will restart the inspection period, as noted above.

D. If more than two inspections are required, the CONTRACTOR shall be subject to being charged additional fees for re-inspection as specified by a separate Resolution adopted by the COUNTY.

CHAPTER 3 GENERAL REQUIREMENTS

Section 350 STANDARD DRAWINGS December 2010

GR-01 Bedding and Trenching - Type A
GR-02 Bedding and Trenching - Type B
GR-03 Subaqueous Crossing (Typical)
GR-04 Restrained Pipe Table
GR-05 Thrust Collar
GR-06 Bore and Jack
GR-07 Gate Valve and Box (Shallow)
GR-08 Butterfly Valve and Box (Shallow) (For Storage Tank Isolation Use Only)
GR-09 Plug Valve (Shallow) (For Wastewater Treatment Facility Use Only)
GR-10 Typical Valve Box Cover
GR-11 Valve Box Assembly (Deep)
GR-12 Valve Collar
GR-13 Pipe Line Marker (Typical)
GR-14-1 Pipe Tracer Wire
GR-14-2 Pipe Identification - Potable Water Mains
GR-14-3 Pipe Identification - Wastewater Force and Gravity Mains
GR-14-4 Pipe Identification - Reclaimed Water Mains
GR-14-5 Pipe Identification - Raw Water Mains
GR-15-1 Automatic Air Release Valve (Above Ground)
GR-15-2 Automatic Air Release Valve (In Ground)
GR-16 Minimum Separation Requirements
GR-17-1 Aerial Crossing and Access Barrier (Typical): Potable Water and Reclaimed Water Mains
GR-17-2 Sign for Aerial Crossing and Access Barrier: Potable Water and Reclaimed Water Mains
GR-18 Residential Service Locations (Typical)
GR-19-1 Single Family Residential Utility Plan (Typical): Potable Water
GR-19-2 Single Family Residential Utility Plan (Typical): Wastewater
GR-19-3 Single Family Residential Utility Plan (Typical): Reclaimed Water
GR-20-1 Potable Water and Reclaimed Water Services (Typical)
GR-20-2 Standard Rectangular Meter Box Assembly: Potable Water and Reclaimed Water
GR-21 MJ Tapping Sleeve and Gate Valve Assembly (Typical)
GR-22 General Notes
GR-23 THIS PAGE IS INTENTIONALLY BLANK
GR-24 Pig / Swab Launcher Port (Typical)
GR-25 Pig / Swab Receiving Port (Typical)
GR-26 Concrete Arch and Full Encasement
GR-27 Concrete Cradle and Half Encasement
GR-28 Deflection of Pressure Mains

POLK COUNTY UTILITIES, FLORIDA
UTILITIES INSPECTON REPORT

Project Name: _____ Report Number: _____

Utilities Inspector: _____ Inspection Date: _____

PCU Project Number: _____ Data Entry Date: _____

Contractor: _____ Time Arrived: _____ ☐ AM ☐ PM

Engineer: _____ Time Departed: _____ ☐ AM ☐ PM

1. General Observation

☐ Photos Taken ☐ Photos Not Taken

2. Observed Safety Issues (Copy to Risk Management)

☐ Trench Safety Deficiency ☐ Work Zone Safety Deficiency ☐ General Safety Deficiency ☐ MOT Deficiency ☐ Overhead Safety Deficiency

☐ Other

Issue(s)

☐ IMMEDIATE ATTENTION AND/OR CORRECTION REQUIRED BY: Date: _____ Time: _____ ☐ AM ☐ PM

3. Construction Work Underway

☐ **No Activity** ☐ **Gravity Sewer** ☐ **Force Main** ☐ **Lift Station** ☐ **Potable Water** ☐ **Reclaimed Water** ☐ **Raw Water**

4. Observed Construction/Installation Issues

☐ **Not in Accordance with Plans** ☐ **Improper Installation** ☐ **Work Being Completed Satisfactory**

☐ Other

Issue(s)

☐ IMMEDIATE ATTENTION AND/OR CORRECTION REQUIRED BY: Date: _____ Time: _____ ☐ AM ☐ PM

5. Weather

☐ Sunny ☐ Clear ☐ Cloudy ☐ Rainy

6. Temperature

☐ <32F ☐ 32F – 50F ☐ 51F – 70F ☐ 71F - 85F ☐ > 85F

7. Wind

☐ Still ☐ Windy

Signature: _____ Utilities Inspector: _____ Date: _____ Time: _____ ☐ AM ☐ PM

Signature: _____ Utilities Inspector: _____ Date: _____ Time: _____ ☐ AM ☐ PM

1. General Observation

☐ Project File ☐ Inspector ☐ Contractor ☐ Risk Management ☐ Project Manager

☐ Project Engineer ☐ TS Director ☐ CP Director ☐ Other _____

☐ Data Entered into EPD Database

☐ Signed Copy Sent to Project File

CHAPTER 3 GENERAL REQUIREMENTS

Section 350-B Utilities Inspector's Overtime Tracking Form December 2010

PCU Inspector: _____

Project Name: _____

PCU Project File Number: _____

Reason for Overtime Request: _____

_____

If Private Development Related Project:

Construction Company: _____

Superintendent/Foreman: _____ Phone Number: (_____)_____-_____

If County Community Improvement or R&R Project:

PCU: _____ Transportation: _____ Natural Resources: _____ Facilities: _____ Other: _____

Project Manager: _____ Phone Number: (_____)_____-_____

Overtime Start Time: _____ am / pm Overtime Start Time: _____ am / pm

Overtime End Date: _____/_____/_____ Overtime End Date: _____/_____/_____

Total Overtime Hours: _____ X (Inspector's Hourly Rate: $_____ X County Overhead Percentage: 0.33)

X Overtime Rate Multiplier: __ Regular 1.5 or __ Holiday 2.5 = Total Billable Overtime Amount: $_____

Inspector's Signature: _____ Date: _____ Supervisor's Signature: _____ Date: _____

_____ The Private Development Contractor acknowledges by his/her representative's signature below that PCU shall be reimbursed for all overtime costs necessitated by his company during the construction of the subject Project and that the company shall forward a check in the amount stated above within ten business days of its receipt of PCU's invoice.

_____ The CIP or R&R Contractor acknowledges by his/her representative's signature below that PCU shall be reimbursed for all overtime costs necessitated by his company during the construction of the subject CIP Project and that the company shall either:

____ forward a check in the amount stated above within ten (10) business days of its receipt of PCU's invoice **or**

____ deduct the amount stated above from the company's next pay request submittal.

Contractor's Representative's Signature: _____ **Date:** _____

Distribution: ____ Contractor ____ PCU Inspection Supervisor ____ Project Manager ____ Project File ____ PCU Finance

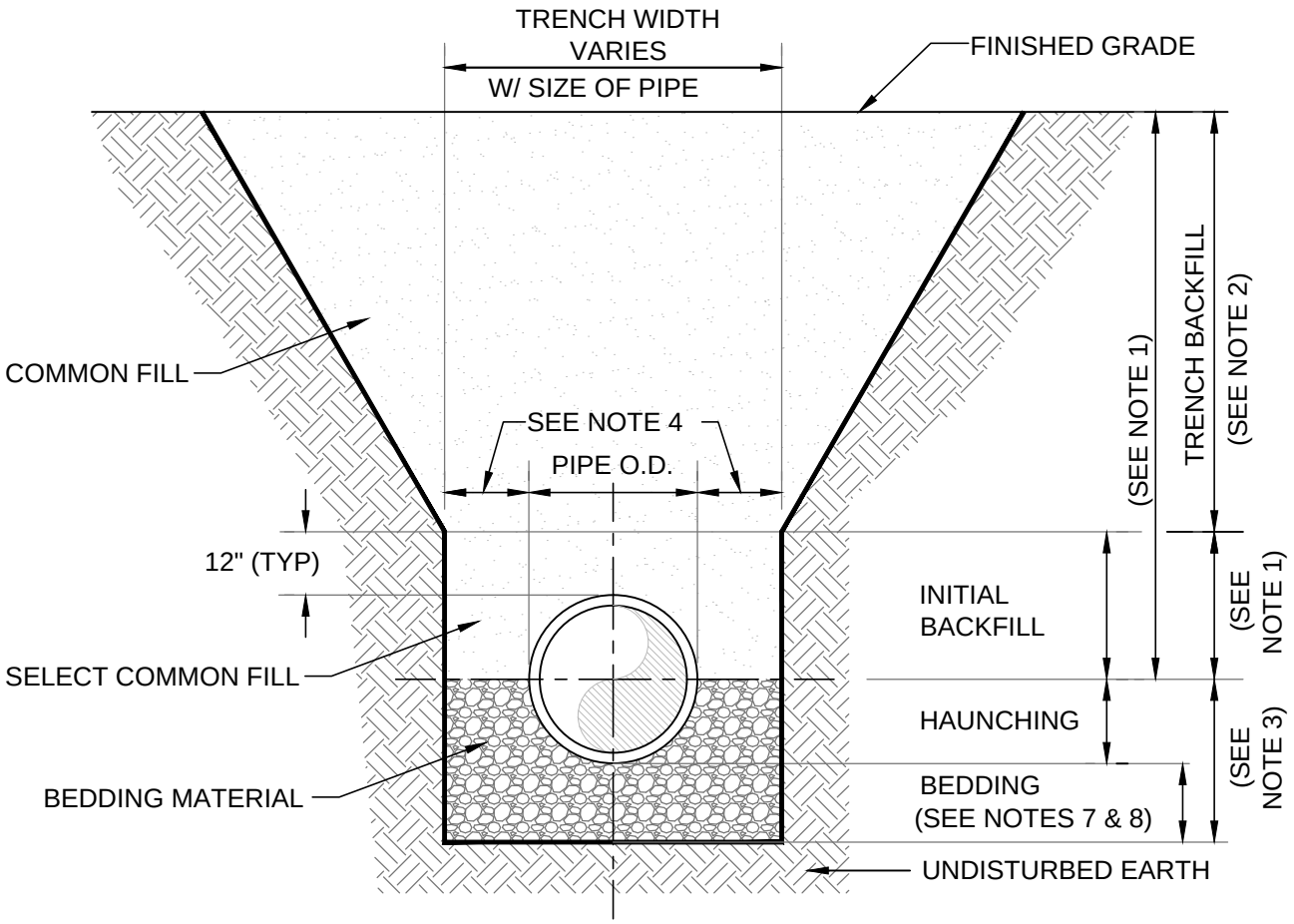

NOTES:

1. SELECT COMMON FILL UNDER & WITHIN 6 FEET OF THE EDGE OF ANY PAVED SURFACE SHALL BE PLACED IN 6" COMPACTED LIFTS TO TOP OF PIPE, THEN 12" COMPACTED LIFTS THEREAFTER, AND COMPACTED TO 100% OF MAX DENSITY PER AASHTO T-99. BACKFILL IN AREAS OUTSIDE THE ROADWAY SHALL BE PLACED IN 6" COMPACTED LIFTS TO TOP OF PIPE THEN 12" COMPACTED LIFTS THEREAFTER AND COMPACTED TO 95% MAX DENSITY PER AASHTO T-180.
2. TRENCH BACKFILL/BACKFILL COMPACTION SHALL BE IN ACCORDANCE WITH THE REGULATIONS OF THE GOVERNING AGENCY HAVING JURISDICTION OVER THE WORK SITE.
3. TYPE A BEDDING MATERIAL SHALL CONFORM TO FDOT NO. 57 AGGREGATE.
4. 15" MAX. (12" MIN.) FOR PIPE DIAMETER LESS THAN 24" AND 24" MAX (18" MIN) FOR PIPE DIAMETER 24" AND LARGER.
5. WATER SHALL NOT BE PERMITTED IN THE TRENCH DURING CONSTRUCTION.
6. ALL PIPE TO BE INSTALLED WITH BELL FACING UPSTREAM TO THE DIRECTION OF THE FLOW.
7. BEDDING DEPTH SHALL BE 4" MINIMUM FOR PIPE DIAMETER UP TO 12" AND 6" MINIMUM FOR PIPE DIAMETER 16" AND LARGER.
8. DEPTH FOR REMOVAL OF UNSUITABLE MATERIAL SHALL GOVERN DEPTH OF BEDDING ROCK BELOW THE PIPE. PCU SHALL DETERMINE IN THE FIELD REQUIRED REMOVAL OF UNSUITABLE MATERIAL TO REACH SUITABLE FOUNDATION.
9. FINAL RESTORATION IN IMPROVED AREAS SHALL BE IN COMPLIANCE WITH ALL APPLICABLE REGULATIONS OF THE GOVERNING AGENCY HAVING JURISDICTION OVER THE WORK SITE. SURFACE RESTORATION WITHIN COUNTY RIGHT-OF-WAY SHALL COMPLY WITH REQUIREMENTS OF POLK COUNTY.

BEDDING AND TRENCHING TYPE A	**FIGURE GR-01**
POLK COUNTY UTILITIES, FLORIDA	**DECEMBER, 2010**

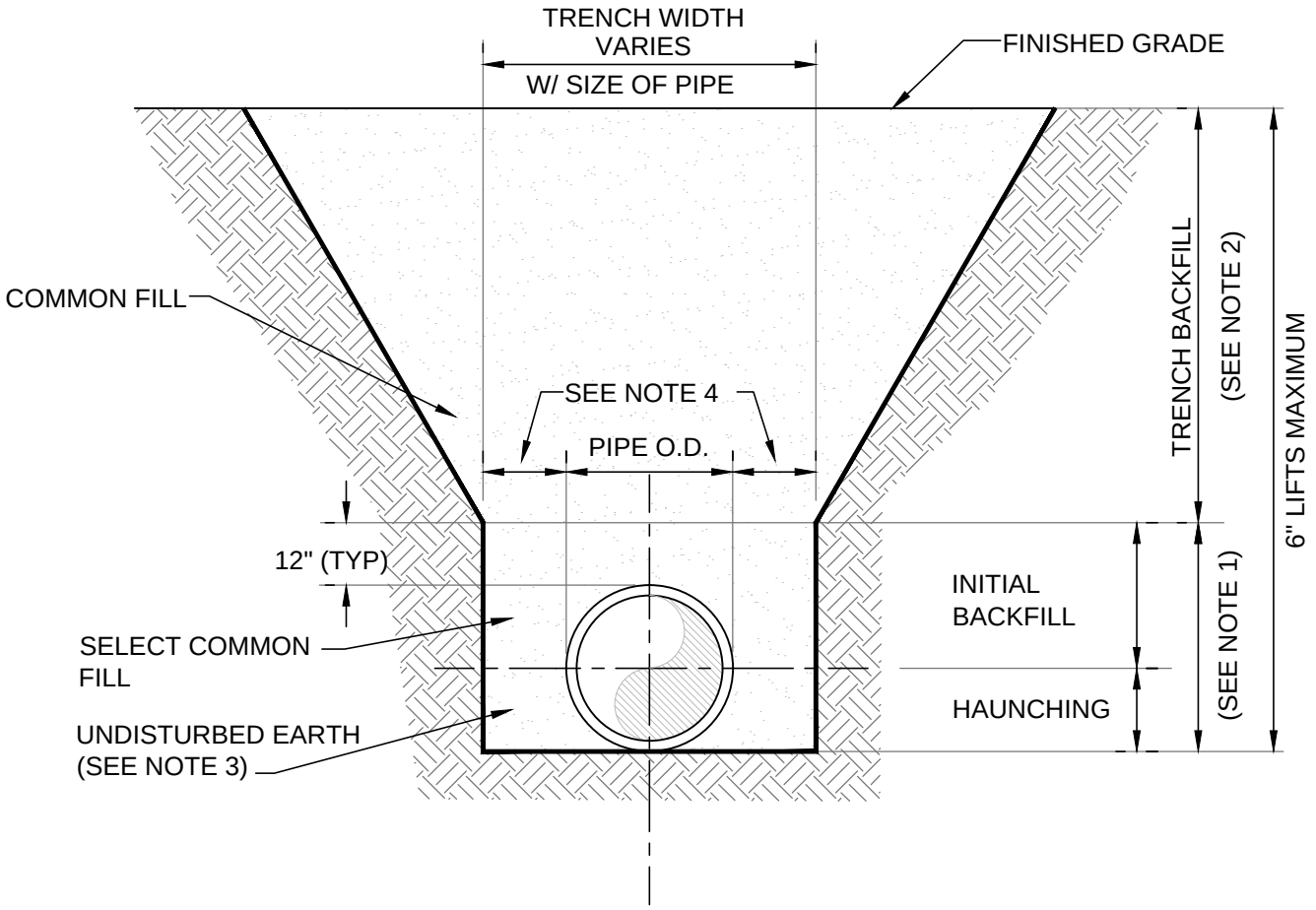

NOTES:

1. SELECT COMMON FILL UNDER & WITHIN 6 FEET OF THE EDGE OF ANY PAVED SURFACE SHALL BE PLACED IN 6" COMPACTED LIFTS TO TOP OF PIPE, THEN 12" COMPACTED LIFTS THEREAFTER, AND COMPACTED TO 100% OF MAX DENSITY PER AASHTO T-99. BACKFILL IN AREAS OUTSIDE THE ROADWAY SHALL BE PLACED IN 6" COMPACTED LIFTS TO TOP OF PIPE THEN 12" COMPACTED LIFTS THEREAFTER AND COMPACTED TO 95% MAX DENSITY PER AASHTO T-180.
2. TRENCH BACKFILL/BACKFILL COMPACTION: SHALL BE IN ACCORDANCE WITH THE REGULATIONS OF THE GOVERNING AGENCY HAVING JURISDICTION OVER THE WORK SITE.
3. PIPE BEDDING UTILIZING SELECT COMMON FILL OR BEDDING ROCK IN ACCORDANCE WITH TYPE A BEDDING AND TRENCHING DETAIL MAY BE REQUIRED AS DIRECTED BY PCU.
4. 15" MAX. (12" MIN.) FOR PIPE DIAMETER LESS THAN 24" AND 24" MAX (12" MIN) FOR PIPE DIAMETER 24" AND LARGER.
5. WATER SHALL NOT BE PERMITTED IN THE TRENCH DURING CONSTRUCTION.
6. ALL PIPE TO BE INSTALLED WITH BELL FACING UPSTREAM TO THE DIRECTION OF THE FLOW.
7. FINAL RESTORATION IN IMPROVED AREAS SHALL BE IN COMPLIANCE WITH ALL APPLICABLE REGULATIONS OF THE GOVERNING AGENCY HAVING JURISDICTION OVER THE WORK SITE. SURFACE RESTORATION WITHIN COUNTY RIGHT-OF-WAY SHALL COMPLY WITH REQUIREMENTS OF POLK COUNTY.

BEDDING AND TRENCHING TYPE B	**FIGURE GR-02**
POLK COUNTY UTILITIES, FLORIDA	**DECEMBER, 2010**

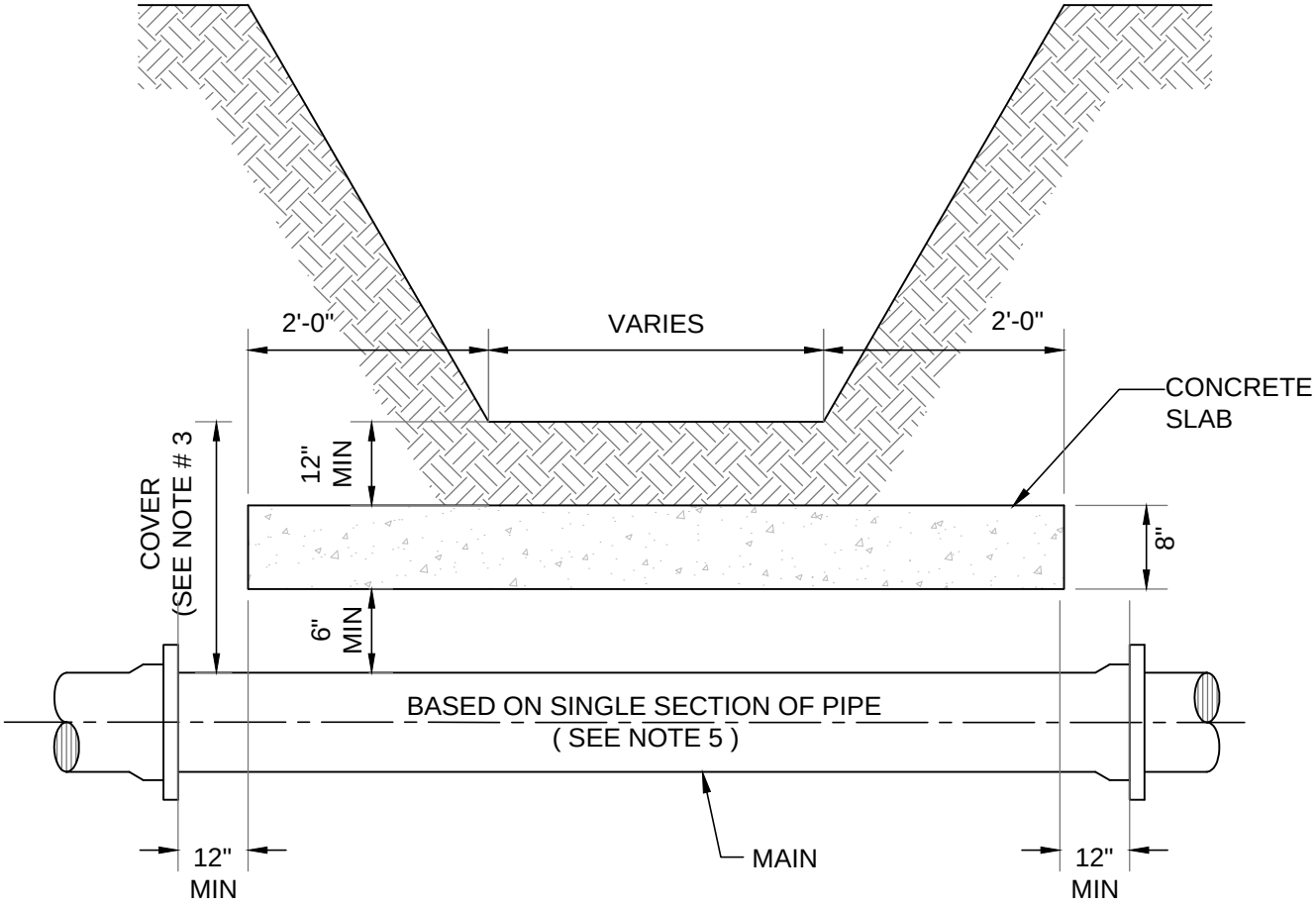

NOTES:

1. THE MAIN SHALL BE A CONTINUOUS LENGTH OF PIPE TO EXTEND 2 FEET MINIMUM EITHER SIDE OF THE CROSSING, WITH NO FITTING OR JOINTS WITHIN THE CROSSING.
2. CONCRETE SLAB SHALL BE 2' WIDER THAN THE PIPE O.D. WITH A MINIMUM WIDTH OF 4'.
3. CONCRETE IS NOT REQUIRED IF COVER IS GREATER THAN 3'.
4. CONCRETE SHALL BE 3000 PSI COMPRESSIVE STRENGTH WITH FIBERMESH REINFORCEMENT.
5. MAIN SHALL BE PLACED IN A STEEL CASING SHOULD BOTTOM OF DITCH OR SWALE EXCEED 12 FEET IN WIDTH. SEE FIGURE GR-06 FOR CASING DETAILS.

SUBAQUEOUS CROSSING (TYPICAL)	**FIGURE GR-03**
POLK COUNTY UTILITIES, FLORIDA	**DECEMBER, 2010**

MINIMUM LENGTH (FT) TO BE RESTRAINED ON EACH SIDE OF FITTING(S)												
TYPE	D.I.P. PIPE SIZE											
	4"	6"	8"	10"	12"	16"	20"	24"	30"	36"	42"	48"
90° BEND OR BRANCH OF TEE	20	29	37	44	51	65	77	89	105	120	132	144
45° BEND	8	12	15	18	21	27	32	37	44	50	55	60
22-1/2° BEND	4	6	7	9	10	13	15	18	21	24	27	29
11-1/4° BEND	2	3	4	5	6	7	8	9	10	12	13	15
PLUG OR CAP	42	59	77	93	108	138	166	194	231	275	328	391
POINT OF CONNECTION WITH HDPE PIPE	40	40	40	40	40	40	40	40	60	60	60	60

MINIMUM LENGTH (FT) TO BE RESTRAINED ON EACH SIDE OF FITTING(S)												
TYPE	PVC OR HDPE PIPE SIZE											
	4"	6"	8"	10"	12"	16"	20"	24"	30"	36"	42"	48"
90° BEND OR BRANCH OF TEE	25	37	47	55	64	82	97	112	132	156	172	188
45° BEND	10	15	19	23	27	34	40	47	55	65	72	78
22-1/2° BEND	5	8	9	12	13	17	19	23	27	32	35	38
11-1/4° BEND	3	4	5	7	8	9	10	12	13	16	17	19
PLUG OR CAP	53	74	97	117	135	173	208	243	289	344	410	488
POINT OF CONNECTION WITH HDPE PIPE	40	40	40	40	40	40	40	60	60	80	80	80

NOTES:

1. FITTINGS SHALL BE RESTRAINED JOINTS UNLESS OTHERWISE INDICATED.
2. INSTALL FULL LENGTH JOINTS WITH TOTAL LENGTH EQUAL TO OR GREATER THAN SHOWN IN THE TABLE.
3. WHERE TWO OR MORE FITTINGS ARE TOGETHER, USE FITTING WHICH YIELDS GREATEST LENGTH OF RESTRAINED PIPE.
4. ALL LINE VALVES AND THROUGH RUN OF TEES SHALL HAVE MJ RESTRAINTS.
5. LENGTHS SHOWN IN THE TABLE HAVE BEEN CALCULATED IN ACCORDANCE WITH THE PROCEDURE OUTLINED IN "THRUST RESTRAINT DESIGN FOR DUCTILE IRON PIPE" AS PUBLISHED BY DIPRA, WITH THE FOLLOWING ASSUMPTIONS:
   WORKING PRESSURE: 150 PSI
   SOIL DESIGNATION: SM (SAND SILT)
   LAYING CONDITIONS: 3
6. THE ENGINEER SHALL VERIFY THESE MINIMUM DESIGN ASSUMPTIONS AND INCREASE LENGTHS WITH THE APPROVAL OF PCU.
7. DI PIPE WRAPPED WITH OR ENCASED IN POLYETHYLENE SHALL BE RESTRAINED SIMILAR TO PVC PIPE.

RESTRAINED PIPE TABLE	**FIGURE GR-04**
POLK COUNTY UTILITIES, FLORIDA	**OCTOBER, 2015**

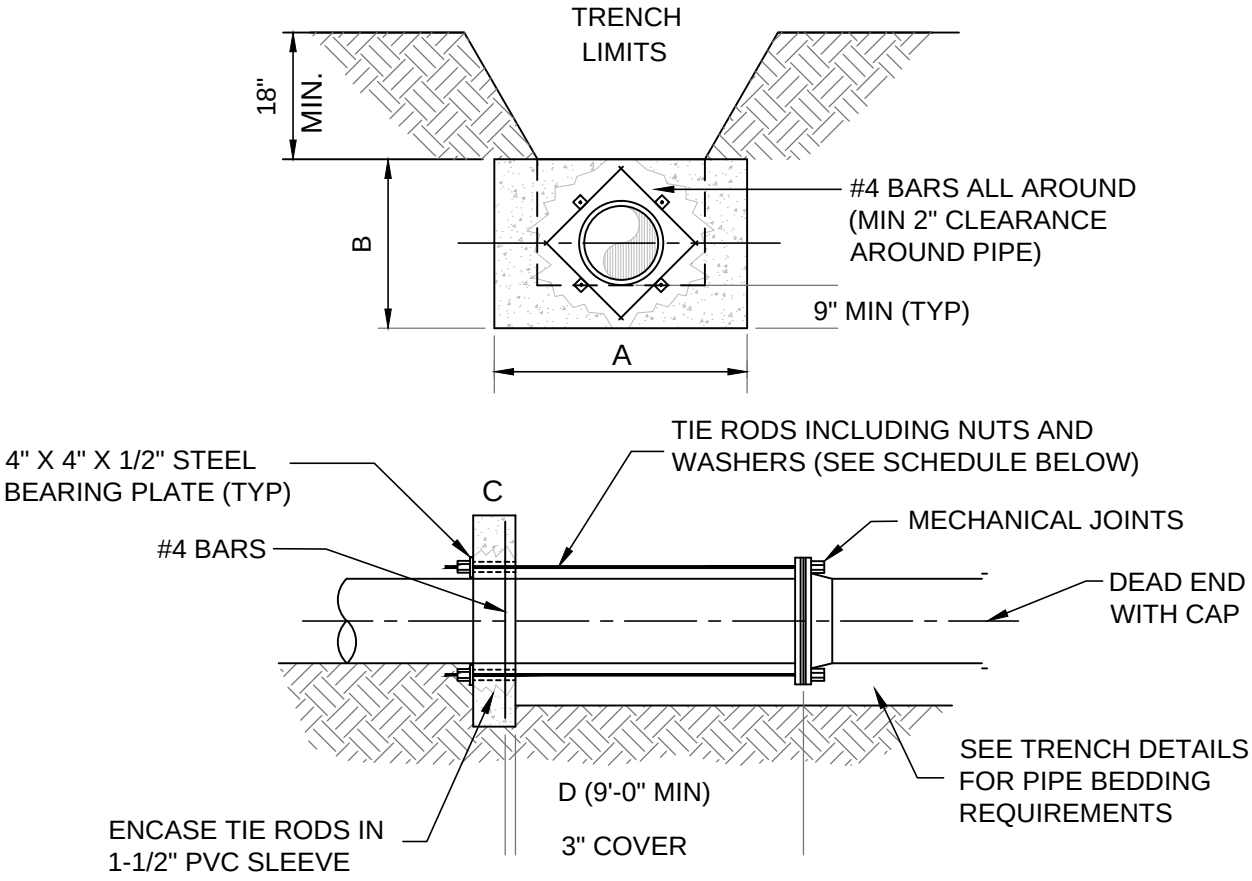

NOTES:

1. ADDITIONAL REINFORCEMENTS SHALL BE AS SPECIFIED BY THE ENGINEER.
2. MINIMUM COMPRESSIVE STRENGTH FOR CONCRETE SHALL BE 3000 PSI.
3. BEDDING, BACKFILL AND COMPACTION SHALL BE AS SPECIFIED ELSEWHERE IN THE STANDARD DRAWINGS.
4. ALL FORM BOARDS SHALL BE REMOVED PRIOR TO BACKFILL.
5. NO ALLOWANCE SHALL BE MADE FOR FRICTION BETWEEN THE PIPE WALL AND THE THRUST COLLAR.
6. DESIGN PRESSURE: 150 PSI.
7. A GATE VALVE OF A SIZE MATCHING MAIN SIZE SHALL BE INSTALLED PRIOR TO THE END CAP ON ALL MAINS NOT TERMINATING WITHIN A CUL-DE-SAC.

SCHEDULE OF DIMENSIONS AND MATERIALS

PIPE SIZE (INCHES)	DIMENSIONS (FT.)				TIE RODS REQ'D	
	A	B	C	D	DIA.	NO.
4	2.0	2.0	1.0		3/4	2
6	2.0	2.0	1.0		3/4	2
8	2.5	2.5	1.0		3/4	2
10	3.5	3.0	1.0		3/4	2
12	5.0	3.0	1.0		3/4	2
16	6.0	4.0	1.5		3/4	4
20	8.0	5.0	1.5		3/4	6
24	9.0	6.0	1.5		3/4	8
30	11.5	7.5	2.0		1	12
36	13.5	9.0	2.0		1	15

NOTE: THRUST COLLAR AREAS TO BE COMPUTED ON BASIS OF 2000 LBS/SF SOIL RESTRAINT BEARING.

THRUST COLLAR	**FIGURE GR-05**
POLK COUNTY UTILITIES, FLORIDA	**DECEMBER, 2010**

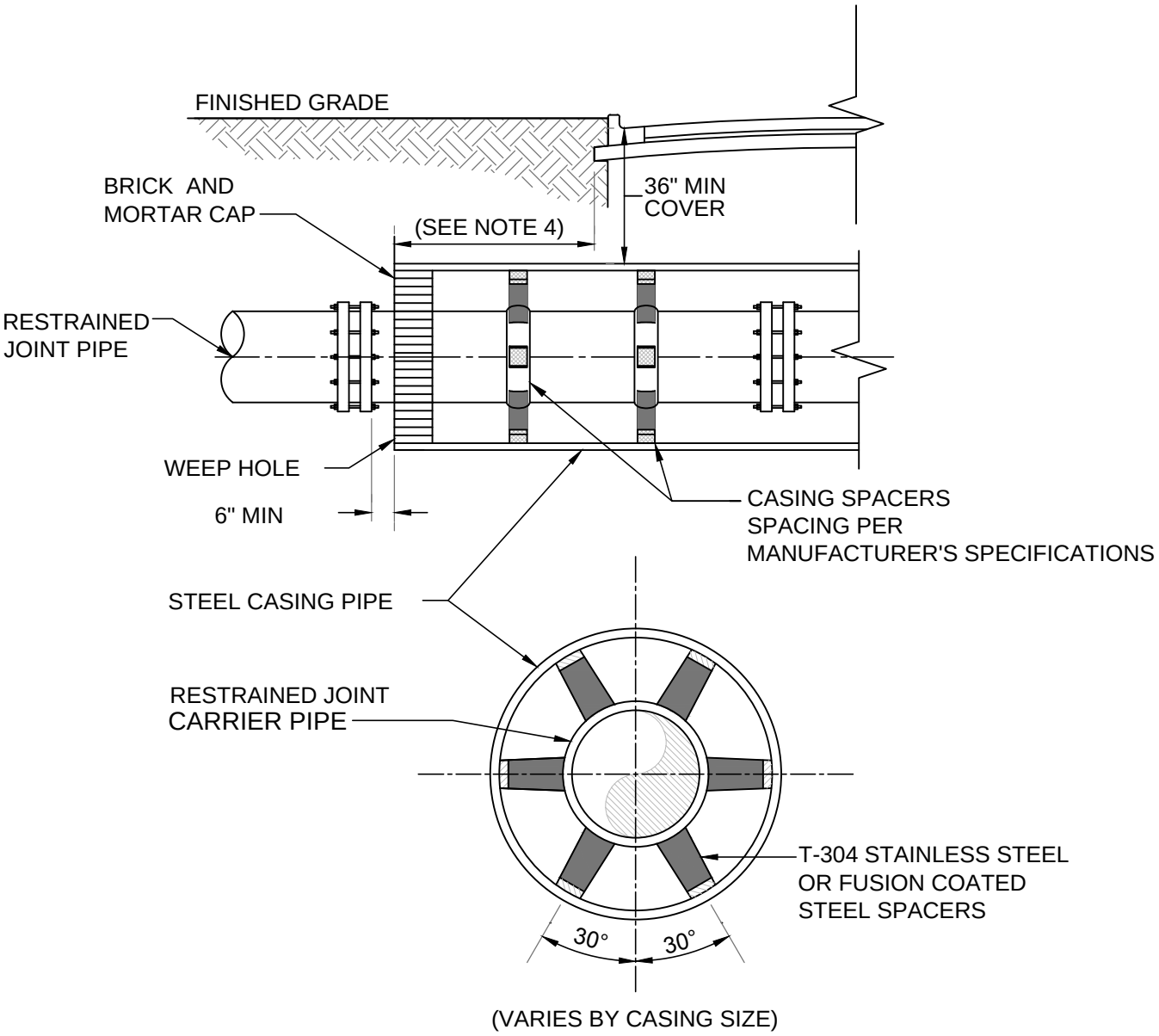

NOTES:

1. WHEN CONSTRUCTION IS WITHIN FDOT JURISDICTION, ADDITIONAL REQUIREMENTS OF THE UTILITY ACCOMMODATION GUIDE SHALL BE MET.
2. DISTANCE BETWEEN SPACERS TO BE PER MANUFACTURER'S SPECIFICATIONS.
3. NO FILL MATERIAL OF ANY KIND SHALL BE PLACED BETWEEN THE ANNULAR SPACE OF THE CASING AND CARRIER PIPE.
4. THE CASING SHALL EXTEND A MINIMUM OF 6' OR MEET THE RIGHT-OF-WAY AUTHORITY'S REQUIREMENTS BEYOND THE EDGE OF THE ROADWAY, WHICHEVER IS GREATER.

BORE AND JACK	**FIGURE GR-06**
POLK COUNTY UTILITIES, FLORIDA	**DECEMBER, 2010**

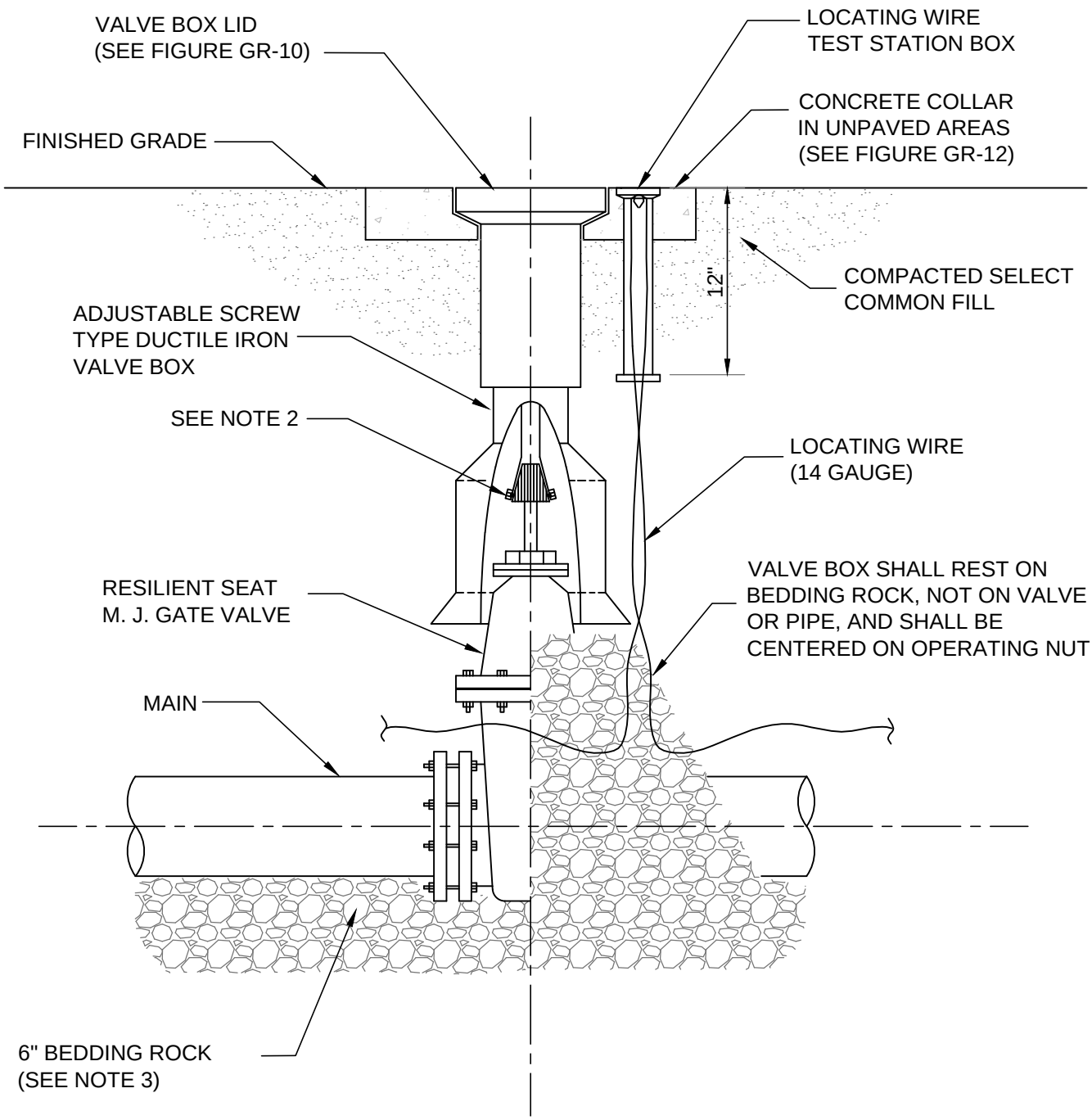

NOTES:

1. PVC PIPE OR DUCTILE IRON PIPE EXTENSIONS SHALL NOT BE USED ON VALVE BOX INSTALLATION IN PAVED AREAS.
2. THE VALVE ACTUATING NUT SHALL BE EXTENDED TO BE WITHIN 3' OF FINISHED GRADE.
3. BEDDING MATERIAL SHALL CONFORM TO FDOT NO. 57 AGGREGATE.
4. WIRE SHALL TERMINATE AT THE TOP OF THE TEST STATION BOX WITH 12" OF COILED EXCESS LENGTH.
5. REFER TO FIGURE GR-11 FOR INSTALLATIONS AT A DEPTH OF 6' OR GREATER.

REV. : SEPTEMBER, 2014

GATE VALVE AND BOX (SHALLOW)	**FIGURE GR-07**
POLK COUNTY UTILITIES, FLORIDA	**DECEMBER, 2010**

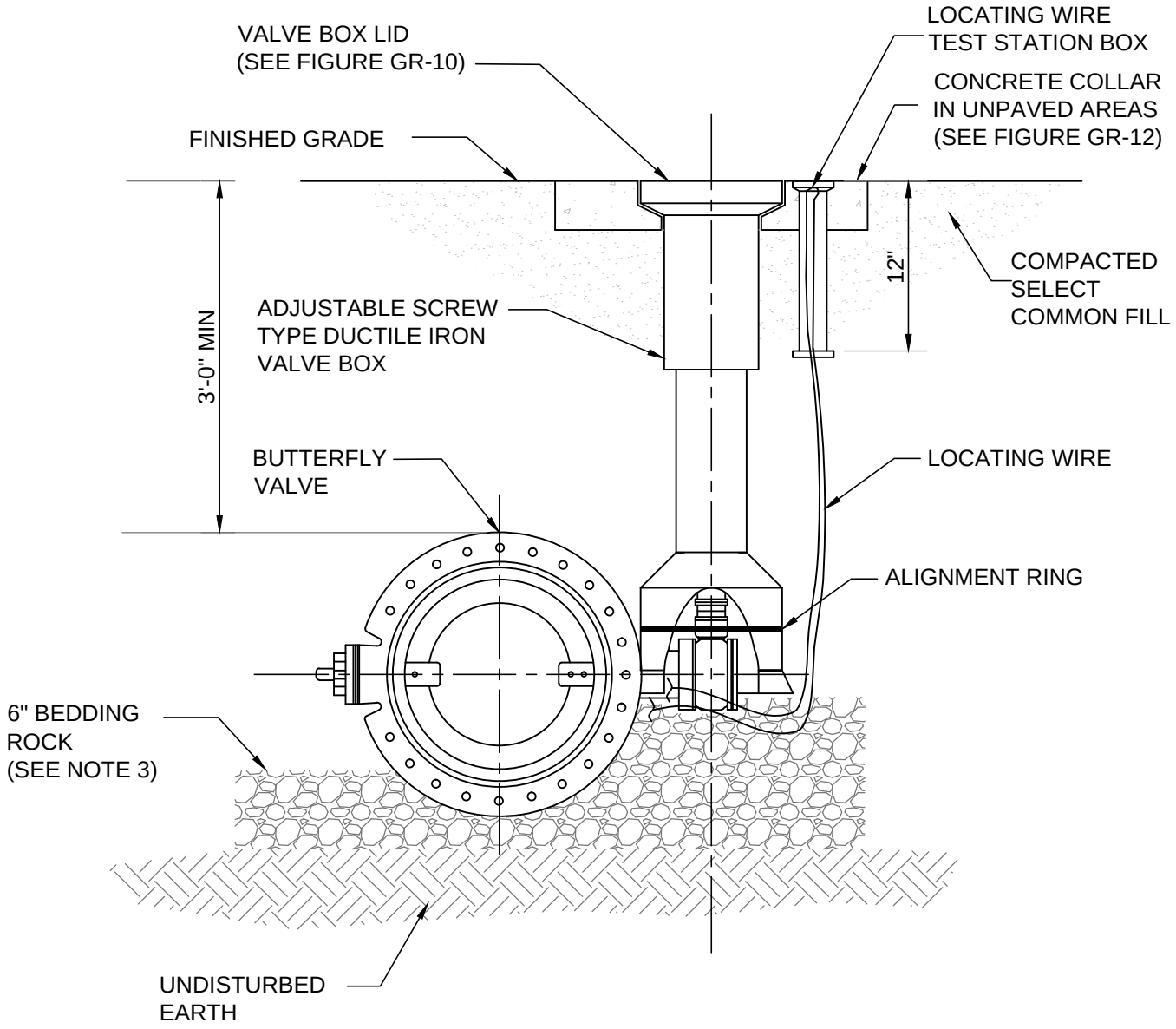

NOTES:

1. PVC PIPE OR DUCTILE IRON PIPE EXTENSIONS SHALL NOT BE USED ON VALVE BOX INSTALLATION IN PAVED AREAS.
2. THE ACTUATING NUT FOR VALVES SHALL BE EXTENDED TO 3' OF FINISHED GRADE.
3. BEDDING MATERIAL SHALL CONFORM TO FDOT NO. 57 AGGREGATE.
4. WIRE SHALL TERMINATE IN TEST STATION BOX.
5. VALVE BOX SHALL REST ON BEDDING ROCK NOT ON VALVE OR PIPE AND SHALL BE CENTERED ON OPERATING NUT.
6. REFER TO FIGURE GR-11 FOR INSTALLATIONS AT A DEPTH OF 6' OR GREATER.

REV. : SEPTEMBER, 2014

BUTTERFLY VALVE AND BOX (SHALLOW) (FOR STORAGE TANK ISOLATION USE ONLY)	**FIGURE GR-08**
POLK COUNTY UTILITIES, FLORIDA	**DECEMBER, 2010**

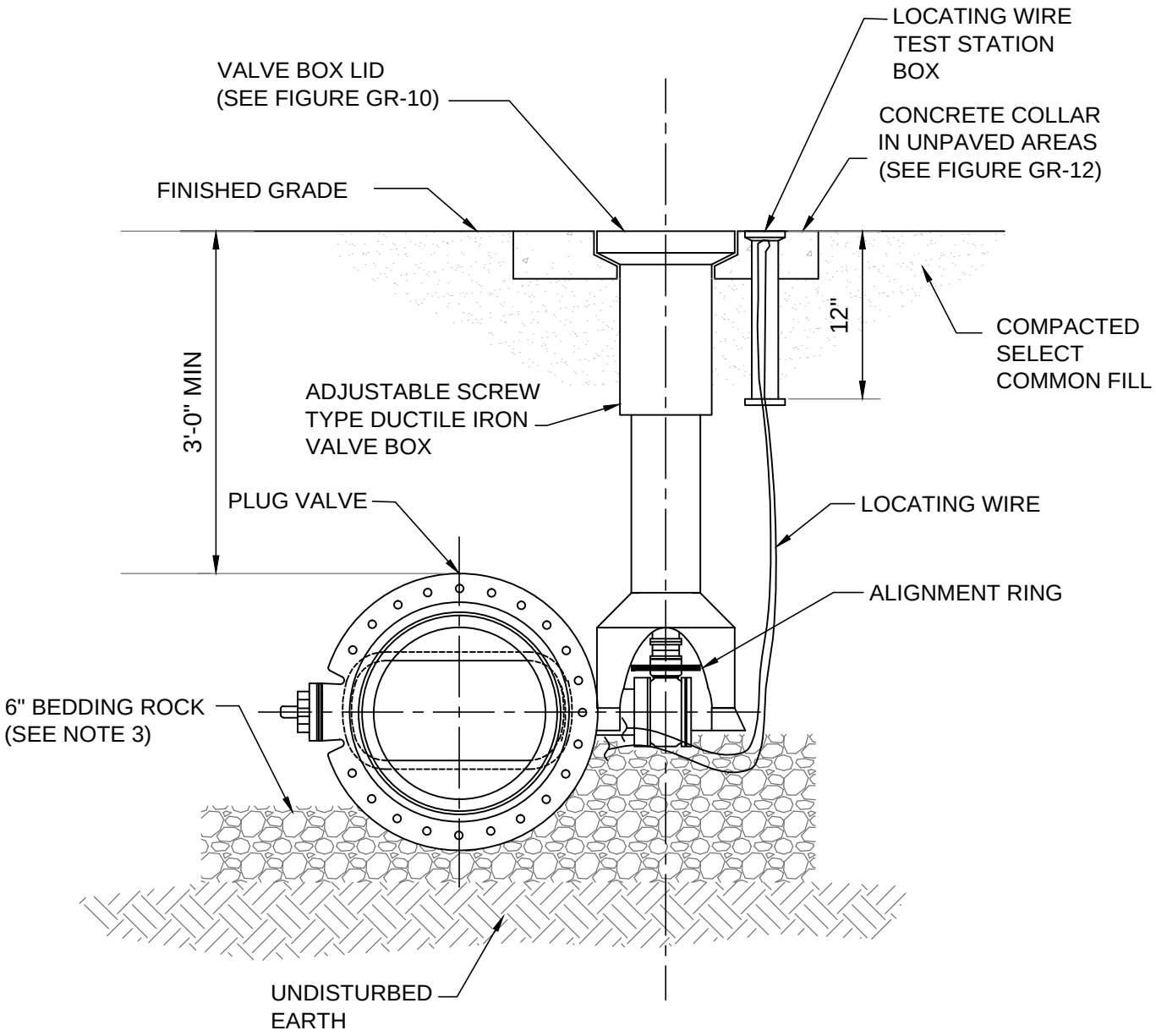

NOTES:

1. PVC PIPE OR DUCTILE IRON PIPE EXTENSION SHALL NOT BE USED ON VALVE BOX INSTALLATION IN PAVED AREAS.
2. THE VALVE ACTUATING NUT FOR SHALL BE EXTENDED TO BE WITHIN 3' OF FINISHED GRADE.
3. BEDDING MATERIAL SHALL CONFORM TO FDOT NO. 57 AGGREGATE.
4. WIRE SHALL TERMINATE IN TEST STATION BOX.
5. VALVE BOX SHALL REST ON BEDDING ROCK NOT ON VALVE OR PIPE AND SHALL BE CENTERED ON OPERATING NUT.
6. REFER TO FIGURE GR-11 FOR INSTALLATIONS AT A DEPTH OF 6' OR GREATER.

REV. : SEPTEMBER, 2014

PLUG VALVE (SHALLOW) **(FOR WASTEWATER TREATMENT FACILITY USE ONLY)**	**FIGURE** **GR-09**
POLK COUNTY UTILITIES, FLORIDA	**DECEMBER, 2010**

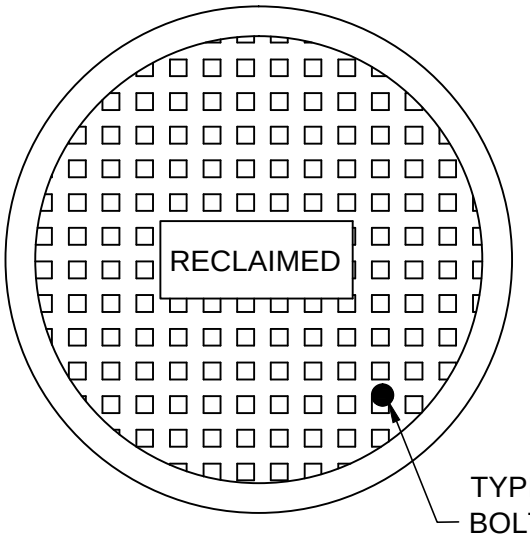

TYPICAL LOCKING BOLT (SEE NOTE 1)

RECLAIMED WATER

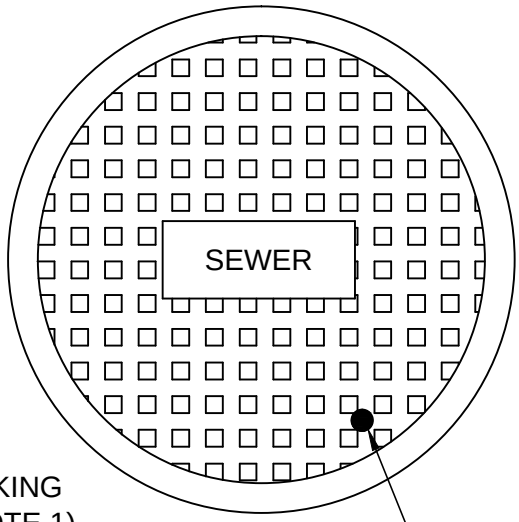

TYPICAL LOCKING BOLT (SEE NOTE 1)

WASTE WATER

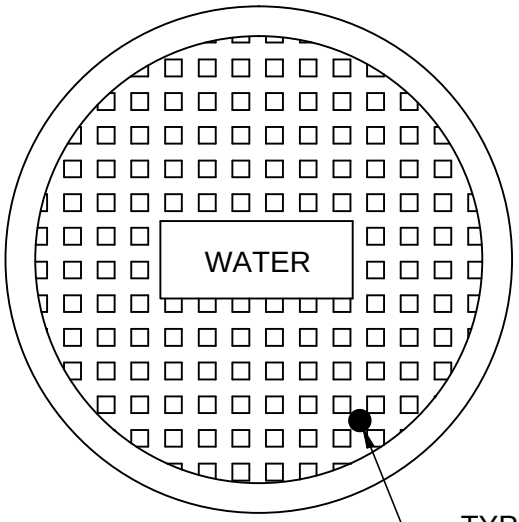

TYPICAL LOCKING BOLT (SEE NOTE 1)

POTABLE WATER

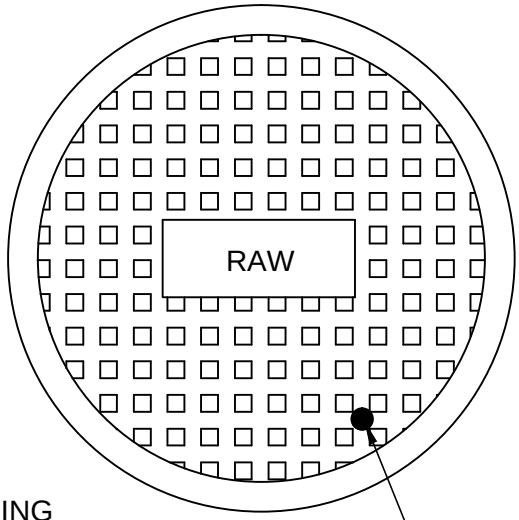

TYPICAL LOCKING BOLT (SEE NOTE 1)

RAW WATER

NOTE:

1. LOCKING LIDS ARE REQUIRED ON ALL VALVE BOXES LOCATED IN ROADWAYS WITH SPEED LIMITS ABOVE 30 MPH OR ON MAINS THAT ARE 16 INCHES IN DIAMETER OR LARGER.

TYPICAL VALVE BOX COVER	**FIGURE GR-10**
POLK COUNTY UTILITIES, FLORIDA	**DECEMBER, 2010**

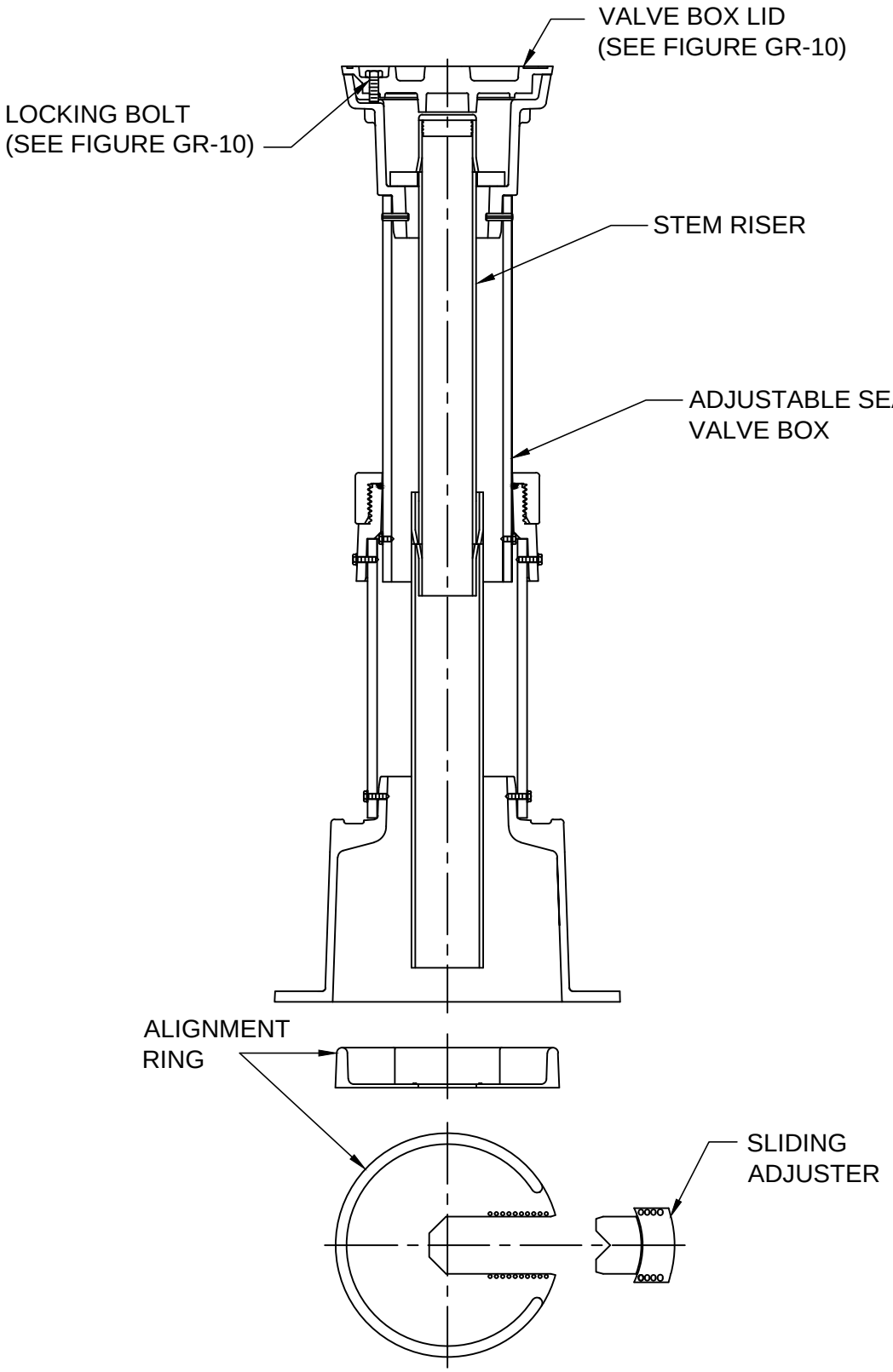

NOTES:

1. REQUIRED ON ALL MAINS WHENEVER THE TOP OF THE VALVE NUT IS 6 FEET OR DEEPER BELOW THE FINISHED SURFACE ELEVATION THAT IS DIRECTLY ABOVE THE VALVE LOCATION.

VALVE BOX ASSEMBLY (DEEP)	**FIGURE GR-11**
POLK COUNTY UTILITIES, FLORIDA	**DECEMBER, 2010**

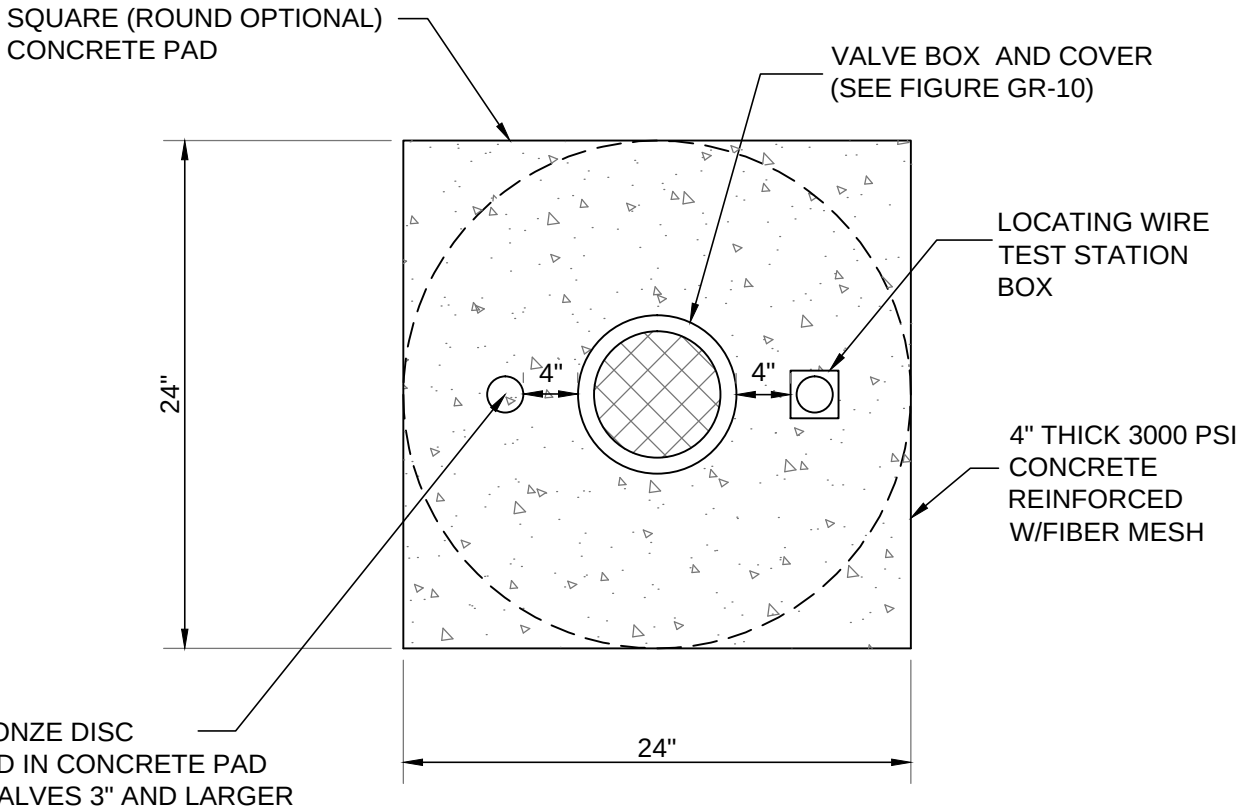

ID TAG :
3" DIA. BRONZE DISC
ANCHORED IN CONCRETE PAD
FOR ALL VALVES 3" AND LARGER
* SIZE OF VALVE
* TYPE OF SERVICE
* DIRECTION & NUMBER OF
TURNS TO OPEN

OUTSIDE PAVEMENT

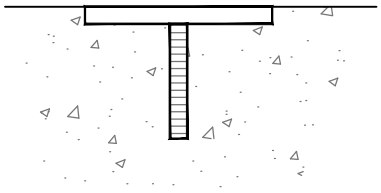

TYPICAL ID TAG
SECTION VIEW

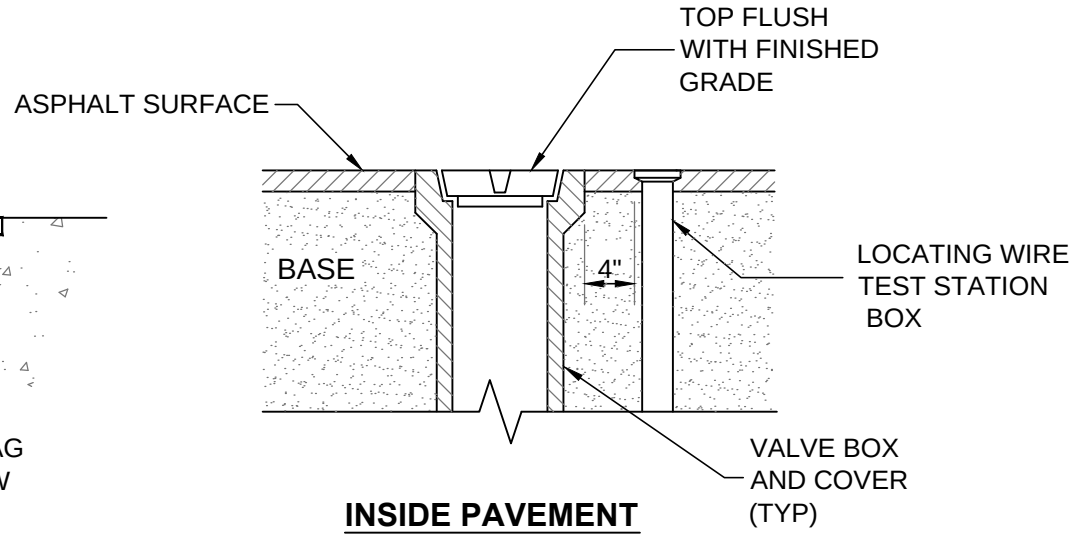

INSIDE PAVEMENT

NOTES:

1. BRASS IDENTIFICATION DISC AND VALVE COLLAR SHALL BE REQUIRED FOR ALL VALVES LOCATED OUTSIDE OF PAVEMENT.

REV. : SEPTEMBER, 2014

VALVE COLLAR	**FIGURE GR-12**
POLK COUNTY UTILITIES, FLORIDA	**DECEMBER, 2010**

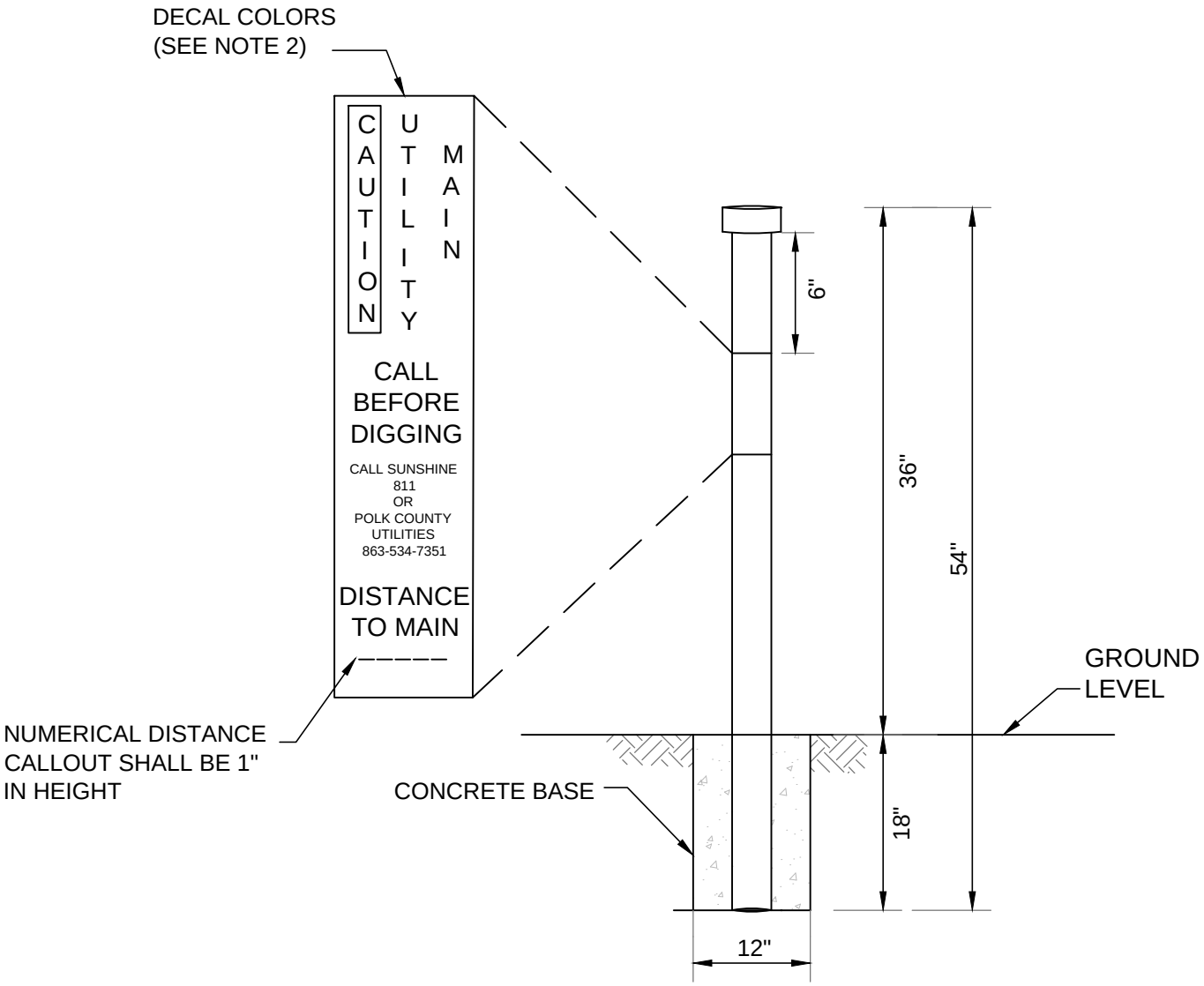

NOTES:

1. MARKERS SHALL BE 4" DIAMETER SCH 80 PVC OR HDPE PIPE WITH GLUED CAP OR PCU APPROVED EQUAL.
2. BACKGROUND COLORS FOR DECALS SHALL BE BLUE FOR POTABLE WATER; WHITE FOR RAW WATER; GREEN FOR WASTEWATER; AND PANTONE PURPLE 522C FOR RECLAIMED WATER WITH BLACK OR WHITE LETTERING TO CONTRAST BACKGROUND COLOR.
3. MARKERS SHALL BE PLACED AT THE EDGE OF THE R/W AND ALONG ALL DRAINAGE EASEMENT LINES.
4. MARKERS SHALL BE PLACED EVERY 1000' AND AT VALVES (EXCEPT WATER VALVES NEAR FIRE HYDRANTS)
5. MARKERS SHALL NOT BE USED ALONG LOCAL RESIDENTIAL STREETS.

PIPE LINE MARKER (TYPICAL)	**FIGURE GR-13**
POLK COUNTY UTILITIES, FLORIDA	**DECEMBER, 2010**

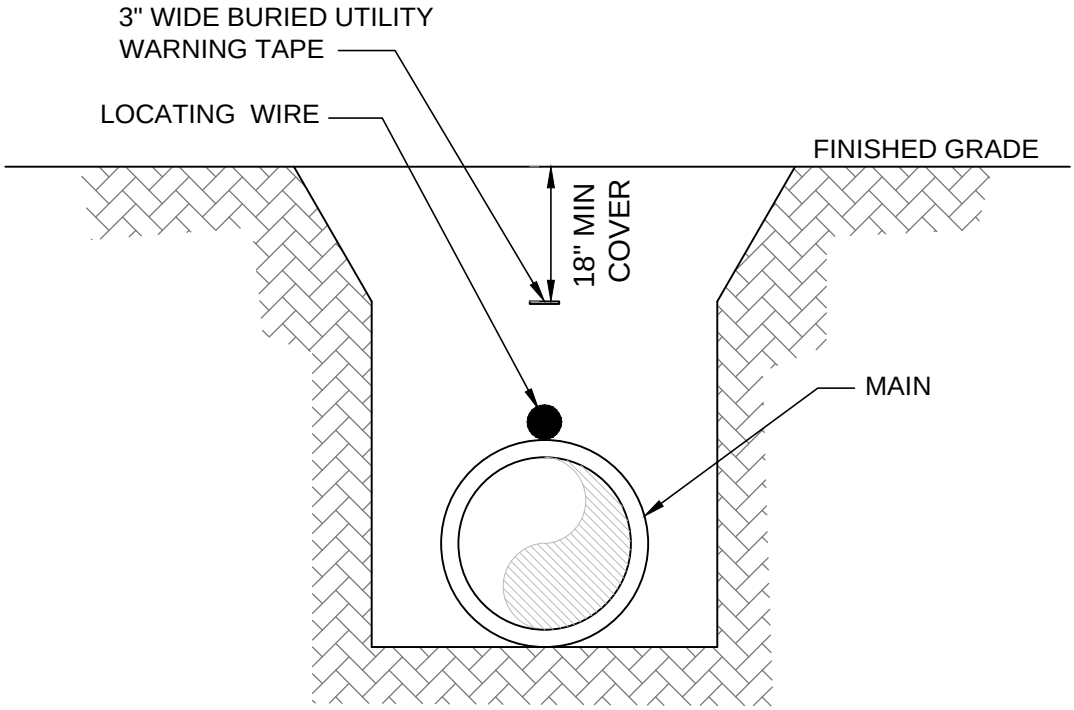

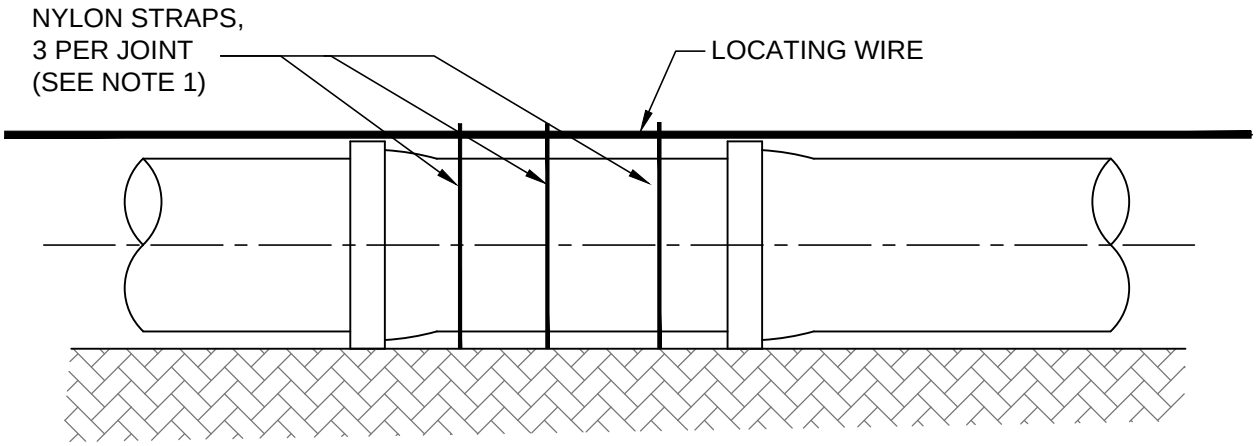

NOTES:

1. ALL PIPE SHALL REQUIRE INSULATED LOCATING WIRE (14 GAUGE SINGLE STRAND COPPER) CAPABLE OF DETECTION BY A CABLE LOCATOR AND SHALL BE SECURED TO THE TOP AND ON THE CENTERLINE OF THE PIPE WITH NYLON STRAPS THAT ARE SLIPPED ON THE PIPE PRIOR TO THE INSTALLATION OF EACH PIPE SECTION, AND TIGHTENED OVER THE WIRE AFTER INSTALLATION.
2. LOCATING WIRE SHALL TERMINATE AS INDICATED BY FIGURES GR-07 AND GR-12.
3. ALL CONNECTIONS SHALL BE MADE USING WATER-PROOF CONNECTORS.

REV. : SEPTEMBER, 2014

PIPE LOCATING WIRE	**FIGURE GR-14-1**
POLK COUNTY UTILITIES, FLORIDA	**DECEMBER, 2010**

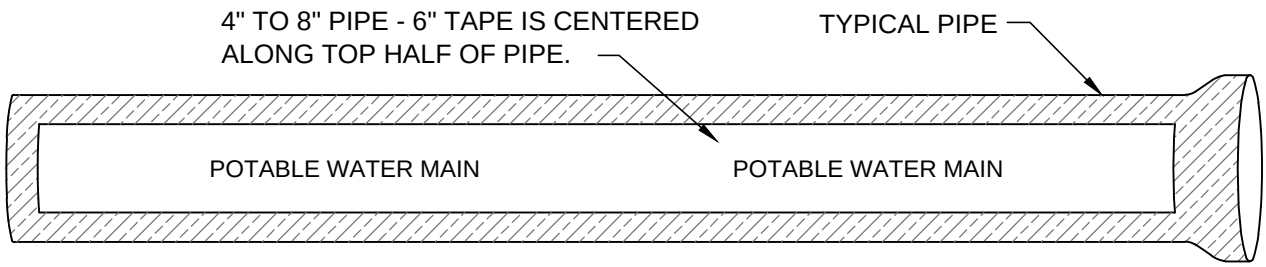

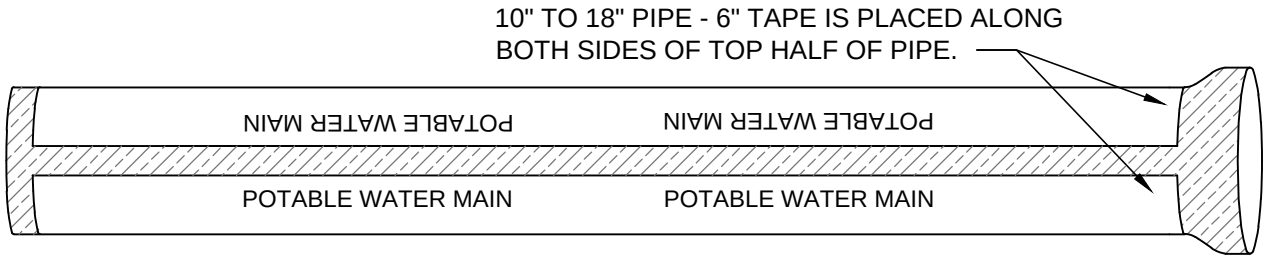

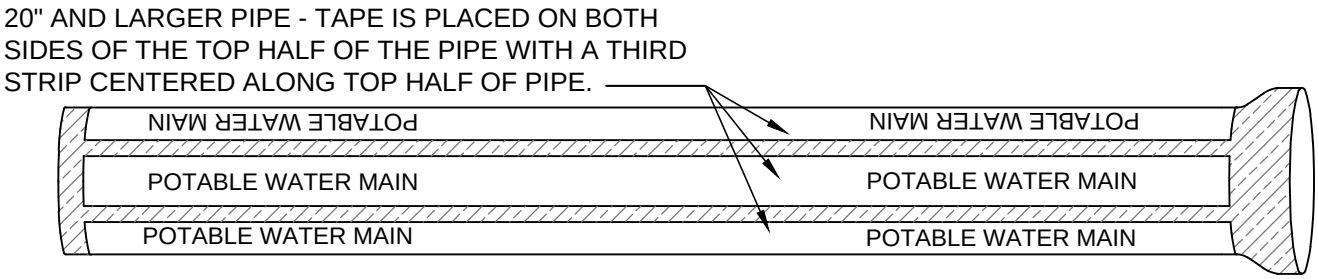

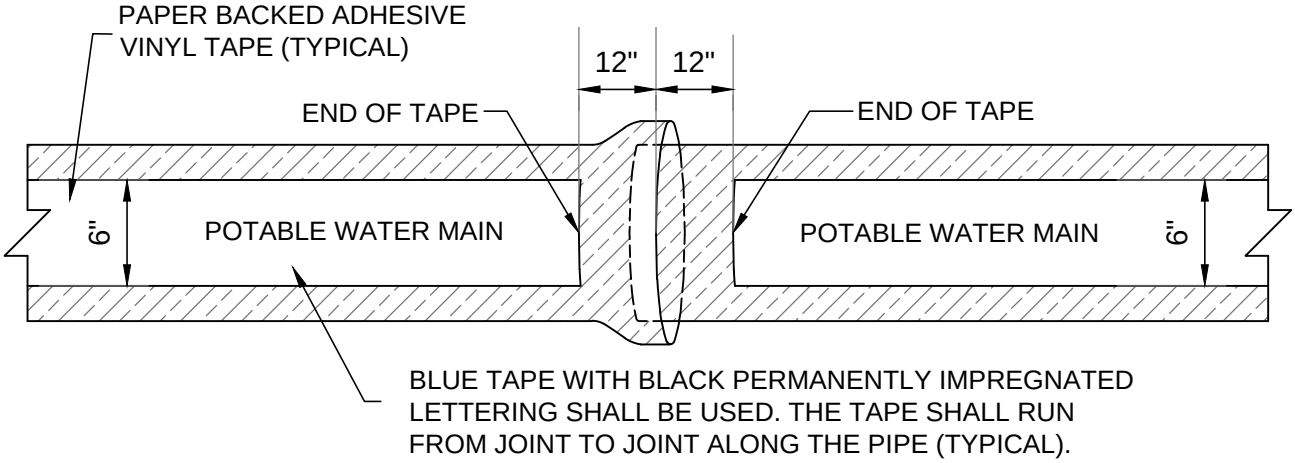

DUCTILE IRON PIPE POTABLE WATER MAIN WITH IDENTIFICATION TAPE
NTS

PVC PIPE COLOR : BLUE

PIPE IDENTIFICATION POTABLE WATER MAINS	**FIGURE GR-14-2**
POLK COUNTY UTILITIES, FLORIDA	**DECEMBER, 2010**

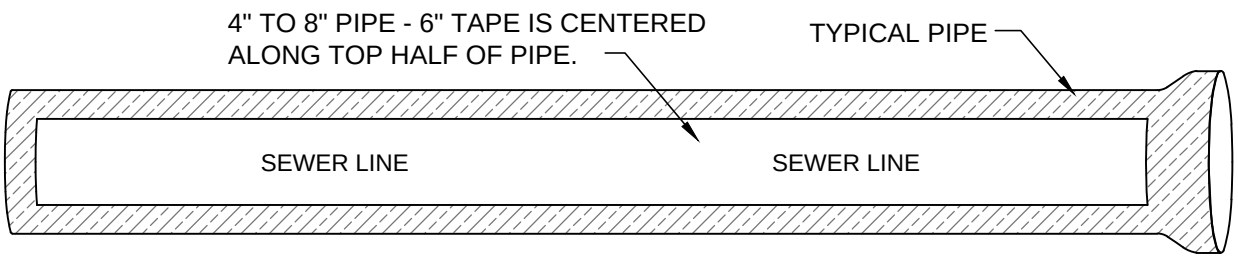

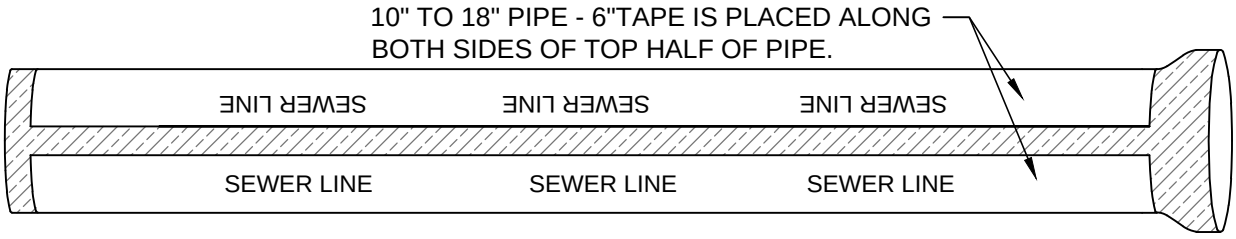

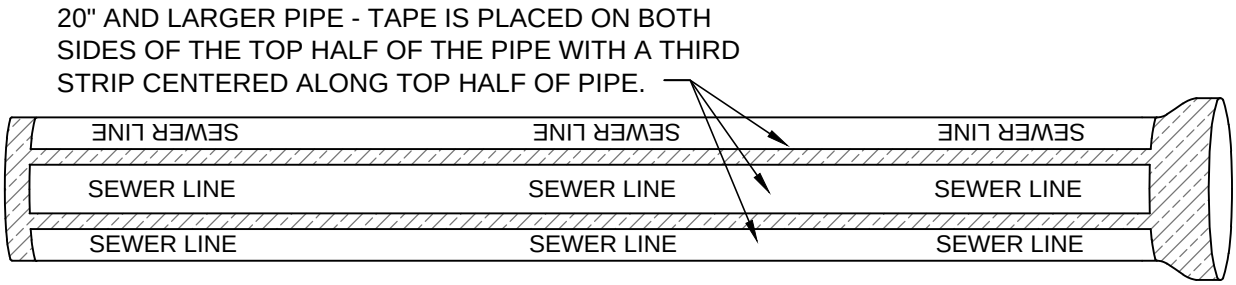

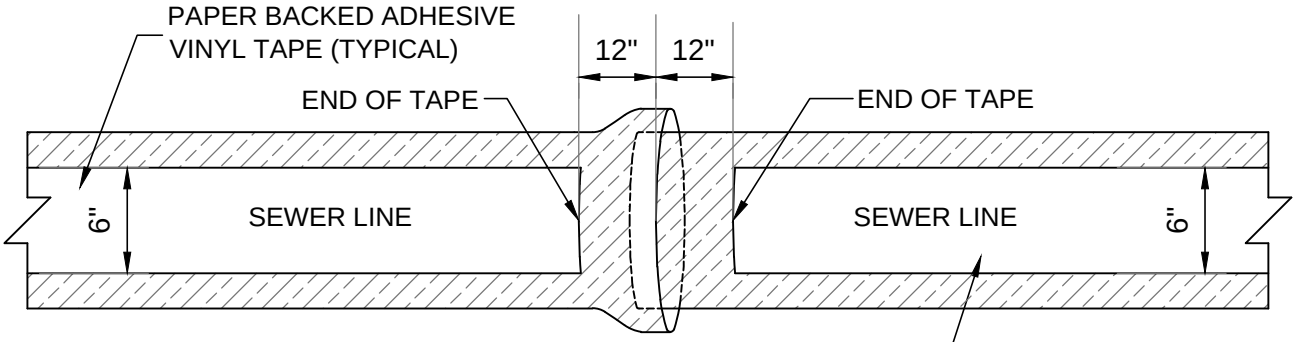

FOR SEWER LINES - TAPE SHALL BE GREEN WITH BLACK LETTERING. FOR SEWER FORCE MAIN - TAPE SHALL BE BROWN WITH BLACK LETTERING. TAPE SHALL RUN FROM JOINT TO JOINT ALONG THE LENGTH OF THE PIPE (TYPICAL).

DUCTILE IRON PIPE FORCE MAINS WITH IDENTIFICATION TAPE

NTS

PVC PIPE COLOR : SOLID LIGHT GREEN

PIPE IDENTIFICATION WASTEWATER FORCE AND GRAVITY MAINS	FIGURE GR-14-3
POLK COUNTY UTILITIES, FLORIDA	DECEMBER, 2010

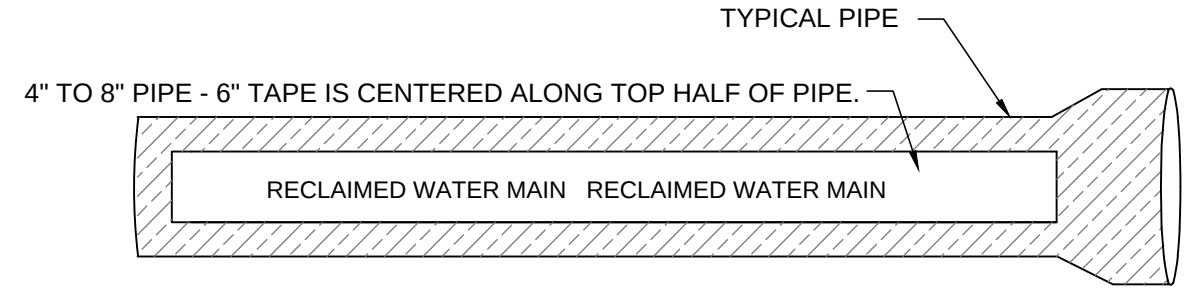

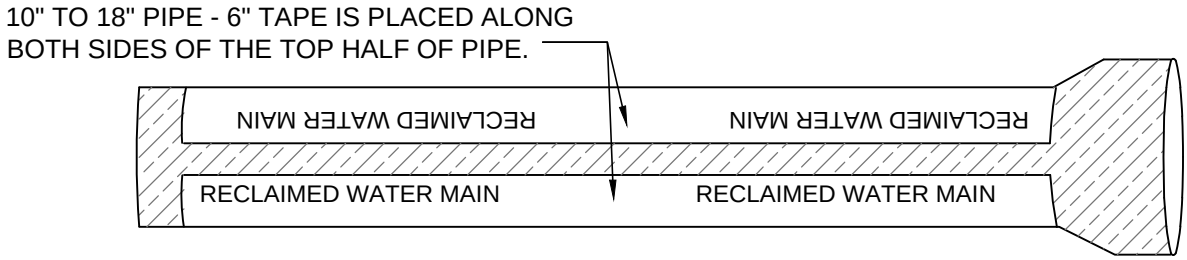

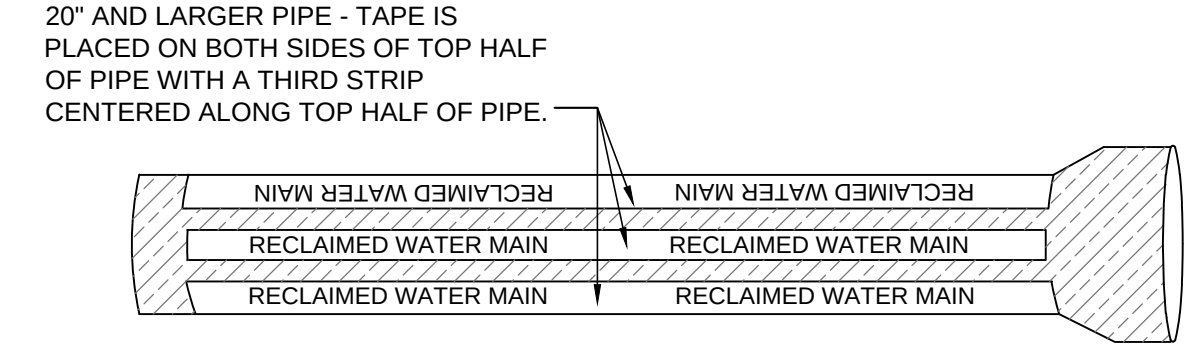

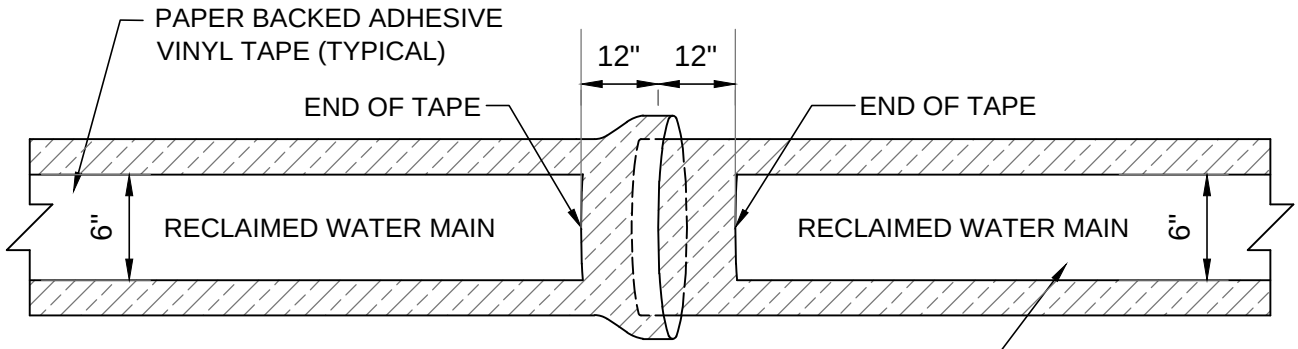

DUCTILE IRON PIPE RECLAIMED WATER MAIN WITH IDENTIFICATION TAPE
NTS

PVC PIPE COLOR : PANTONE PURPLE 522C

PIPE IDENTIFICATION RECLAIMED WATER MAINS	**FIGURE GR-14-4**
POLK COUNTY UTILITIES, FLORIDA	**DECEMBER, 2010**

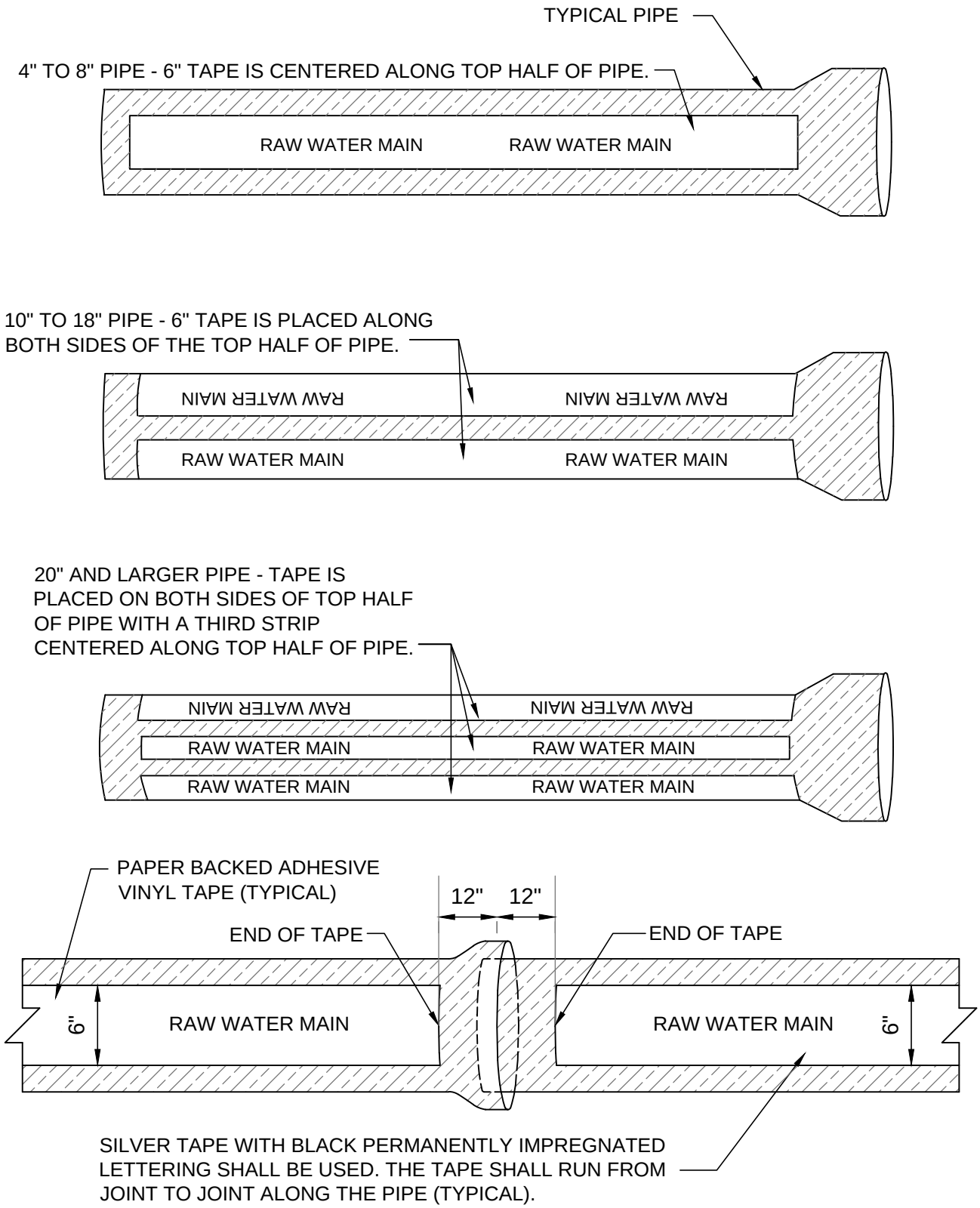

DUCTILE IRON PIPE RAW WATER MAIN WITH IDENTIFICATION TAPE

NTS

REV MARCH, 2012

PVC PIPE COLOR OLIVE GREEN OR WHITE OR BLUE IF OLIVE GREEN OR WHITE ARE UNAVAILABLE WITH A 3" OLIVE GREEN STRIPE WITH BLACK LETTERING

PIPE IDENTIFICATION RAW WATER MAINS	**FIGURE GR-14-5**
POLK COUNTY UTILITIES, FLORIDA	**DECEMBER, 2010**

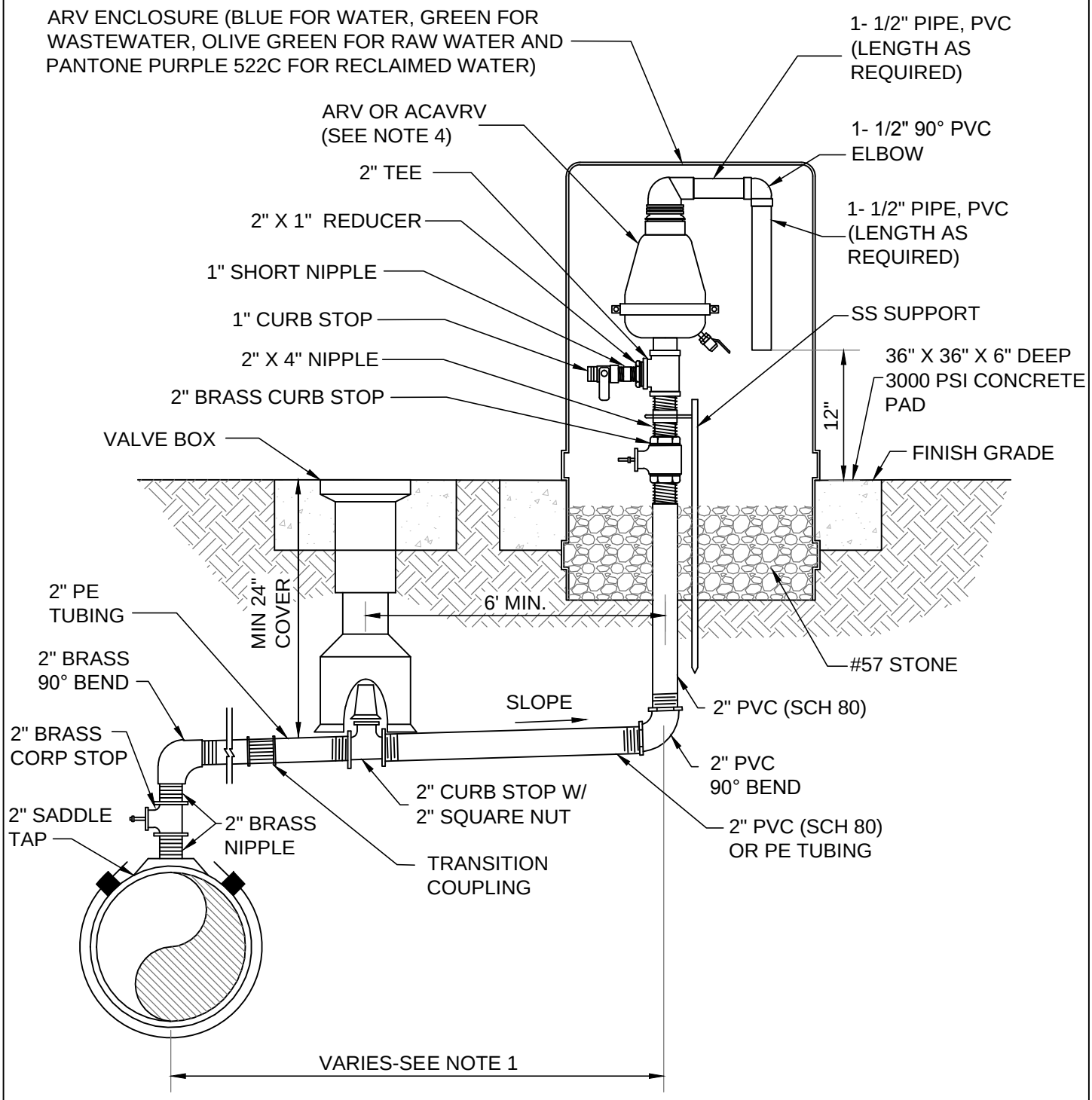

NOTES:

1. OFFSET DISTANCE TO BE FIELD DETERMINED AND AS CLOSE TO THE RIGHT-OF-WAY AS POSSIBLE.
2. ADJUST HORIZONTAL LOCATION OF SIDEWALK, AS REQUIRED TO AVOID ARV ENCLOSURE.
3. ABOVE DETAIL IS BASED ON 2" RELEASE VALVE. CHANGE PIPE AND FITTINGS ACCORDINGLY FOR OTHER VALVE SIZES AND TYPES. VALVE SIZES AND NUMBERS TO BE DETERMINED BY THE ENGINEER AND APPROVED BY PCU PRIOR TO INSTALLATION.
4. AUTOMATIC COMBINATION AIR AND VACUUM RELEASE VALVES (ACAVRV) SHALL UTILIZED AS APPROPRIATE OR REQUIRED BY PCU.

REV DECEMBER, 2012

AUTOMATIC AIR RELEASE VALVE (ABOVE GROUND)	**FIGURE GR-15-1**
POLK COUNTY UTILITIES, FLORIDA	**DECEMBER, 2010**

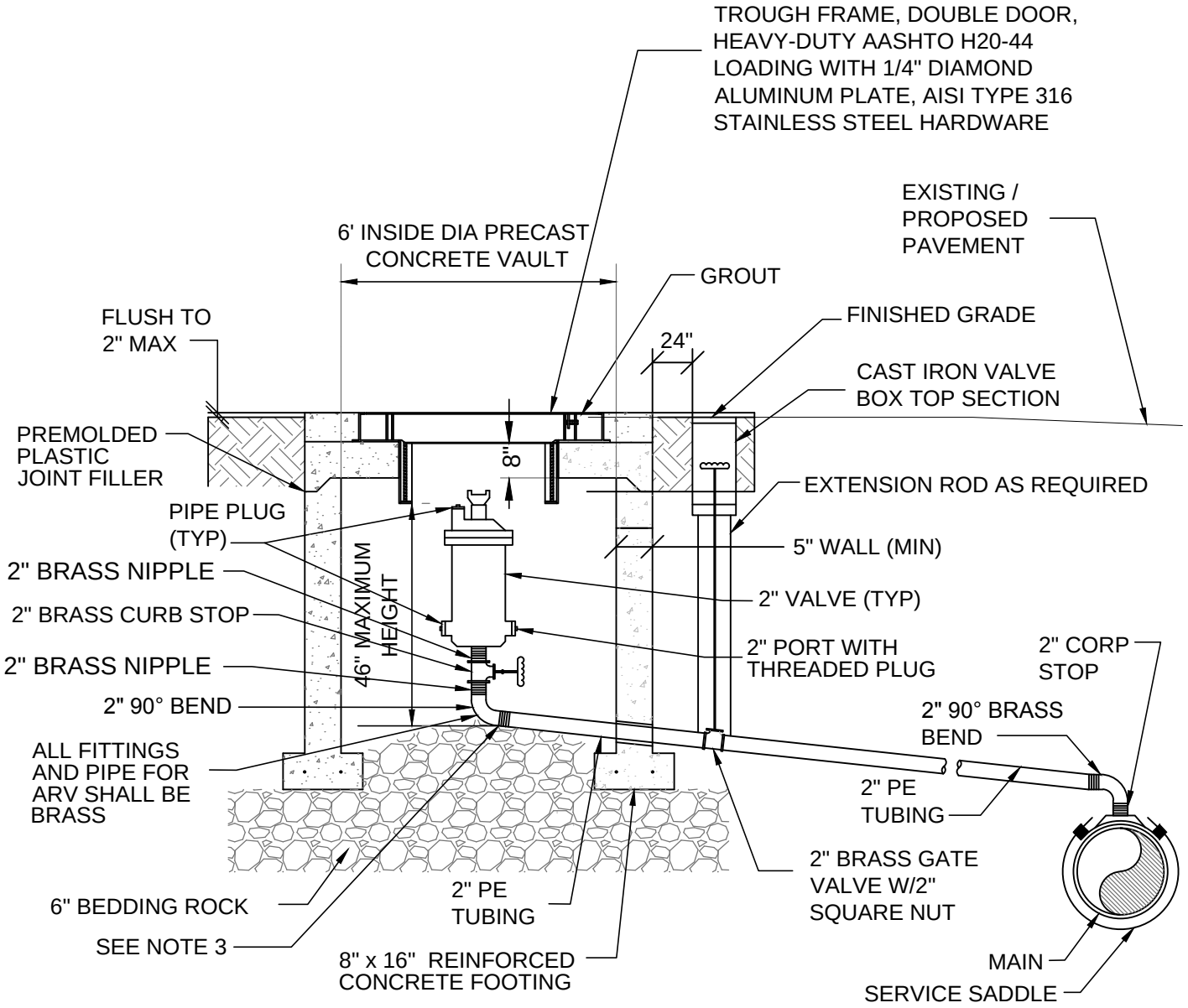

NOTES :

1. ABOVE DETAIL SHALL ONLY BE UTILIZED WHEN PCU DETERMINES THAT FIGURE GR-15-1 IS NOT APPROPRIATE FOR THE PROPOSED INSTALLATION.
2. VALVE SHALL BE SUPPORTED TO VAULT WALL.
3. THE MINIMUM DIMENSION FROM ELBOW INVERT TO FINISHED GRADE SHALL BE 4.0 FEET.
4. ABOVE DETAIL IS BASED ON 2" AIR RELEASE VALVE. CHANGE PIPE AND FITTINGS ACCORDINGLY FOR OTHER VALVE SIZES AND TYPES. VALVE SIZES AND NUMBERS TO BE DETERMINED BY THE ENGINEER AND APPROVED BY PCU PRIOR TO INSTALLATION.
5. AUTOMATIC COMBINATION AIR AND VACUUM RELEASE VALVE SHALL UTILIZED AS APPROPRIATE OR REQUIRED BY PCU.

	REV MARCH, 2012
AUTOMATIC AIR RELEASE VALVE (IN GROUND)	**FIGURE GR-15-2**
POLK COUNTY UTILITIES, FLORIDA	**DECEMBER, 2010**

PROPOSED UTILITY	HORIZONTAL & VERTICAL SEPARATION REQUIREMENTS								
	POTABLE WATER (PW)		RECLAIMED WATER (RW)		SAN SEWER (SS) GRAVITY & FM)		STORM SEWER		ACCEPTABLE VARIANCES
	HORIZ	VERT	HORIZ	VERT	HORIZ	VERT	HORIZ	VERT	
POTABLE WATER	-	-	3'	12"	6'	12"	3'	12"	REFER TO GENERAL NOTE #4
RECLAIMED WATER	3'	12"	-	-	3'	12"	*	*	
SANITARY SEWER	6'	12"	3'	12"	-	-	*	*	

* MINIMUM SEPARATION SHALL BE AS SPECIFIED BY THE ENTITY HAVING JURIDICTION.

GENERAL NOTES:

1. THE TABLE MEETS SEPARATION REQUIREMENTS AS DESCRIBED BY FDEP IN THE FLORIDA ADMINISTRATION CODE (FAC). THESE SEPARATION REQUIREMENTS SHALL APPLY BETWEEN NEWLY PROPOSED UTILITY LINES AND EXISTING OR PROPOSED UTILITY LINES.

2. FOR THE PURPOSE OF THIS TABLE, RECLAIMED WATER SHALL MEAN UNRESTRICTED PUBLIC ACCESS RECLAIMED WATER AS DEFINED BY F.A.C. 62-610. RAW WATER AND OTHER TYPES OF RECLAIMED WATER SHALL BE CONSIDERED RAW SEWAGE AND SEPARATION LISTED FOR SANITARY SEWER SHALL APPLY.

3. ALL SEPARATION DISTANCES ARE FROM OUTSIDE OF PIPE TO OUTSIDE OF PIPE.

4. ACCEPTABLE VARIANCES:
   A. WHERE HORIZONTAL SEPARATION IS NOT ATTAINABLE FOR NEW INSTALLATIONS OF PW AND SS, THE PIPES WILL BE INSTALLED IN SEPARATE TRENCHES AND THE BOTTOM OF THE PW MAIN WILL BE 12" HIGHER THAN THE TOP OF THE SS.
   B. WHERE HORIZONTAL SEPARATION IS NOT ATTAINABLE FOR NEW SS AND A NEW OR EXISTING PW MAIN, THE SS WILL BE UPGRADED TO A DR OF 18.
   C. WHERE INSTALLATION OF A NEW PW MAIN IS IN CONFLICT WITH EXISTING SS, THE FOLLOWING SHALL BE MAINTAINED:
      1. VERTICAL CONFLICT: DEFLECT NEW PW MAIN 12" ABOVE THE EXISTING SS WITH SUFFICIENT COVER FOR THE PW OR 12" BELOW THE EXISTING SS. WHERE DEFLECTION IS NOT POSSIBLE OR MINIMUM COVER NOT MET, THE PW MAIN SHALL BE UPGRADED TO DIP AND CENTERED AT CROSSING.
      2. HORIZONTAL CONFLICT: PW MAIN SHALL BE INSTALLED 18" HIGHER THAN THE EXISTING SS WITH SUFFICIENT COVER OR THE PW WILL BE DIP.
   D. SEPARATION REQUIREMENTS BETWEEN PW AND STORM SEWER ARE THE SAME AS WITH PW AND SS. SPECIAL SUPPORT MAY BE REQUIRED.
   E. WHERE VERTICAL AND HORIZONTAL SEPARATIONS ARE NOT ATTAINABLE FOR PW AND FM, THE FOLLOWING SHALL BE MAINTAINED:
      1. FM UPGRADED TO DR 14 (12" DIA AND UNDER) AND DR 18 (14" DIA AND OVER). WHERE FM IS EXISTING, PW SHALL BE UPGRADED TO DIP.
      2. STAGGER THE LOCATION OF JOINTS FOR EACH PIPE.

5. NO POTABLE WATER MAIN SHALL PASS THROUGH OR COME IN CONTACT WITH ANY PART OF A SANITARY OR STORM WATER MANHOLE OR STRUCTURE.

MINIMUM SEPARATION REQUIREMENTS	**FIGURE GR-16**
POLK COUNTY UTILITIES, FLORIDA	**DECEMBER, 2010**

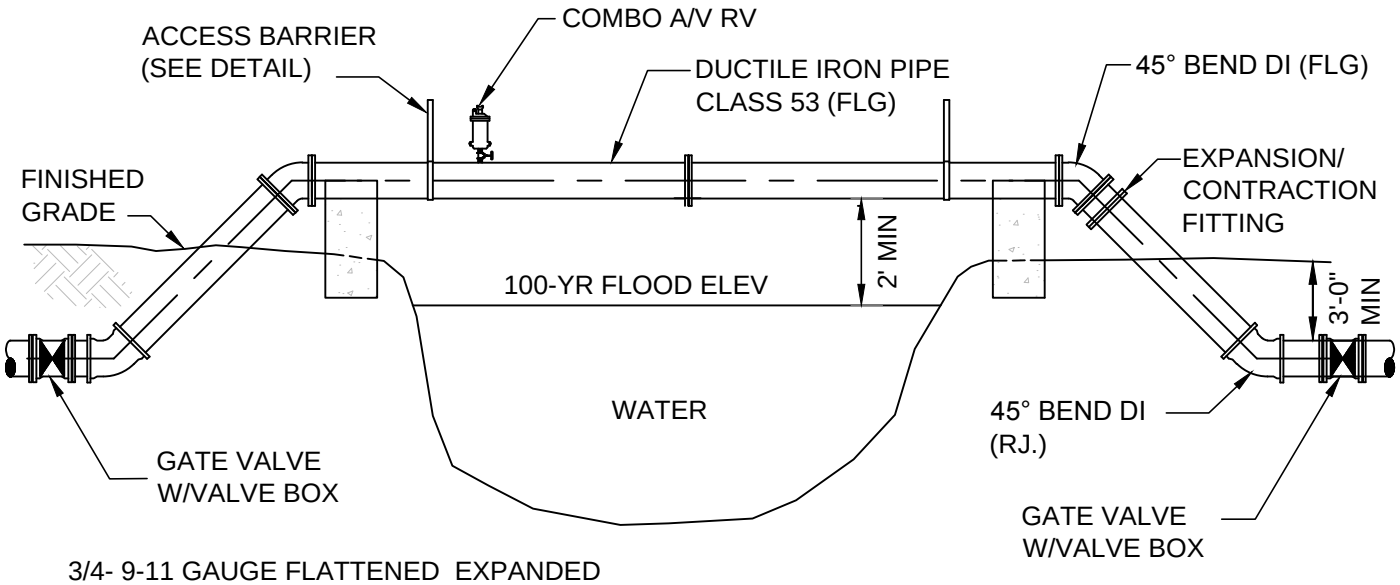

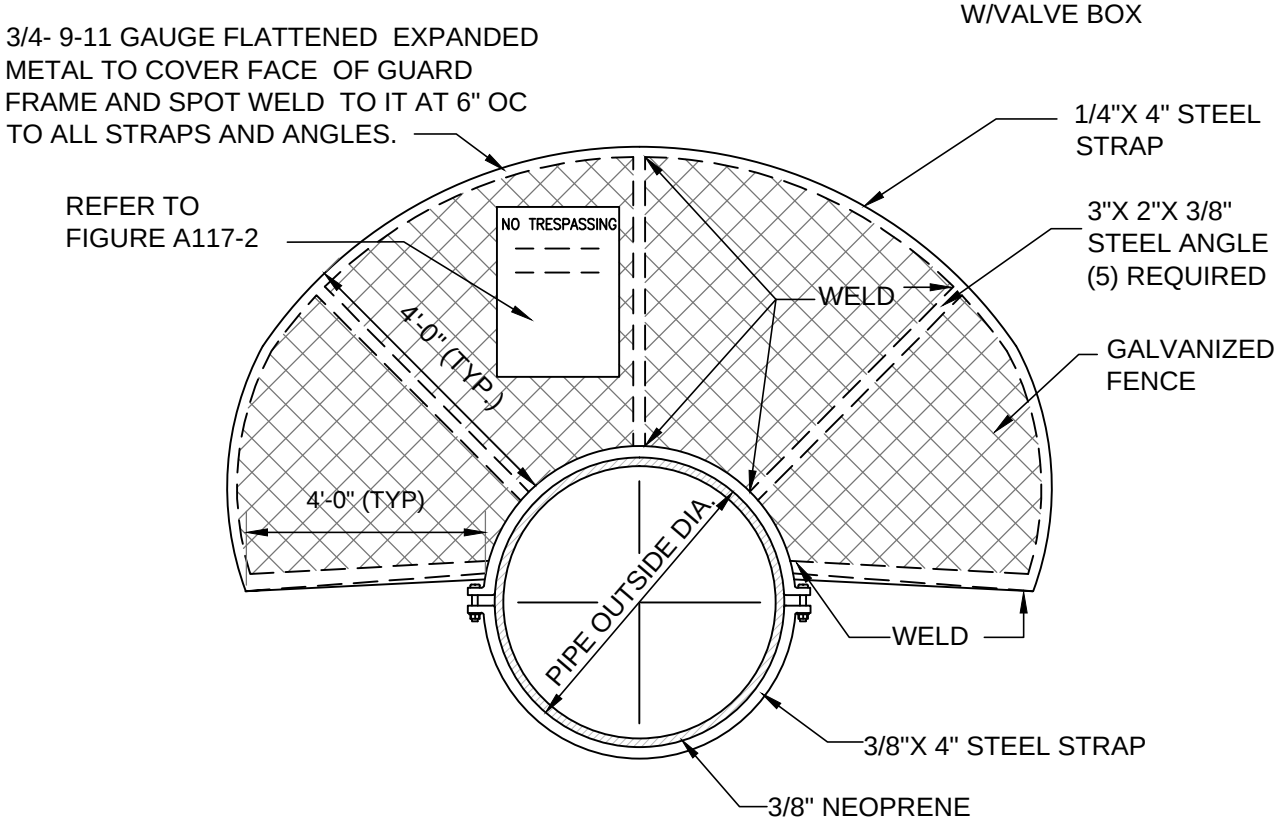

ACCESS BARRIER

NOTES:

1. ENTIRE GUARD ASSEMBLY TO BE DIPPED GALVANIZED AFTER FABRICATION, PAINTING IS NOT PERMITTED.
2. CENTER ANGLES ON 4" STEEL STRAP.
3. PILINGS ARE TO BE DESIGNED, SIGNED AND SEALED BY AN APPROPRIATELY QUALIFIED STRUCTURAL/GEOTECHNICAL ENGINEER.
4. ALL JOINTS SHALL BE RESTRAINED.

AERIAL CROSSING AND ACCESS BARRIER (TYPICAL) **POTABLE WATER AND RECLAIMED WATER MAINS**	**FIGURE** **GR-17-1**
POLK COUNTY UTILITIES, FLORIDA	**DECEMBER, 2010**

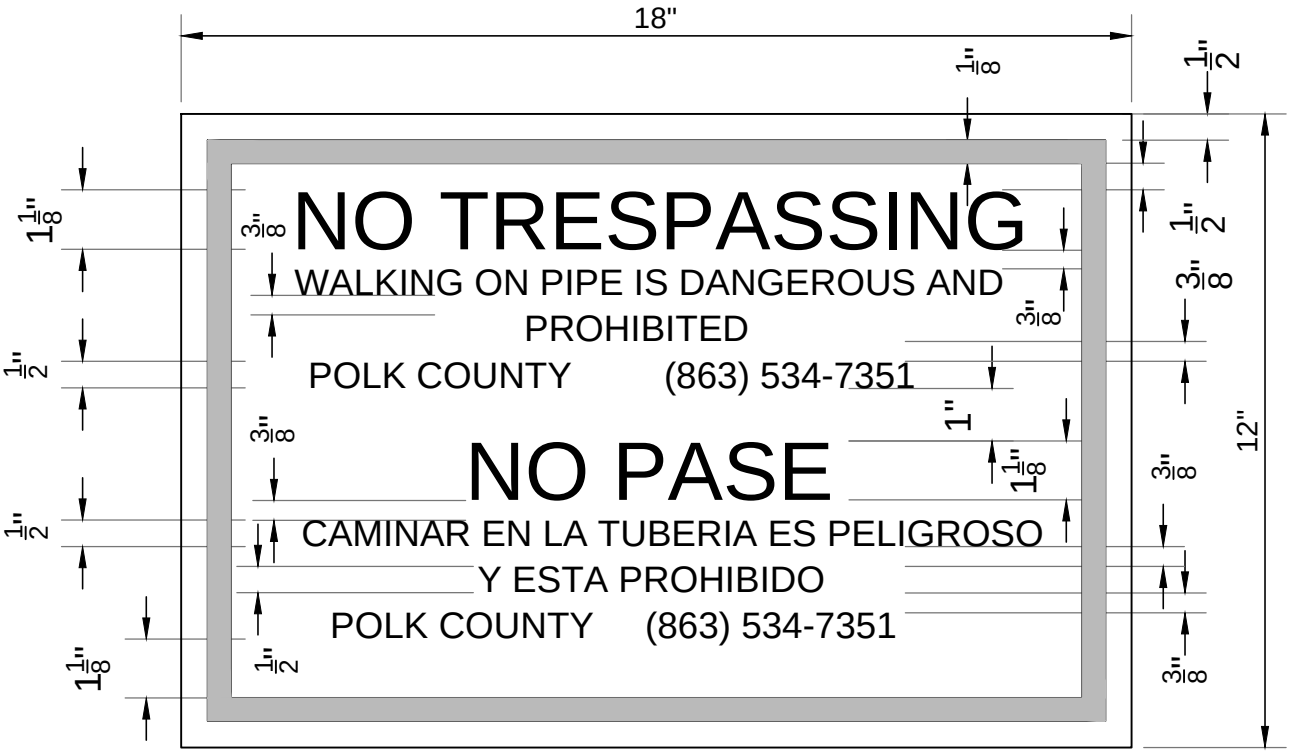

SIGN FOR AERIAL CROSSING AND ACCESS BARRIER POTABLE WATER AND RECLAIMED WATER MAINS	FIGURE GR-17-2
POLK COUNTY UTILITIES, FLORIDA	DECEMBER, 2010

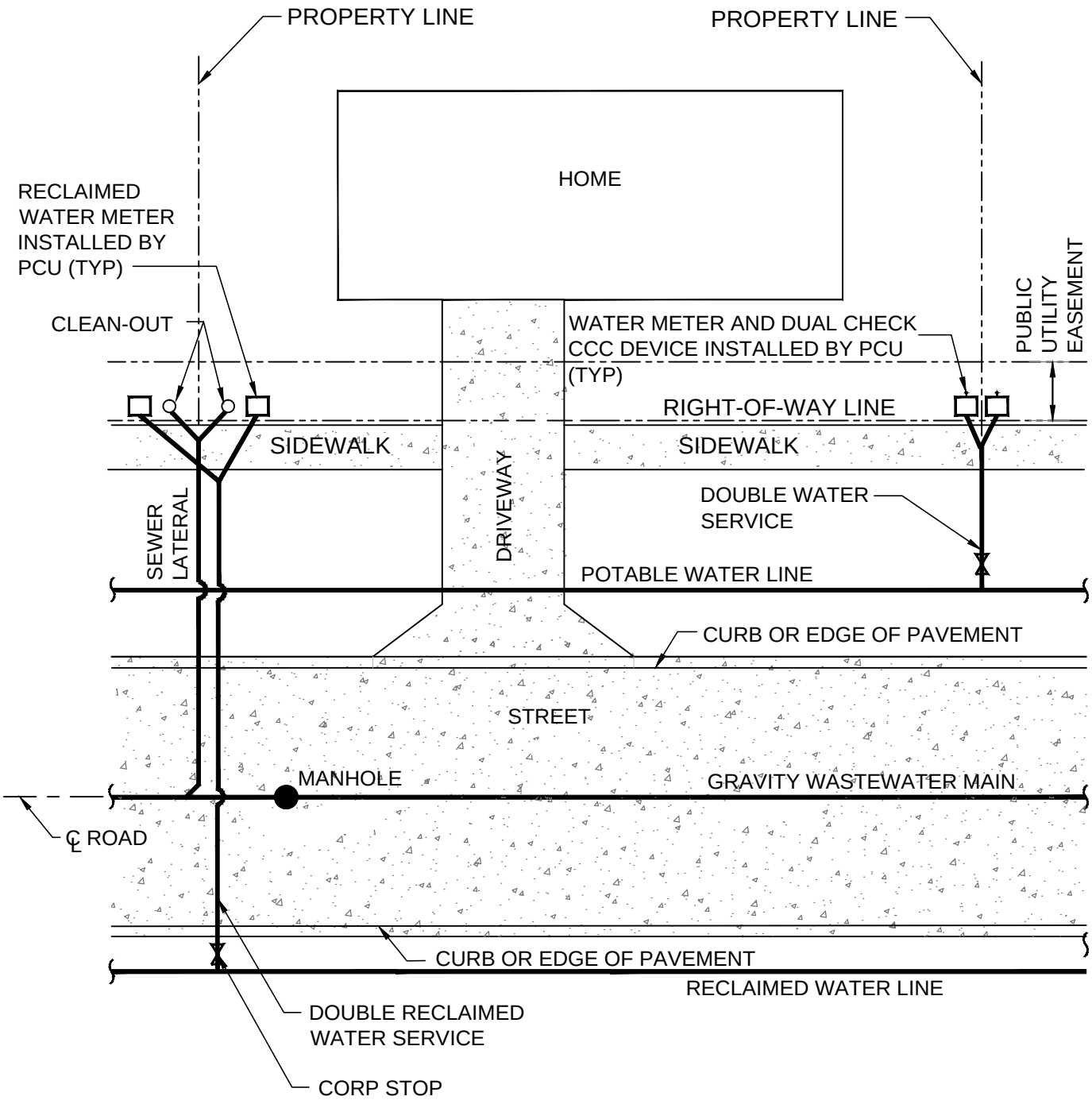

NOTES :

1. SERVICE, CORP STOPS, METER BOXES AND CURB STOPS SHALL BE INSTALLED BY THE CONTRACTOR.

RESIDENTIAL SERVICE LOCATIONS (TYPICAL)	FIGURE GR-18
POLK COUNTY UTILITIES, FLORIDA	DECEMBER, 2010

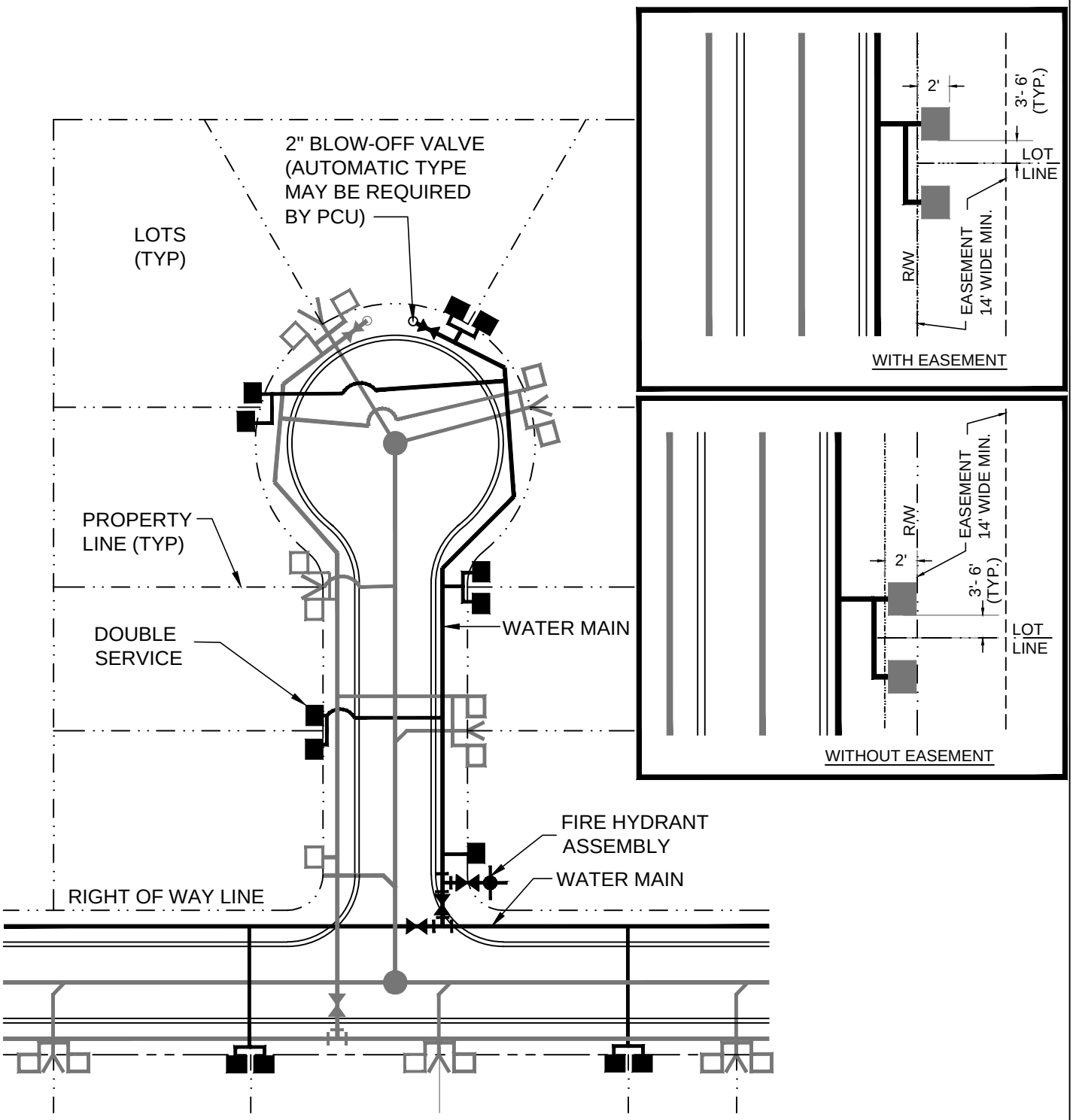

NOTE:

1. CONTRACTOR SHALL LOCATE CURB STOP BY PLACING A 2" X 2" STAKE 24" ABOVE THE GROUND. THE TOP OF THE STAKE SHALL BE PAINTED WITH THE COLOR OF THE UTILITY SERVICE PROVIDED AND LABELED WITH THE LOT NUMBERS IT SERVES.
2. LOCATION OF METER SHALL BE ADJUSTED IN ACCORDANCE WITH FIGURE GR-18 WHERE PUBLIC UTILITY EASEMENTS DO NOT EXIST PARALLEL TO THE RIGHT OF WAY.

SINGLE FAMILY RESIDENTIAL UTILITY PLAN (TYPICAL) POTABLE WATER	**FIGURE GR-19-1**
POLK COUNTY UTILITIES, FLORIDA	**DECEMBER, 2010**

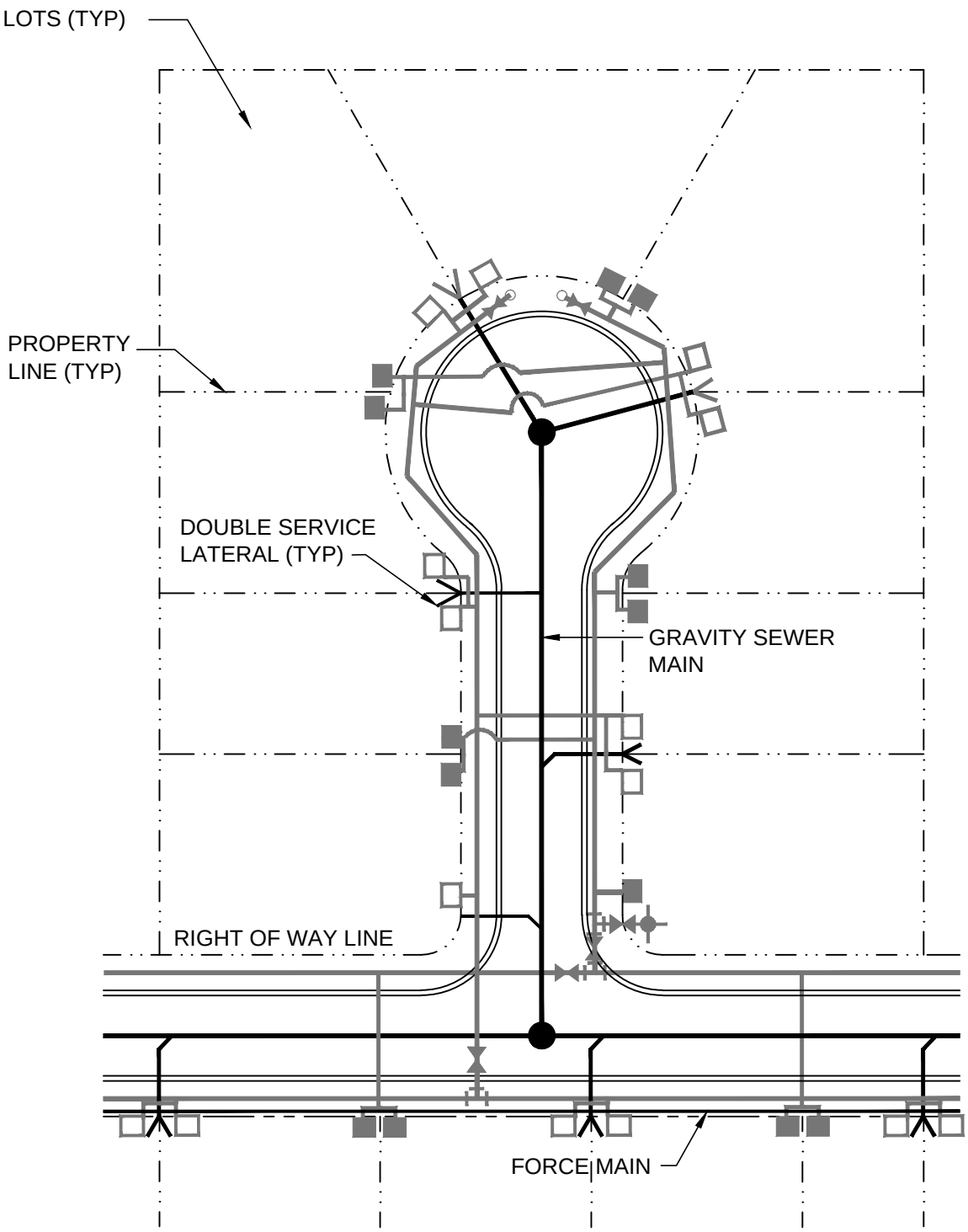

NOTE:

1. CONTRACTOR SHALL LOCATE CLEAN OUTS BY PLACING A 2" X 2" STAKE 24" ABOVE THE GROUND. THE TOP OF THE STAKE SHALL BE PAINTED WITH THE COLOR OF THE UTILITY SERVICE PROVIDED AND LABELED WITH THE LOT NUMBERS IT SERVES.

SINGLE FAMILY RESIDENTIAL UTILITY PLAN (TYPICAL) WASTEWATER	FIGURE GR-19-2
POLK COUNTY UTILITIES, FLORIDA	DECEMBER, 2010

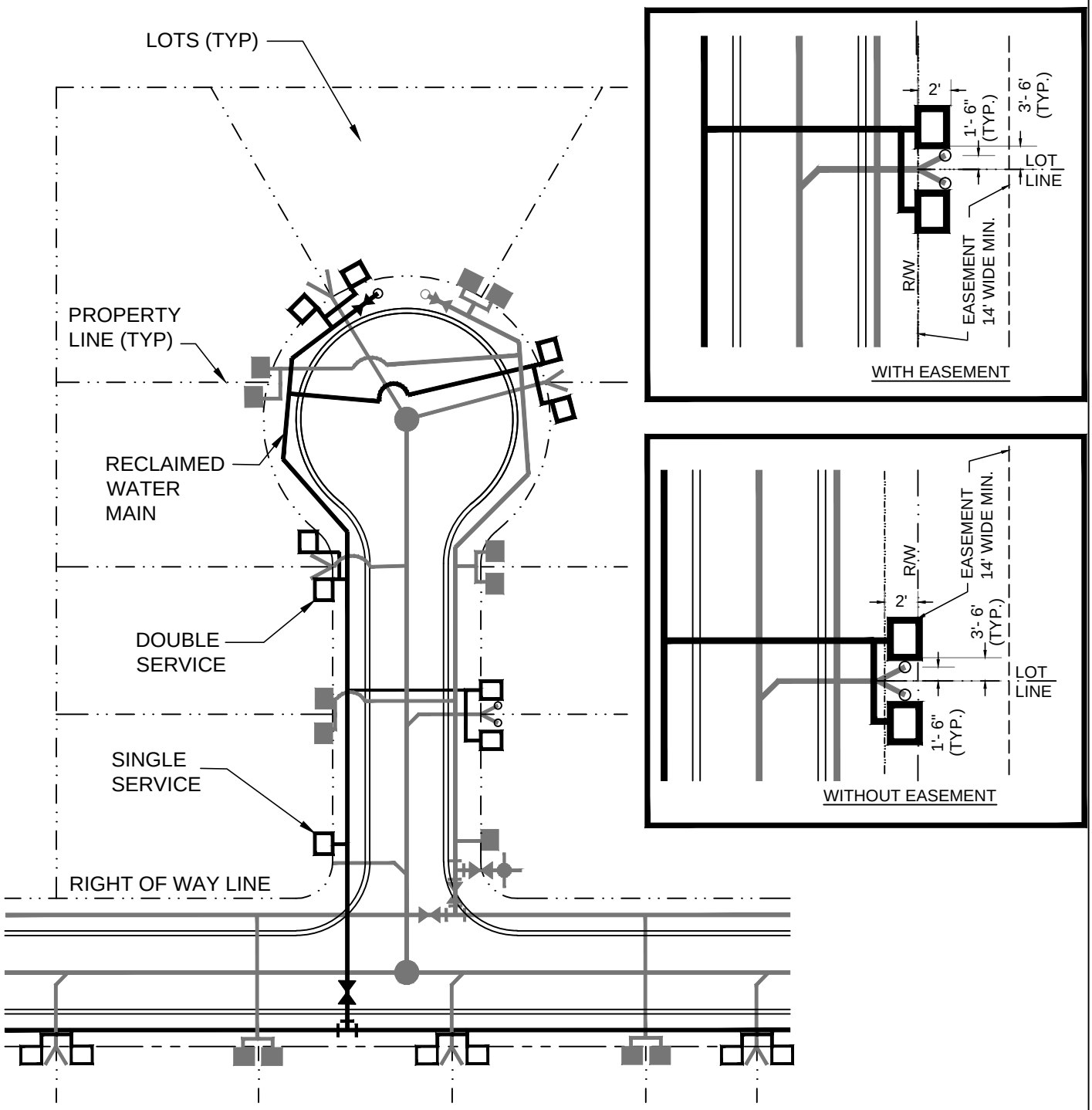

NOTE:

1. CONTRACTOR TO LOCATE CURB STOP BY PLACING A 2" X 2" STAKE 24" ABOVE THE GROUND. THE TOP OF THE STAKE SHALL BE PAINTED WITH THE COLOR OF THE UTILITY SERVICE PROVIDED AND LABELED WITH THE LOT NUMBERS IT SERVES.
2. LOCATION OF METER SHALL BE ADJUSTED IN ACCORDANCE WITH FIGURE GR-18 WHERE PUBLIC UTILITY EASEMENTS DO NOT EXIST PARALLEL TO THE RIGHT OF WAY.

SINGLE FAMILY RESIDENTIAL UTILITY PLAN (TYPICAL) RECLAIMED WATER	**FIGURE GR-19-3**
POLK COUNTY UTILITIES, FLORIDA	**DECEMBER, 2010**

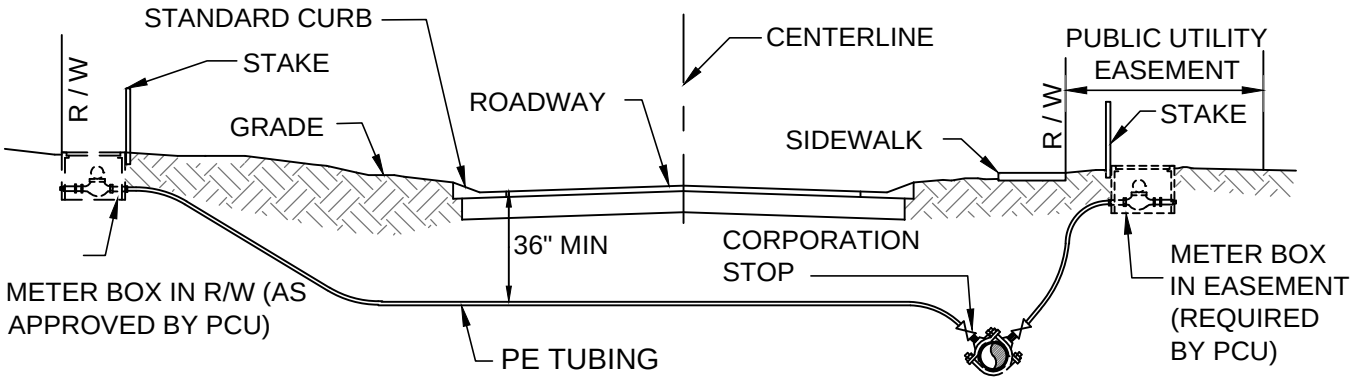

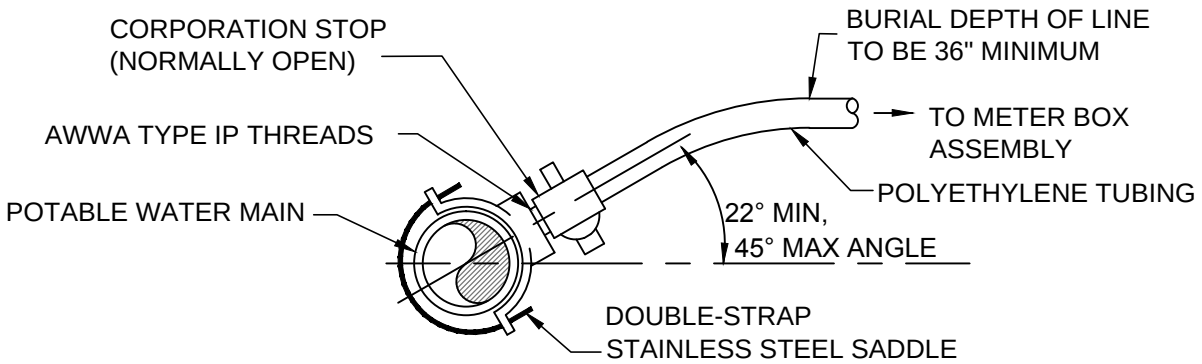

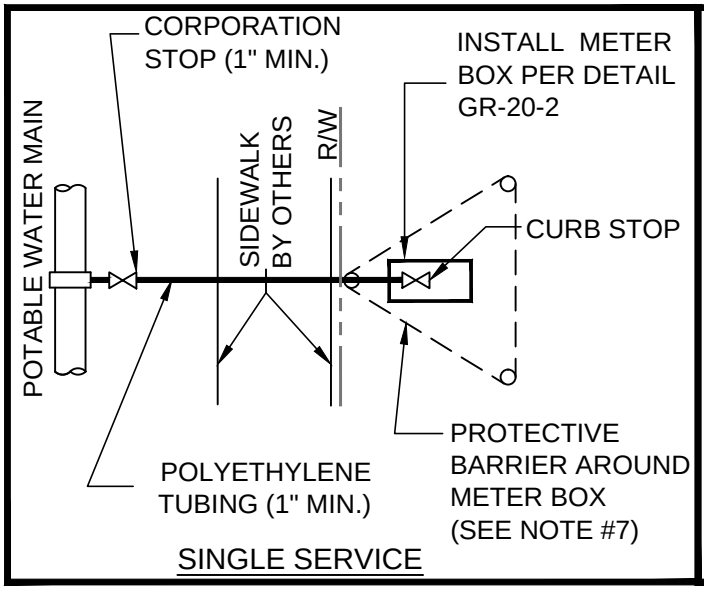

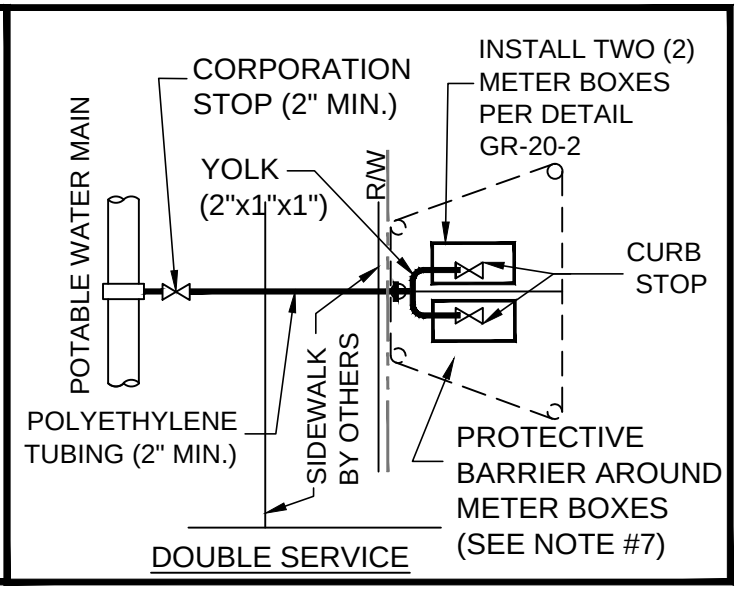

NOTES:

1. DRAWING NOT TO SCALE.
2. METER BOXES FURNISHED BY CONTRACTOR IN ACCORDANCE WITH FIGURE GR-20-2.
3. SEPARATION BETWEEN CURB AND METER BOX AND BETWEEN METER BOX AND SIDEWALK SHALL BE 12 INCHES MINIMUM WITH A 18 INCHES MAXIMUM.
4. CONTRACTOR TO LOCATE CURB STOP BY PLACING A STAKE (2" X 2" AT 24" ABOVE GROUND) TOP PAINTED WITH THE COLOR OF THE UTILITY SERVICE AND WITH THE LOT NUMBERS IT SERVES.
5. ALL FITTINGS SHALL BE BRASS WITH COMPRESSION/PACK JOINT CONNECTIONS.
6. NO SERVICE LINE SHALL CONNECT OR TERMINATE UNDER A DRIVEWAY.
7. PROTECTIVE BARRIER TO BE 3-2x4 or 2" POLES w/ WITH RED CONSTRUCTION WARNING FENCE OR TAPE.
8. TUBING SHALL BE BLUE FOR POTABLE WATER AND PURPLE PANTONE 522C FOR RECLAIMED WATER IN COLOR.
9. CONTRACTOR TO INSTALL SERVICE LINE, METER BOX, AND TERMINATE LINE IN BOX WITH CURB STOP EQUIPPED WITH TEMP PLASTIC PLUG AT END.

POTABLE WATER AND RECLAIMED WATER SERVICES (TYPICAL)	**FIGURE GR-20-1**
POLK COUNTY UTILITIES, FLORIDA	**DECEMBER, 2010**

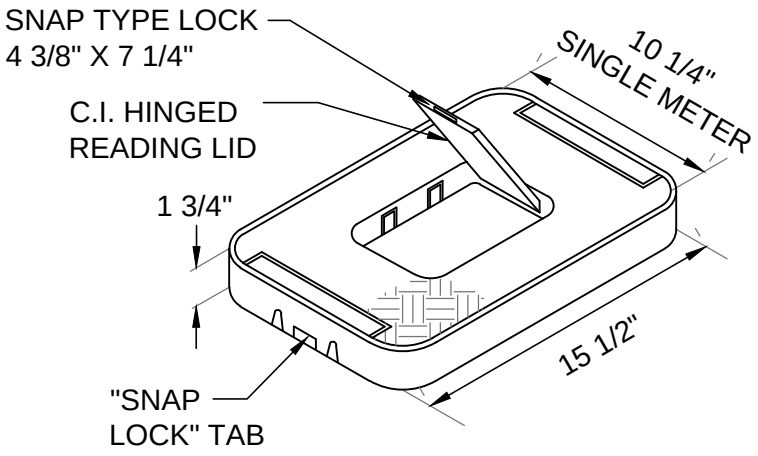

COVER LID w/ HINGED
CAST IRON LID

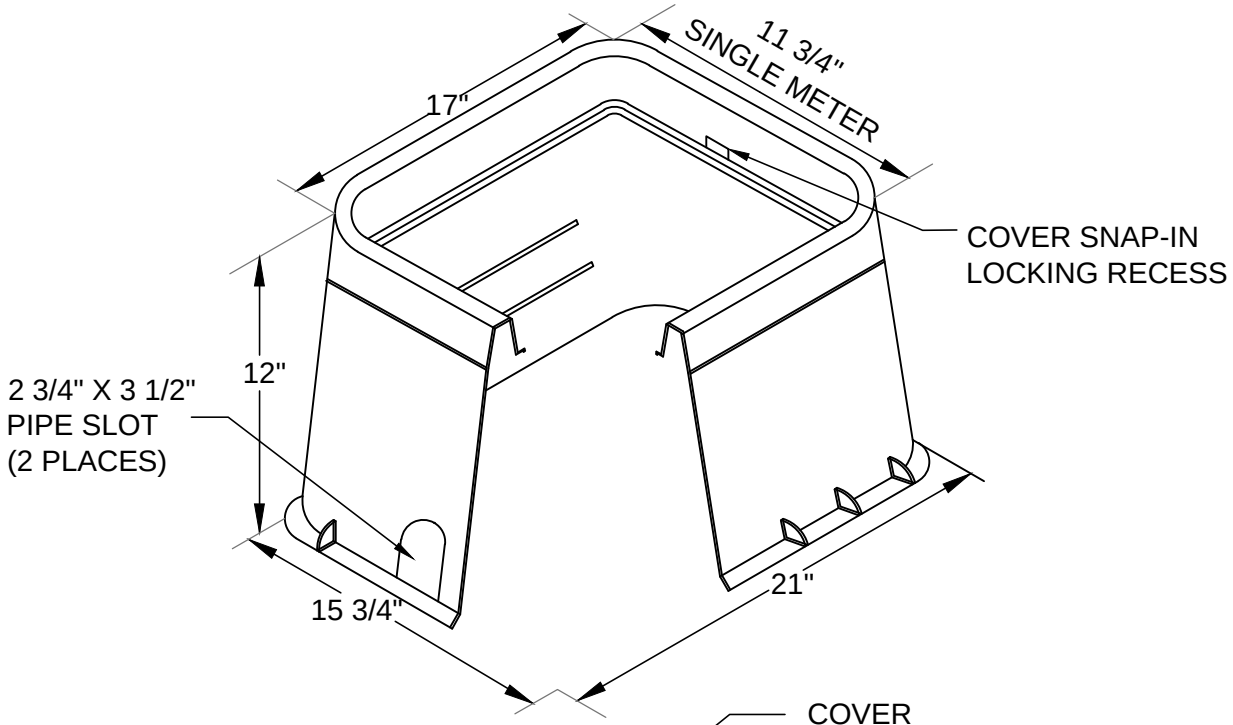

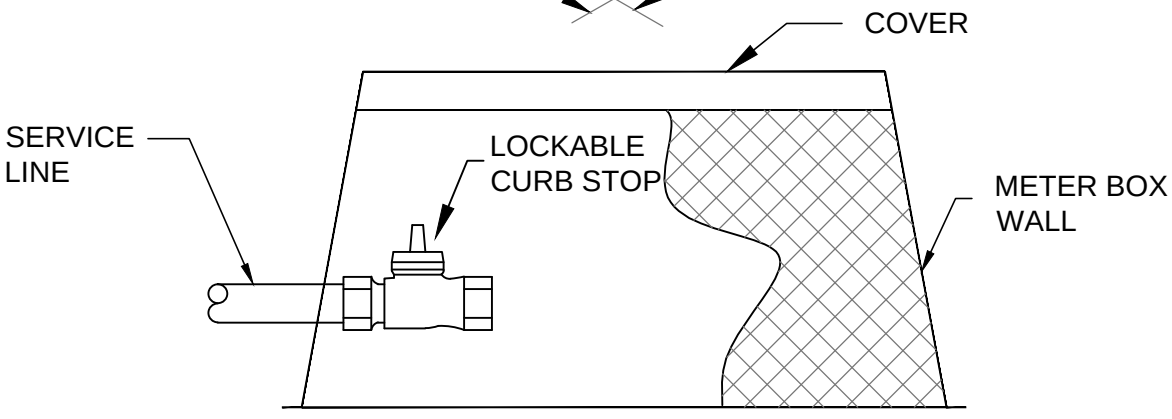

PROFILE

NOTES:

1. METER BOXES AND LIDS SHALL BE BLACK FOR POTABLE WATER AND PURPLE FOR RECLAIMED WATER.
2. THE WORDS "RECLAIMED WATER" AND THE FOLLOWING WORDS " DO NOT DRINK" AND "NO BEBER" SHALL BE CLEARLY MOLDED ON THE TOP OF EACH RECLAIMED WATER LID ALONG WITH THE STANDARD INTERNATIONAL SYMBOL " DO NOT DRINK ".
3. ALL MATERIALS SHALL BE IN ACCORDANCE WITH APPROVED MATERIAL CHECKLIST .

STANDARD RECTANGULAR METER BOX ASSEMBLY POTABLE WATER AND RECLAIMED WATER	**FIGURE GR-20-2**
POLK COUNTY UTILITIES, FLORIDA	**DECEMBER, 2010**

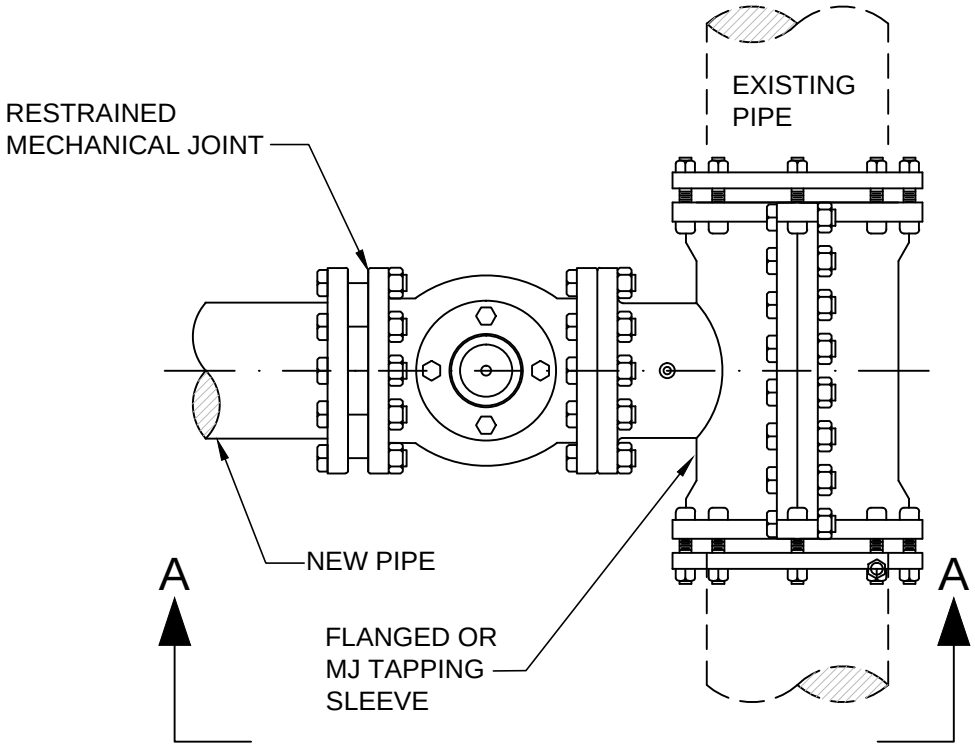

PLAN

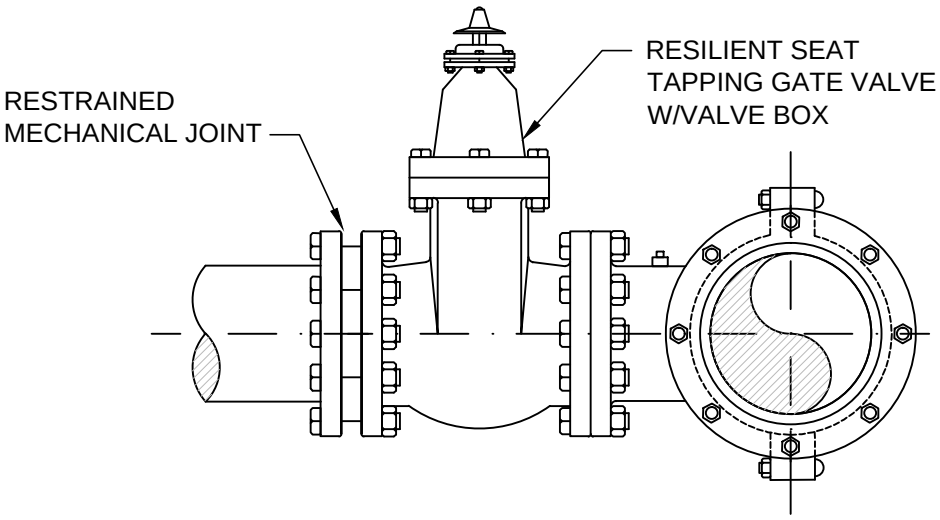

SECTION A - A

NOTES:

1. TAPPING VALVE SHALL BE PLACED IN AN UPRIGHT POSITION AND USED AS THE ISOLATION VALVE UNLESS FIELD CONDITIONS REQUIRE THE TAPPING VALVE TO BE LAID HORIZONTAL IN A PERMANENT OPEN POSITION AND THE ISOLATION VALVE LOCATED NEARBY.

MJ TAPPING SLEEVE AND GATE VALVE ASSEMBLY (TYPICAL)	**FIGURE GR-21**
POLK COUNTY UTILITIES, FLORIDA	**DECEMBER, 2010**

GENERAL NOTES:

1. THE CONTRACTOR SHALL EXERCISE EXTREME CAUTION WHEN EXCAVATING IN PROXIMITY OF WATER MAINS, WASTEWATER FORCE MAINS, GRAVITY MAINS AND RECLAIMED WATER MAINS. MAIN LOCATIONS SHOWN ON PLANS ARE NOT EXACT OR GUARANTEED. CONTRACTOR IS RESPONSIBLE FOR FIELD VERIFYING EXISTING UTILITY LOCATIONS.

2. THE PCU BASE-1 DISPATCH OPERATOR (863-534-7351) SHALL BE NOTIFIED BY THE CONTRACTOR FOR PIPE EMERGENCIES.

3. MAKE TEMPORARY CONNECTIONS TO AN EXISTING POTABLE WATER SOURCE; FLUSH OUT NEW WATER MAIN WITH POTABLE WATER (USE "JUMPER" ASSEMBLY WITH A CROSS CONNECTION CONTROL ASSEMBLY TO MAKE TEMPORARY CONNECTIONS TO AN EXISTING WATER SOURCE).

4. ALL EXISTING WATER, FORCE, GRAVITY AND RECLAIMED WATER MAINS AND OTHER FACILITIES WITHIN THE LIMITS OF THE PROJECT SHALL BE SUPPORTED AND PROTECTED AGAINST DAMAGE DURING CONSTRUCTION.

5. ALL EXISTING AND NEW PCU VALVES, VALVE BOXES, ARV'S, FIRE HYDRANTS AND MANHOLES SHALL BE PROTECTED AND ADJUSTED TO FINISHED GRADE AS SHOWN ON THE DRAWINGS. ALL EXISTING ABOVE GROUND VALVES SHALL BE RELOCATED, AS REQUIRED.

6. PCU SHALL BE NOTIFIED AT LEAST FIVE (5) DAYS PRIOR TO ANY CONSTRUCTION ACTIVITY WITHIN PROXIMITY OF ITS FACILITIES.

7. THE CONTRACTOR SHALL IMMEDIATELY CONTACT PCU AND REPAIR ALL DAMAGES TO PCU'S MAINS AND FACILITIES AT THE CONTRACTOR'S EXPENSE. IF THE REPAIR IS NOT MADE IN A TIMELY MANNER, AS DETERMINED BY PCU, PCU MAY PERFORM REQUIRED REPAIRS AND CLEANUP. THE CONTRACTOR WILL BE CHARGED FOR ALL EXPENSES ASSOCIATED WITH THE REPAIR.

8. ONLY PCU STAFF SHALL OPERATE WATER, WASTEWATER, AND RECLAIMED WATER VALVES. THE CONTRACTOR SHALL COORDINATE VALVE OPERATION WITH THE PCU INSPECTOR.

9. THE CONTRACTOR SHALL COORDINATE ALL LIFT STATION OPERATION AND SHUT DOWN CONTROL WITH THE PCU INSPECTOR. THE CONTRACTOR SHALL PROVIDE FOR BYPASSING AND/OR HAULING OF WASTEWATER DURING THE INTERRUPTION OF FLOWS AND CONNECTIONS WITH EXISTING WASTEWATER SYSTEMS.

10 ALL NEW VALVES BEING INSTALLED SHALL REMAIN CLOSED DURING CONSTRUCTION. KEEP VALVES ON ALL WET TAPS CLOSED UNTIL CLEARED BY FDEP/FDOH.

11 THE UTILITY IMPROVEMENTS AND ADJUSTMENTS SHOWN ON THESE PLANS ARE INTENDED TO MAINTAIN THE INTEGRITY OF THE PCU WATER, WASTEWATER AND RECLAIMED WATER SYSTEMS. ALL MATERIALS AND CONSTRUCTION SHALL BE IN ACCORDANCE WITH THE UTILITIES STANDARDS AND SPECIFICATIONS MANUAL. THE PLANS DO NOT INCLUDE WORK PERFORMED ON OR FOR UTILITY SYSTEMS OWNED BY OTHERS, UNLESS STATED OTHERWISE ON THE PLANS.

12 DO NOT OPEN ANY VALVES THAT DIRECTLY CONNECTS ANY PROPOSED WATER MAINS TO ANY EXISTING MAINS UNLESS CLEARED BY BOTH FDEP/FDOH & PCU.

13 DURABLE COLORED PLASTIC CURB MARKERS, AS SPECIFIED WITHIN THE APPROPRIATE APPROVED MATERIALS CHECKLIST AND THE APPROPRIATE SECTIONS OF THE MANUAL, SHALL BE SECURELY ATTACHED 6 INCHES FROM THE TOP OF CURB, OR 6 INCHES FROM THE EDGE OF PAVEMENT WHERE CURBING IS NOT PRESENT, IN ACCORDANCE WITH THE MANUFACTURER'S RECOMMENDATIONS SO THAT ALL SERVICES AND VALVES ARE ACCURATELY LOCATED.

GENERAL NOTES	**FIGURE GR-22**
POLK COUNTY UTILITIES, FLORIDA	**DECEMBER, 2010**

THIS PAGE IS INTENTIONALLY BLANK

SWAB / PIG LAUNCHER PORT (TYPICAL)

POLK COUNTY UTILITIES, FLORIDA

FIGURE GR-24

DECEMBER, 2010

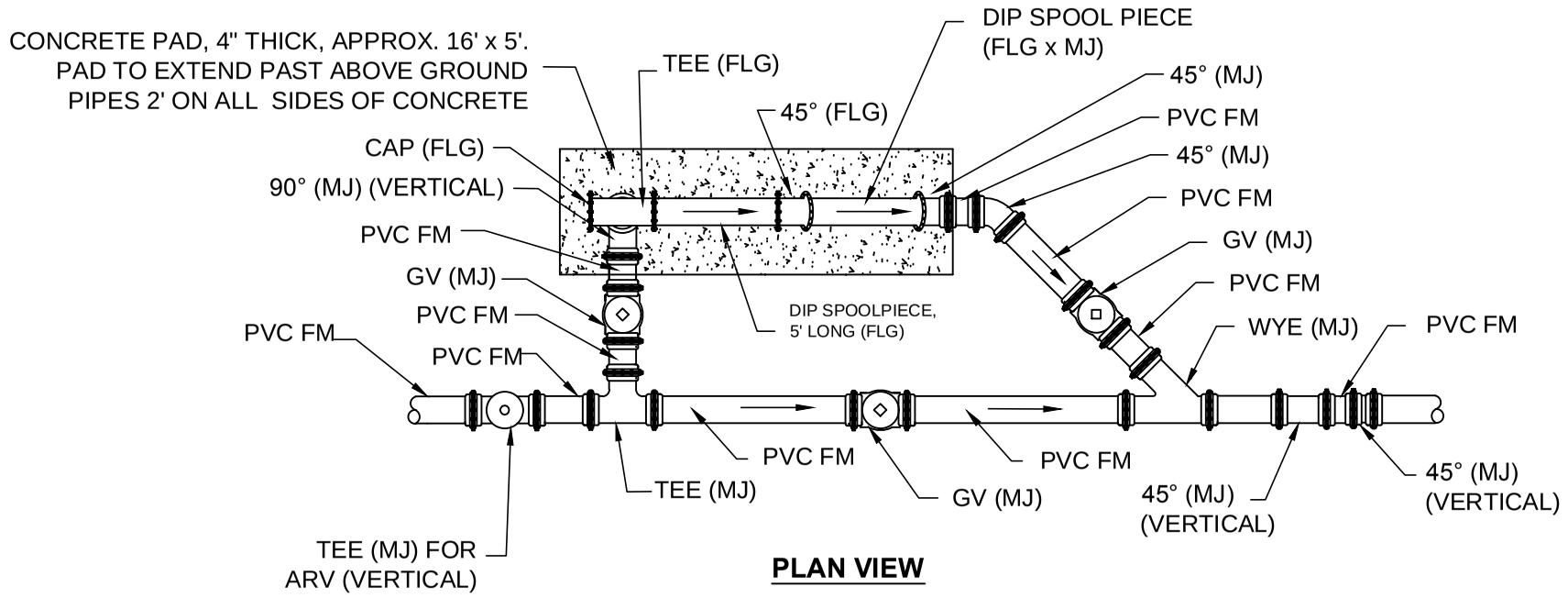

PLAN VIEW

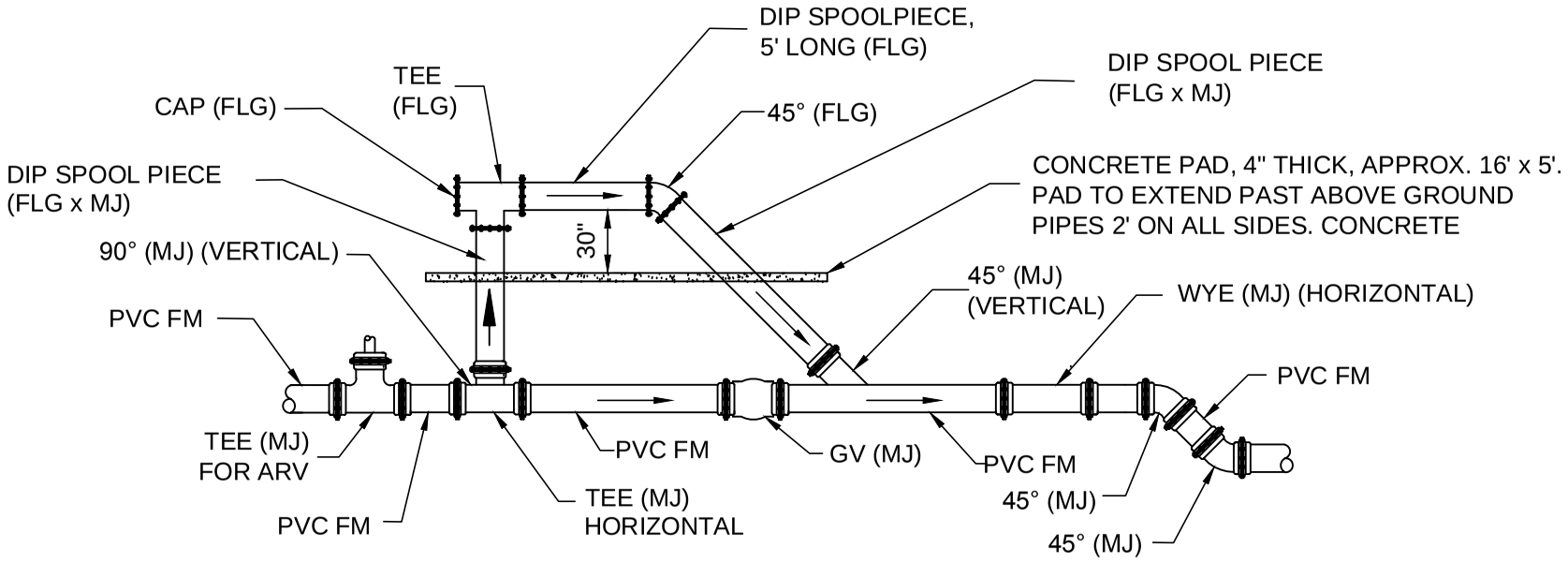

PROFILE / ELEVATION VIEW

PIG / SWAB RECEIVING PORT (TYPICAL)

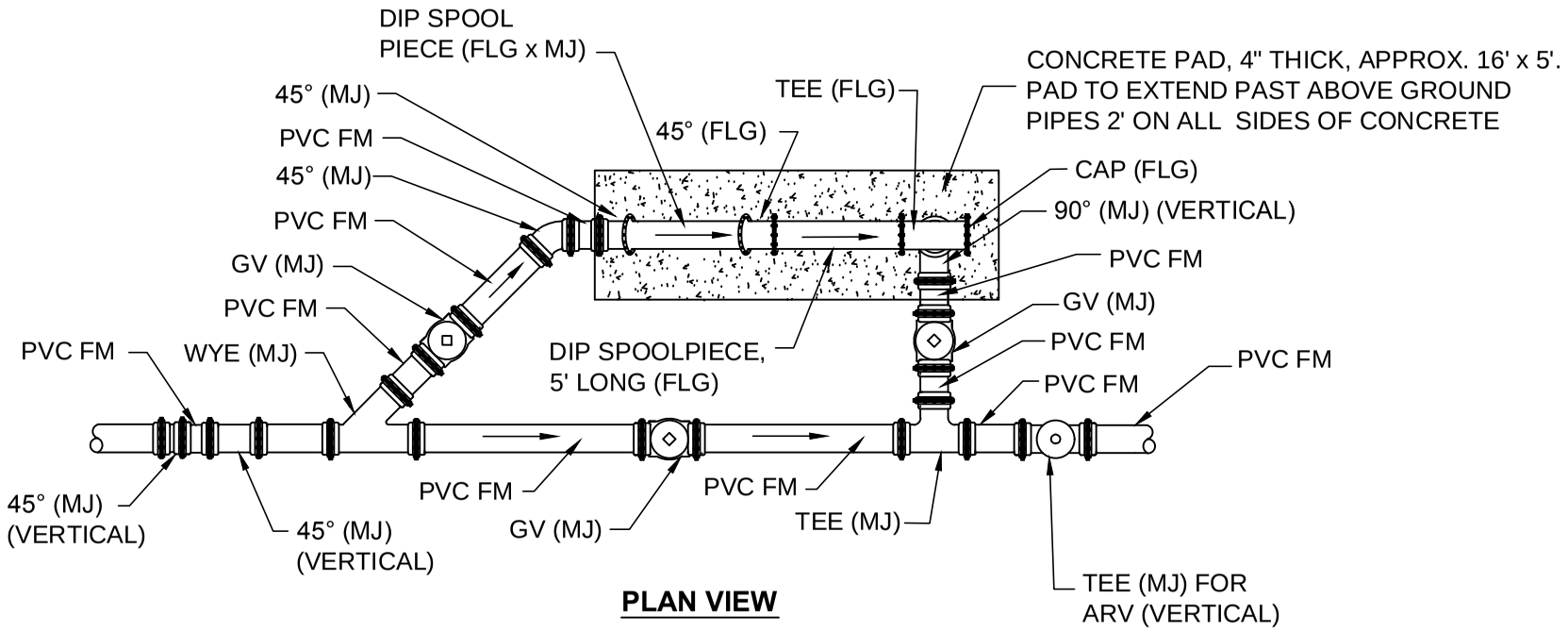

PLAN VIEW

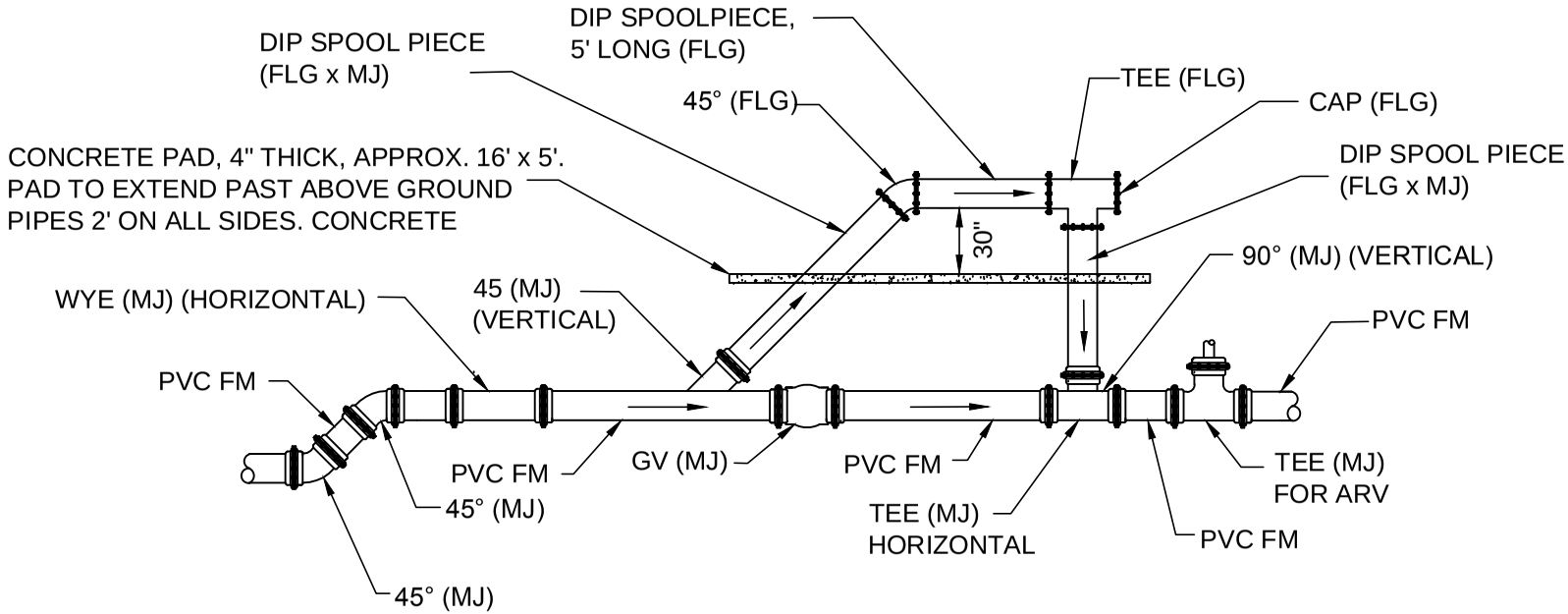

PROFILE / ELEVATION VIEW

POLK COUNTY UTILITIES, FLORIDA

FIGURE GR-25

DECEMBER, 2010

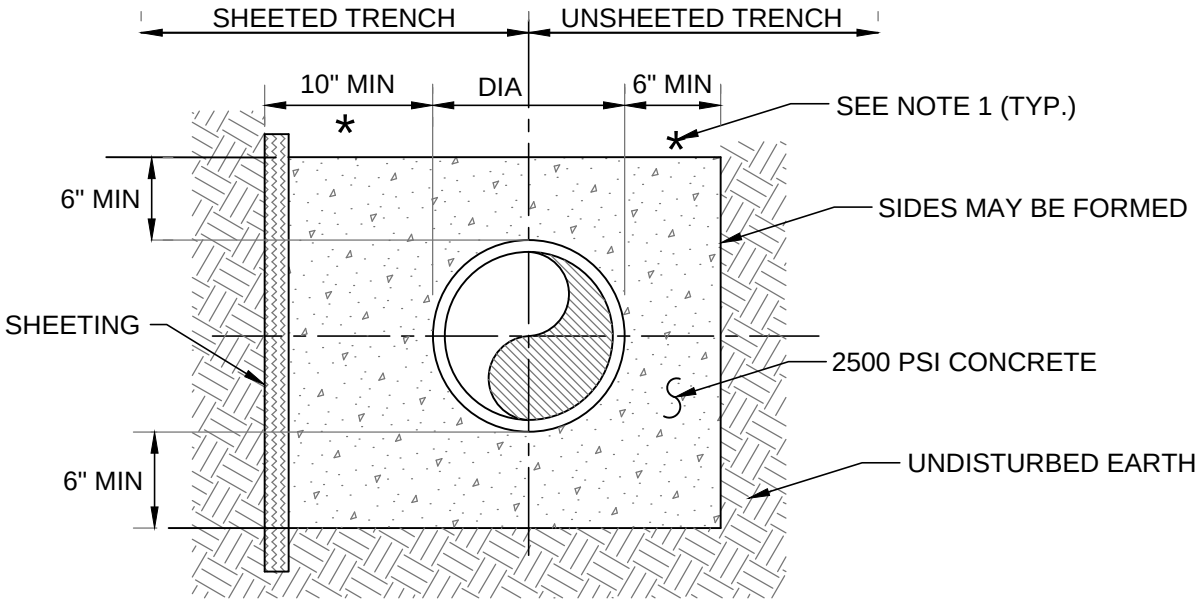

FULL ENCASEMENT

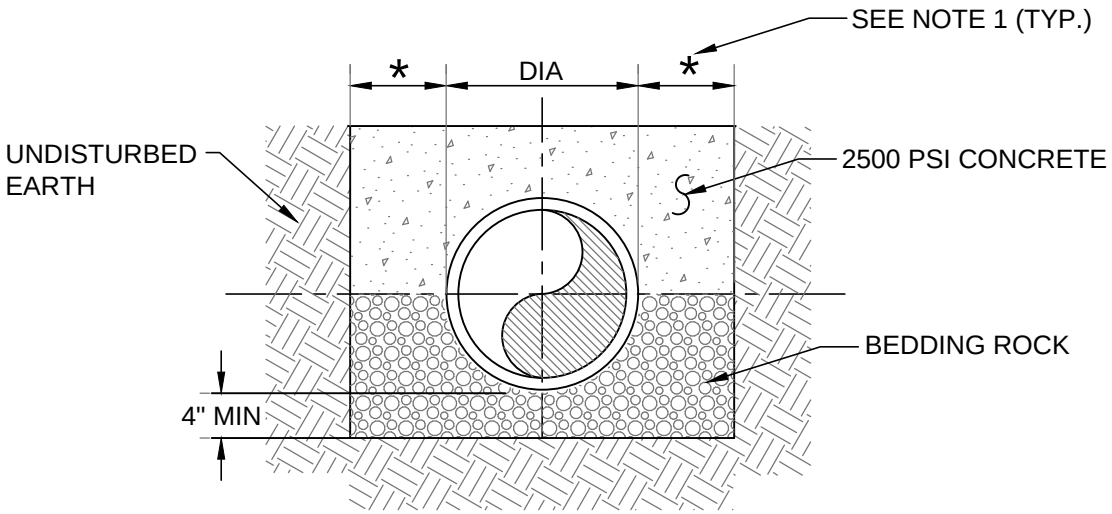

CONCRETE ARCH

NOTES:

1. 15" MAXIMUM FOR PIPE DIAMETER LESS THAN 24", AND 24" MAXIMUM FOR PIPE DIA. 24" AND OVER.

2. USE OF CONCRETE ARCH HALF ENCASEMENT OR FULL ENCASEMENT TO BE DETERMINED BY ENGINEER.

3. REFER TO THE UTILITIES STANDARDS AND SPECIFICATIONS MANUAL FOR SHEETING AND BRACING EXCAVATIONS. ALL SHEETING AND BRACING SHALL CONFORM TO OSHA AND STATE REQUIREMENTS.

CONCRETE ARCH AND FULL ENCASEMENT	**FIGURE GR-26**
POLK COUNTY UTILITIES, FLORIDA	**DECEMBER, 2010**

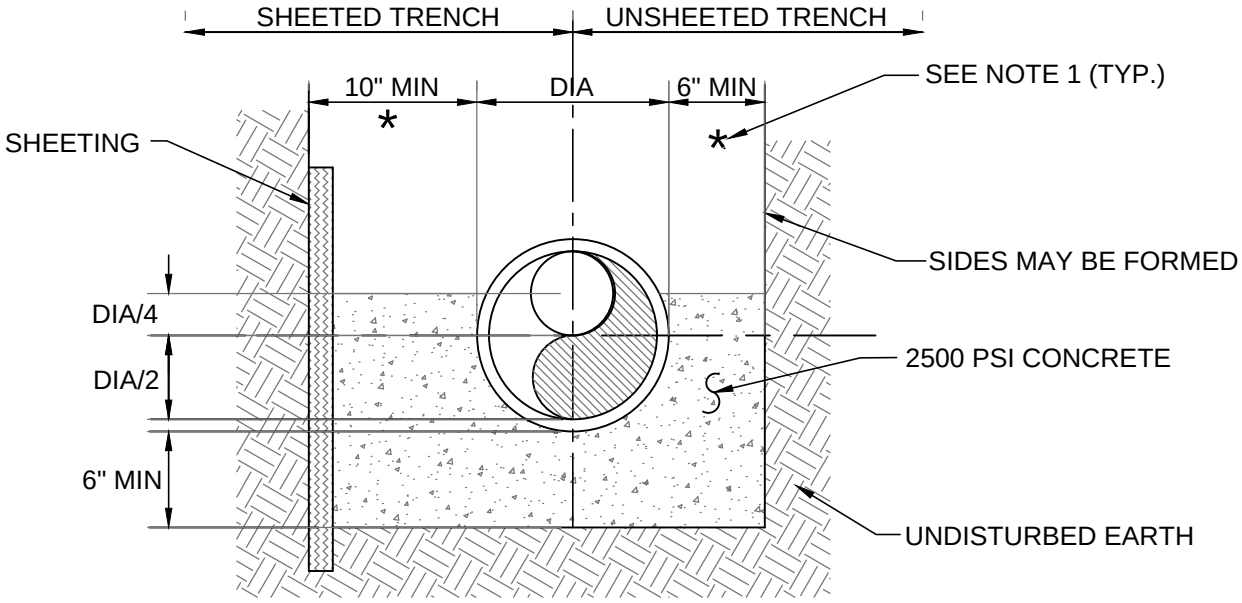

CRADLE OR HALF ENCASEMENT

NOTES:

1. 15" MAXIMUM FOR PIPE DIAMETER LESS THAN 24", AND 24" MAXIMUM FOR PIPE DIA. 24" AND OVER.

2. USE OF CONCRETE CRADLE OR HALF ENCASEMENT TO BE DETERMINED BY ENGINEER.

3. REFER TO THE UTILITIES STANDARDS AND SPECIFICATIONS MANUAL FOR SHEETING AND BRACING EXCAVATIONS. ALL SHEETING AND BRACING SHALL CONFORM TO OSHA AND STATE REQUIREMENTS.

CONCRETE CRADLE OR HALF ENCASEMENT	**FIGURE GR-27**
POLK COUNTY UTILITIES, FLORIDA	**DECEMBER, 2010**

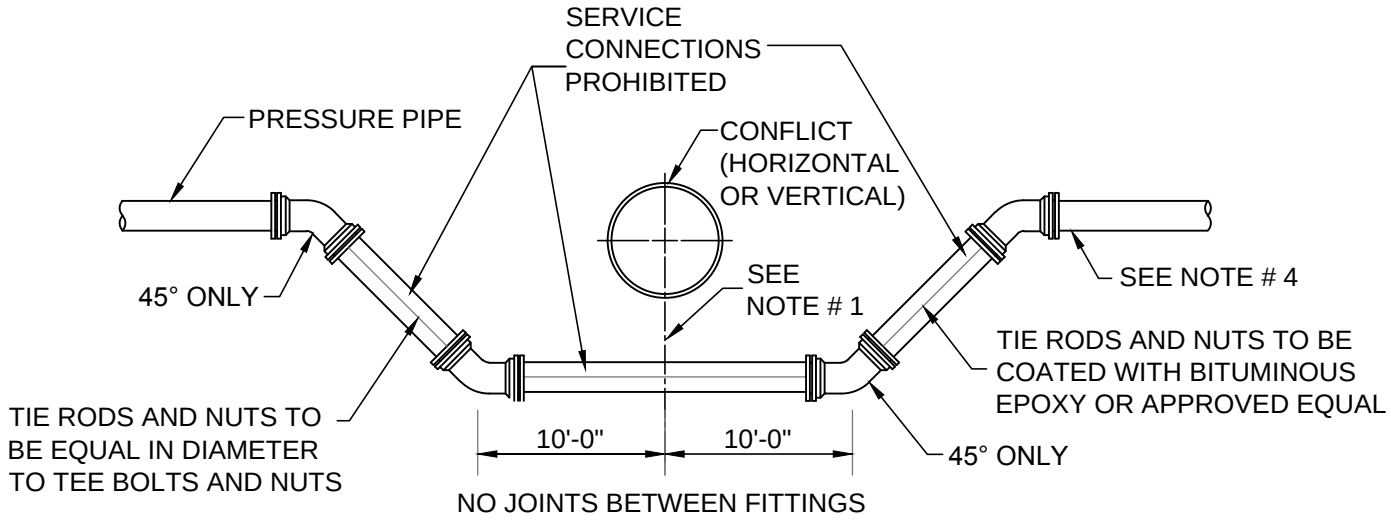

FITTING TYPE

(PVC OR DI PIPE)

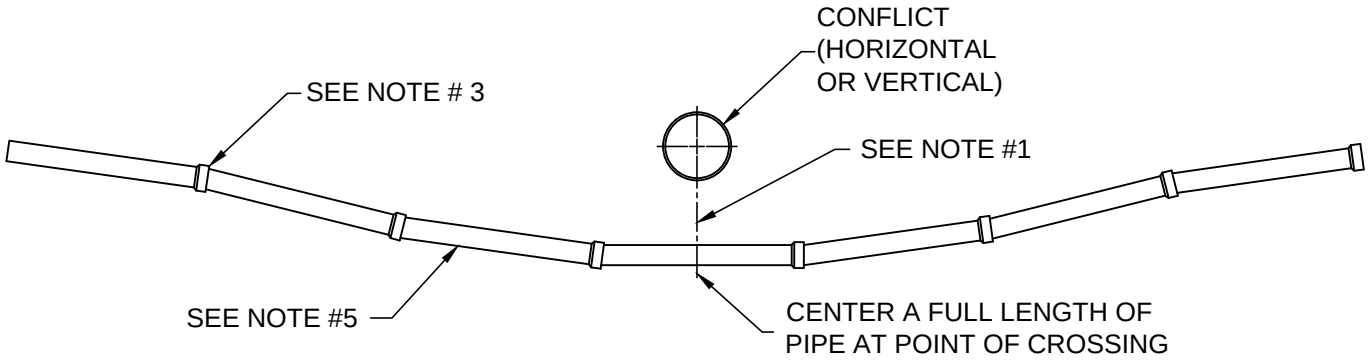

DEFLECTION TYPE

(DI PIPE ONLY)

NOTES:

1. FOR SEPARATION, REFER TO FIGURE GR-16.

2. ALL FITTINGS SHALL BE PROVIDED WITH APPROVED MECHANICAL JOINT RESTRAINT.

3. MAXIMUM DEFLECTIONS AND LAYING RADIUS SHALL NOT EXCEED THE PIPE MANUFACTURER'S RECOMMENDATIONS.

4. PIPE SHALL BE RESTRAINED FROM EACH TOP DEFLECTION IN ACCORDANCE WITH FIGURE GR-04.

5. NO SERVICES SHALL BE MADE TO ANY PORTION OF A DEFLECTED PIPE DEEPER THAN 6.0'.

DEFLECTION OF PRESSURE MAINS	**FIGURE GR-28**
POLK COUNTY UTILITIES, FLORIDA	**DECEMBER, 2010**

CHAPTER 4 WATER

Section 410 Potable Water Main Standards and Specifications December 2010

PART 1 – GENERAL

A. Potable water mains shall be designed for the estimated tributary population, as delineated in the approved PCU's MASTER PLAN (latest edition) for the subject RUSA. When the DEVELOPER's potable water MASTER PLANS are required, potable water mains shall be designed for the estimated ultimate build out, as approved by PCU. The DEVELOPER shall be required to satisfy the domestic water and fire protection design flow for their planned development (PD) or the development of regional impact (DRI).

PART 2 - LOCATION

A. Mains shall be located within dedicated public rights-of-way or Polk County Utilities Easements.

1. Public Rights-of-Way

   When installed in rights-of-way, mains shall maintain a consistent alignment with respect to the centerline of the road. In all cases, mains shall be installed along one side of the road with crossings kept to a minimum.

2. Polk County Utilities Easements

   If a main is to be constructed within an easement, the centerline of the pipe shall be located along the centerline of the easement.

   a. When not adjacent to County or State rights of way, a minimum width of 20 feet for mains with inverts up to 5 feet below finish grade. For mains with inverts deeper than 5 feet below finish grade, the minimum width shall be twice the invert depth of the main plus 10 feet. All widths shall be rounded up to the nearest even foot. Width of the easement shall be based on the deepest invert depth of each segment of the subject main. Variations in easement size may be authorized by the COUNTY only when deemed appropriate provided that the existing or proposed level of service is maintained and operational maintenance and responsibility is established to the benefit of the COUNTY.

   b. Where multiple parallel mains are to be placed within a single easement, the FDEP required horizontal separation distance between the mains shall be added to the above minimum single main easement width and rounded up to the nearest even foot.

   c. Have a maximum length of 150 linear feet if the easement terminates in a dead end or an obstruction. Longer easements may be authorized if adequate turnaround and work zone area is provided as based on an AASHTO single unit vehicle. All locations and lengths of easements shall take in consideration the safety and accessibility of PCU vehicles and personnel.

   d. Be free of any permanent structures, such as footers, foundations, walls, screen walls, buildings, air conditioner pads, transformer pads, sign supports, roof overhangs, stormwater structure, swimming pools, storage sheds, patios, etc.

e. Be accessible at all times and not subject to standing water nor under the side slope or bottom of a lake, pond or stormwater retention area, except that perpendicular crossings under swales, small ditches and canals may be authorized in writing by PCU.

f. As designated by PCU for existing use, a Polk County Utilities Easement of not less than 15 feet in width shall be provided parallel to and directly adjacent to all County, State, and Federal rights-of-way. Notwithstanding PCU's easement requirements stated above and herein, easements in typical subdivision construction including those adjacent to internal subdivision roads shall be sized and conveyed in accordance with the LAND DEVELOPMENT CODE. The ultimate width of easements may be based on the number, type, size and depth of the utility lines within the easement.

g. Landscape buffers may be allowed to co-exist with Polk County Utilities Easements as long as raised landscape berms are not utilized. Walls shall be allowed as long as there are no potential conflicts with future repair or replacement of a main. Should PCU disturb or damage any landscaping or other installed improvements within the easement, PCU shall initiate repairs or install replacements in a timely manner at no cost to the property owner.

h. A triangular corner clip type of Polk County Utilities Easement, that has 20 foot long sides, shall be provided at all intersections of County, State, and Federal rights-of-way.

B. Mains within easements shall not be placed under septic tanks or their drain fields, storm water management facilities, buildings, retention ponds, athletic courts, swimming pools, fountains, patios, or other structures. Privacy walls and foundations shall not be placed parallel over mains or within the structure's zone of influence as based on a soil angle of repose of 45 degrees. Mains shall not be located along interior side or rear lot lines, unless approved in writing by PCU. Placement of mains along storm water retention pond berms may be allowed by PCU on a case by case basis when placed in a casing and if such a configuration results in efficient placement and utilization of the system. Service laterals, valves, and other main related improvements shall not be placed along interior side or rear lot lines.

C. Mains may be accepted for ownership and maintenance by PCU if the private streets are designed with an urban design cross section in accordance with the LAND DEVELOPMENT CODE. Polk County Utilities Easements shall be dedicated over the entire private street rights-of-way. In addition, sufficient area must be available outside of paved areas to maintain PCU mains.

D. Mains shall be designed with uniform positive or negative slopes to avoid undulations and minimize high points and low points in the profile.

E. Offsite mains for all developments shall be extended along the entire frontage of each development. The minimum size of the main to be extended by the DEVELOPER shall be the same size that is the minimum main size required to serve the

development. In the event that PCU desires to upsize the main, PCU shall reimburse the DEVELOPER in accordance with the provisions of the Utilities Code.

F. Mains with inverts located up to 5 feet below finish grade shall not be located closer than 10 feet from any structure that requires a Certificate of Occupancy. For mains with inverts located deeper than 5 feet below finish grade, the minimum distance of 10 feet shall be increased by one foot for each one foot of increased depth of the main's invert. All horizontal distances shall be rounded up to the nearest whole foot.

G. Unless specifically determined by PCU to be of benefit to its overall system, potable water infrastructure installed within a non-residential or multi-residential development shall not be subject to ownership, maintenance, or operation by PCU.

PART 3 – DESIGN BASIS

A. Average Daily Flow and Peak Flows:

Average daily water flow shall be calculated by referencing the equivalent residential connection (ERC) flow rates as established in the "Utilities Administration Manual". Water flow rates shall be in accordance with the Peaking Factors contained in the Section entitled "Water Hydraulic Modeling Standards".

B. Fire Flow Requirements:

Fire flow requirements shall be determined in accordance with applicable COUNTY fire codes and the LAND DEVELOPMENT CODE. Where fire flow requirements exceed the anticipated available fire flow from the central water system, on-site fire protection system or other COUNTY/city fire department approved mitigation measures shall be utilized.

C. Design Calculations:

The DEVELOPER's ENGINEER shall submit signed, sealed and dated design calculations along with a compact disc copy of the WaterCad or WaterGems based model with the PLANS for all water distribution projects. Calculations shall show that the water mains will have sufficient hydraulic capacity to transport the greater of peak hourly flows or the combination of maximum daily flows and fire flows while meeting the requirements of this Section. Minor head losses shall be incorporated in calculations including losses through meters, detector checks and backflow prevention assemblies.

PART 4 - DESIGN

A. Pipe Cover:

A minimum cover of 36 inches shall be provided for all water mains.

B. Pressure:

Distribution systems shall be designed to maintain a minimum static pressure of 20 psi at all points in the system, including the supply side of each meter, under average daily flow conditions. Due to internal water demands, higher minimum pressures may be

required at commercial, industrial, and high-density residential areas. A maximum pressure of 35 psi shall be used in calculating domestic water pressure for residential structures up to 2 stories in height and all fire suppression systems. For excessive pressures, pressure-reducing provisions may be required.

C. Design Friction Losses:

Friction losses through mains shall be based on the Hazen and Williams or Darcy-Wiesbach formulas. In the use of the Hazen and Williams formula, the value for "C" shall be 130 for all pipes.

D. Design Pressure and Restraint

1. The main and fittings, including all restrained joint pipe fittings shall be designed to withstand pump operating pressures and pressure surges, but not less than 150 psi.
2. The restrained joint lengths shall be calculated consistent with the table format shown in the STANDARD DRAWINGS.
3. In the event that it is necessary to locate proposed mains or leave existing mains longitudinally under any part of a proposed roadway subject to regular non-residential traffic or with speed limits above 30 miles per hour, such mains shall have restrained joints.

E. Velocity and Diameter:

Only 4, 6, 8, 10, 12, 16, 20, 24, 30, 36, 42, 48, and 54-inch in diameter water mains shall be permitted. Variations in main size may be authorized by the COUNTY when deemed appropriate provided that the existing or proposed level of service is maintained and operational maintenance and responsibility is established to the benefit of the COUNTY. Water mains with a minimum of 6-inch diameter shall be required for use with fire hydrants. Looped systems shall be required in low-density residential developments. Where looping of mains is not practical, the diameter of dead end mains shall be increased by one pipe size as based on hydraulic modeling. In cul-de-sac situations, mains may be reduced to a minimum of 4 inches in diameter after the last fire hydrant assembly if the length of the reduced size main does not exceed 500 linear feet or will not serve more than 40 ERC's. Mains shall be sized so velocities do not exceed six feet per second under the fire flow plus max day flow condition. In no case shall connections be made to cause velocities to exceed six feet per second in existing mains.

F. Material:

1. Water mains shall be either PVC or ductile iron pipe. HDPE may be used in specific applications as specified in this MANUAL or as approved by PCU. Using the PCU approved hydraulic modeling standards contained within this MANUAL, the ENGINEER shall determine on a case by case basis if it is necessary for all proposed HDPE pipe installations to be increased by one pipe size above all proposed or existing adjacent PVC and Ductile Iron Pipe installations.

G. Fire Hydrant Assembly Location and Spacing:

1. At a minimum, specifications outlined in the latest version of LAND DEVELOPMENT CODE and applicable COUNTY fire codes shall apply. Specifically, minimum fire flow rates for individual uses shall be established by the Fire Marshall.
2. Hydrants assemblies shall be placed on the same side of the roadway as the water mains and shall be placed at 500-foot intervals in commercial, multifamily, and industrial areas. Hydrant spacing for single-family residential and other areas shall be 1,000-foot intervals.
3. Unless otherwise directed by the Fire Marshall, fire hydrant assemblies in non-residential developments shall have a minimum horizontal separation distance from a structure that is equal to the vertical distance from the finished ground elevation to the eaves of the structure.
4. If an existing fire hydrant assembly has to be relocated more than five feet longitudinally for any reason, the main shall be tapped and the existing fire hydrant assembly re-installed by the DEVELOPER. Should the existing assembly not be in good condition according to PCU or not in compliance with this MANUAL, it shall be replaced with a new fire hydrant assembly by the DEVELOPER. Relocations of five feet or less shall be accomplished by the DEVELOPER utilizing a section of pipe of the approximately length, diameter, material, and restrained joints.

H. Dead Ends:

1. In order to provide increased reliability of service and reduce head loss, dead ends shall be minimized by making appropriate tie-ins whenever practical, as determined by PCU.
2. Where permanent dead-end mains occur, they shall terminate with a fire hydrant, flushing hydrant, or blow-off assembly for flushing purposes. Automatic-metered flushing devices may be required to maintain water quality in water mains. No potable water flushing device shall be directly connected to any WASTEWATER or STORMWATER SYSTEM.

I. Valves:

Sufficient valves shall be provided on water mains so that inconvenience and sanitary hazards will be minimized during repairs. Inline valves shall be located no more than 500 feet apart in commercial, industrial, and high-density residential areas and no more than 1000 feet in all other areas. In addition, inline valves shall be utilized to isolate a maximum of 40 ERC's in order to reduce inconveniences to other customers. A minimum of two valves per tee and three valves per cross shall be required to isolate and maintain adequate service. Valves shall be placed at phase lines and located at the end of all water main extensions except at cul-de-sacs.

J. Restrained Joints:

1. Pressure piping, fittings, and other items requiring restraint shall be restrained by

assemblies or devices designed for the maximum pressure condition (test pressure) in accordance) in accordance with the STANDARD DRAWINGS.

2. In the event that it is necessary to locate proposed mains or leave existing mains longitudinally under any part of a proposed roadway subject to regular non-residential traffic or with speed limits above 30 miles per hour, such mains shall have restrained joints or be constructed within steel casing(s).

K. Separation of Water Mains and Sewers:

1. Separation of potable water, reclaimed water, wastewater, and stormwater systems shall comply with FDEP regulations as detailed in the STANDARD DRAWINGS.
2. Water pipes shall not pass through any part of a storm sewer or manhole. A minimum separation from storm water structures in accordance with the STANDARD DRAWINGS shall be maintained to facilitate maintenance and operation.

L. Combination Air/Vacuum Release Valves:

Automatic air release valves of appropriate size and number shall be installed in accordance with the STANDARD DRAWINGS to prevent air locking formation. Automatic combination air and vacuum release valves shall be utilized to prevent both air locking and vacuum formation. All such valves are required at significant high points of the main or as specified by PCU. Valves shall be clearly delineated on the profile view for each main in the PLANS. The ENGINEER shall submit calculations to PCU justifying the valve sizes and numbers as specified by AWWA M-51 "Air Release, Air/Vacuum, and Combination Air Valves".

M. Permanent sample stations shall be required in accordance with the STANDARD DRAWINGS and as directed by PCU.

N. Provision for the installation of temporary access points into and egress points out of the piping system for pigging and cleaning purposes shall be incorporated into the design for pipe diameters. Permanent and temporary access and egress points shall conform to the STANDARD DRAWINGS.

O. All buildings over two stories in height shall be provided with individual domestic water service booster pumps which shall be located within each building. Master booster pumps for developments shall not be permitted.

P. All buildings over two stories in height shall be provided with individual fire suppression system booster pumps which shall be located within each building. Master booster pumps for developments shall not be permitted.

PART 5 – SYSTEM CONNECTION AND SERVICE CONNECTIONS

A. Water services and connections shall conform to the applicable provisions of this

MANUAL. Only 1, 2, 4, 6, 8, 10, and 12-inch services will be permitted. Where water services greater than 12 inches are required, additional services shall be provided. It is recommended that hospitals install at least two services. PCU will install services and connections to existing water systems up to two-inch, after payment of applicable fees and charges. The CONTRACTOR shall furnish service connections for new water main extensions.

PART 6 - WATER METERING

A. General:

All water service connections shall be metered. In general, the method and location of metering shall follow the guidelines listed below and is subject to PCU's determination of appropriateness.

1. All meters shall be sized in accordance with Section 3 of the "Utilities Administration Manual" and this MANUAL's "Approved Meters List".
2. An above ground meter assembly or assemblies shall be required for all non-residential installations regardless of size.
3. Single family and duplex residential meters that are two inches or smaller shall be installed in PCU approved meter boxes installed by the DEVELOPER.
4. On-site water systems downstream of and served by a master meter assembly shall be maintained by the Homeowners Association, Owners Association, or the Property Owner.
5. The installation, operation, maintenance, and reading of sub-meters shall be the responsibility of the DEVELOPER.
6. The ENGINEER shall obtain approval from PCU before finalizing the metering system design.
7. Unless specifically approved by PCU, meter boxes shall not be installed in sidewalks, driveways, or areas subject to vehicular traffic.
8. Meters subject to vehicular traffic shall be installed in a traffic rated meter box.

B. Single Family, Duplex, and Town Homes Developments with Public Rights-of-Way:

1. Each unit shall be individually metered. Services shall be installed as indicated by the STANDARD DRAWINGS.
2. Multi-family subdivisions and town home developments shall have a minimum 4-inch stub out for each building, or groups of buildings for fire sprinkling systems when required by the Fire Marshall. A 4 inch gate valve and a mechanical joint end cap shall be placed at the end of each stub out.
3. An approved cross connection control assembly shall be provided if a separate fire suppression system is required. Both the cross connection control assembly and the fire suppression system shall be owned and maintained by a Homeowner's/Condominium's Association.

C. Single Family, Duplex, and Town Homes Developments with Private Rights-of-Way:

1. Individual meters may be permitted in accordance with this Section if the private streets are designed with an urban design cross section in accordance with the latest edition of the LAND DEVELOPMENT CODE. A Polk County Utilities Easement shall be dedicated over all private street rights-of-way in their entirety. In addition, sufficient area must be available outside of paved areas to locate water mains, services, and meters. If the above criteria cannot be met, the development shall be master metered.
2. Town Home Subdivisions shall have a minimum 4-inch stub out for each building, or groups of buildings for fire sprinkling systems when required by the Fire Marshall. A 4 inch gate valve and a mechanical joint end cap shall be placed at the end of each stub out.
3. An approved cross connection control assembly shall be provided if a fire suppression system is required. The fire suppression system shall be owned and maintained by the Homeowner's/Condominium's Association.

D. Commercial, Industrial, Institutional, and Multi-Family Developments with Buildings adjacent to Public Rights-of-Way and without Private Fire Suppression Mains:

1. Each building shall be individually metered with the appropriate cross connection control assembly installed. All meters and cross connection control assemblies shall be located adjacent to public rights-of-way at the property line in a Polk County Utilities Easement.

E. Commercial, Industrial, Institutional, and Multi-Family Developments with Buildings adjacent to Private Streets and Private Fire Suppression Mains (including timeshares, condo hotels, apartments, and condominiums developments):

1. Apartments, Condominiums, and Multi-Family Developments shall have one of the following:
   a. A fire service type master meter to provide both domestic and fire suppression supply water. All projects shall be designed so that private sub-metering of individual units with the appropriate cross connection control assemblies shall be accommodated, or
   b. Dual systems with separate domestic and fire suppression water mains, as approved by PCU. Dual systems shall require installation of the appropriate cross connection control assembly on both the fire suppression main and the domestic main. All projects shall be designed so that private sub-metering of individual units is utilized to facilitate water conservation.
2. Commercial, Industrial, and Institutional Developments shall have one of the following:
   a. A fire service type master meter to provide both domestic and fire suppression supply water. All projects shall be designed so that private sub-metering of individual units with the appropriate cross connection control assemblies shall be accommodated, or
   b. Dual systems with separate domestic and fire suppression water mains, as

approved by PCU. Dual systems shall require installation of the appropriate cross connection control assembly on both the fire suppression main and the domestic main. All projects shall be designed so that private sub-metering of individual units is utilized to facilitate water conservation.

3. Retail Centers and Malls shall have one of the following:
   a. A master domestic meter where fire suppression is provided by public fire hydrants. All developments shall be designed so that private sub-metering of individual units with the appropriate approved cross connection control assembly shall be accommodated in order to facilitate water conservation. The master meter shall be located adjacent to a public right-of-way in a Polk County Utilities Easement, or
   b. A fire service type master meter assembly where fire suppression is provided by private fire hydrants and/or fire suppression systems. All developments shall be designed so that private sub-metering of individual units with the appropriate cross connection control assembly shall be accomplished in order to facilitate water conservation. The master meter shall be located adjacent to a public right-of-way in a Polk County Utilities Easement, or
   c. Dual systems with separate domestic and fire suppression water mains, as approved by PCU. Dual systems shall require installation of the appropriate cross connection control assembly on both the fire suppression main and the domestic main. All projects shall be designed so that private sub-metering of individual units is utilized to facilitate water conservation.
   d. Individual domestic meters to each building or unit where fire suppression is provided by public hydrants. All meters shall be located adjacent to a public right-of-way in a Polk County Utilities Easement, or

F. Meter Installation:

Meters will be installed after payment of applicable fees and charges to PCU. PCU approved meters that are larger than two inches shall be purchased and installed by the DEVELOPER. Installation of meters two inches and smaller shall be provided and installed by PCU. Single family residential meters smaller than two inches in size shall be installed underground in an approved meter box. All other meters shall be installed above ground and located in a Polk County Utilities Easement located adjacent to but outside of public rights-of-way per the STANDARD DRAWINGS.

G. Meter Sizing:

PCU shall approve the size and quantity of all meters in accordance with Part 6 (A) (1) above. The DEVELOPER's ENGINEER shall provide sufficient information on estimated average, peak, and minimum flows so that meter size can be determined.

PART 7 - MATERIALS, INSTALLATION, AND TESTING

A. Applicable provisions of this MANUAL shall apply.

PART 8 - LOCATION AND IDENTIFICATION

A. A means for locating and identifying all water mains and valves shall be provided in accordance with this MANUAL and the STANDARD DRAWINGS.

PART 9 - CROSS CONNECTION CONTROL

A. General:

1. In order to protect the potable water supply system from contamination due to cross-connections, PCU approved cross connection control assemblies shall be installed on the potable water system as outlined in the "Cross Connection Control Policy Manual".

PART 10 – CONSTRUCTION

10.01 SCOPE OF WORK

A. These specifications cover the pipes, fittings, and appurtenances used for potable water systems. All materials shall be utilized in accordance with the appropriate "Approved Materials Checklist".

B. The CONTRACTOR shall replace, at his expense, all materials found to be defective or damaged in handling or storage. The CONTRACTOR shall, if requested by PCU, furnish certificates, affidavits of compliance, test reports, or samples for analysis for any of the materials specified herein. All pipe delivered to project site for installation is subject to random testing for compliance with the designated specifications.

C. Pipe and fitting interior linings shall conform to ANSI/NSF 61 list of approved materials standard.

D. Potable water mains, service piping, and connections shall be installed as indicated in the STANDARD DRAWINGS.

E. Pigging of mains shall be used to remove foreign materials in lieu of flushing.

PART 11 – PRODUCTS

11.01 PIPE MATERIALS

A. PVC Pipe:

PVC water distribution mains shall be manufactured in accordance with AWWA standard C900, C905, or C909, latest edition. Pipe that is 4 to 12 inches in diameter shall be C900 and have a dimension ratio of 18. Pipe larger than 12 inches in diameter shall be C905 or C909 and have a dimension ratio of 25. Pipe shall be blue in color.

B. Ductile Iron Pipe:

Ductile iron pipe shall conform to ANSI/AWWA A21.51/C151. Pipe shall be pressure class 350 for 3-inch to 12-inch, pressure class 250 for 16-inch to 20-inch, pressure class 200 for 24-inch, and pressure class 150 for 30-inch to 64-inch.

C. HDPE Pipe:

HDPE pipe shall be in accordance with AWWA C906 and shall have an outside diameter equal to ductile iron pipe for the same size. Pipe shall have a minimum dimension ratio of 11 for use with ductile iron pipe fittings and have a minimum working pressure of 150 psi. In the event that HDPE pipe with 42 inch and larger diameters are not available due to general industry limitations, PCU may consider the use of outside diameters based on iron pipe sizes.

11.02 JOINT MATERIALS

A. PVC Pipe Joints:

1. PVC pipe shall have integral bell push on type joints conforming to ASTM D3139.
2. Fusible PVC pipe lengths, as used in horizontal directional drill applications only, shall be assembled in the field with butt fused joints. The CONTRACTOR shall follow the pipe supplier's written guidelines for this procedure. All fusion joints shall be completed as specified by the pipe supplier and this MANUAL.

B. Ductile Iron Pipe Joints:

Joints for ductile iron pipe shall be push-on or mechanical joints conforming to ANSI/AWWA A21.11/C111., Restrained or flanged joints shall be provided where called for in the PLANS. Flanged points shall conform to AWWA C115.

C. HDPE Pipe Joints:

HDPE joints shall conform to AWWA C906.

11.03 FITTINGS

A. Ductile Iron and PVC Pipe:

Fittings shall be mechanical joint ductile iron compact fittings in accordance with ANSI/AWWA A21.53/C153.

B. HDPE Pipe:

1. Fittings used with HDPE pipe shall be mechanical joint ductile iron compact fittings in accordance with ANSI/AWWA A21.53/C153 unless otherwise specifically approved by PCU.

11.04 COATINGS AND LININGS FOR DUCTILE IRON PIPE AND FITTINGS

A. Pipe and Fittings

Ductile iron pipe and fittings shall have an interior protective lining of cement-mortar with a seal coat of asphaltic material in accordance with ANSI/AWWA A21.4/C104.

Exterior ductile iron pipe shall be coated with asphaltic material in accordance with a minimum one mil thick in accordance with ANSI/AWWA A21.51/C151.

B. Additional Applied Exterior Coatings for Above Ground Pipe and Fittings

Pipe, fittings, and valves shall be thoroughly cleaned and given one field coat (minimum 1.5 mils dry thickness) of rust inhibitor primer in addition to the existing factory applied coat of rust inhibitor primer. Intermediate and finished field coats of Alkyd shall also be applied by the CONTRACTOR with a minimum 1.5 mil dry thickness for each coat. Primer and field coats shall be compatible and applied in accordance with the manufacturer's recommendations. Refer to the appropriate "Approved Materials Checklists". Final field coat shall be blue for potable water.

11.05 POLYETHYLENE ENCASEMENT

A. Polyethylene encasement of ductile iron pipe shall be in accordance with ANSI/AWWA A21.51/C105 and blue in color. Polyethylene encasements shall be required in accordance with AWWA C105 and when crossing or within a power transmission and gas transmission easements.

11.06 SERVICE PIPE, STOPS, FITTINGS, AND SERVICE SADDLES

A. Service Connections at Main:

1. Service connections of one and two inches shall be brass body reduced port type corporation stops, equipped with connections compatible with the polyethylene tubing and threaded in accordance with specifications in AWWA C800, AWWA C901 and shall comply with NSF-61. One and two-inch services at the water main shall have connections for female iron pipe by female iron pipe thread, conforming to AWWA C509.
2. Service connections, 4-inch through 12-inch, shall have iron body resilient seat gate valves.
3. Service taps for air release valve installations shall utilize a 2-inch brass ball type corporation stop.

B. Service Pipe:

1. One-inch and two-inch service lines shall be PE4710 polyethylene tubing with SDR 9 dimensions, conforming to specifications in AWWA C800, AWWA C901, ASTM D-1248, ASTM D-3035, and ASTM D-2239.
2. Service lines, that are 4, 6, 8, 10, and 12 inches in size, shall be the same as water main pipe.

C. Service Control Valves at Property Line:

1. One-inch and two-inch size service curb stops shall be reduced port ball valves, made of brass, cast and machined in accordance with specifications in AWWA C800, AWWA C901, compliant with NSF-61 and compatible with polyethylene

tubing connections. Rev December 2012

2. For connections larger than two inches, the CONTRACTOR shall provide resilient seat gate valves.

D. Service Fittings:

1. One-inch and two-inch fittings shall be brass, cast and machined in accordance with specifications in AWWA C800, AWWA C901, complaint with NSF-61, and compatible with polyethylene tubing connections.

2. Fittings, that are 4, 6, 8, 10, and 12 inches in size, shall be the same as water main fittings.

E. Service Tapping Saddles:

1. Stainless Steel Service Saddles:

Saddles shall have epoxy or nylon coated stainless steel 18-8 type 304 straps, and iron pipe threads. Double straps shall be a minimum of 2-inches in width each, Single straps shall be a minimum of three inches wide. Saddles used to connect to HDPE pipe shall allow for the normal expansion and contraction of such pipe.

2. Service Connections:

a. PVC and HDPE Pipe Service Saddle:

i. One-inch and two-inch services shall utilize with controlled OD.

ii. Four-inch or larger services shall use mechanical tapping sleeves, stainless steel sleeve for size on size taps, or epoxy coated sleeves with stainless steel hardware for all other sizes.

b. Ductile Iron Pipe Service Saddle:

i. One-inch and two-inch services shall use a controlled OD service tapping saddle with stainless steel straps and a ductile iron body that is either nylon or epoxy coated.

ii. Four-inch or larger services shall be mechanical tapping sleeves, stainless steel sleeve for size on size taps, or epoxy coated sleeve with stainless steel hardware for all other sizes.

11.07 RESILIENT SEAT GATE VALVES

A. Gate valves shall be resilient seat gate valves, manufactured to meet or exceed the requirements of AWWA C515, latest revision, and in accordance with these specifications. Valves shall have an unobstructed waterway equal to or greater than the full nominal diameter of the valve. Valves shall have a minimum pressure rating of 150 psi.

B. Valves that are 16 inches and larger shall have side actuators. The valve body, bonnet and bonnet cover shall be ductile iron ASTM A126, Class B. All ferrous surfaces inside and outside shall have a fusion-bonded epoxy coating in accordance with AWWA C

550. A two-inch wrench nut shall be provided for operating the valve. All valves are to be tested in strict accordance with AWWA C515.

C. Directional Opening:

All valves shall open left or counter clockwise.

D. The valves shall be non-rising stems with the stem made of cast, forged, or rolled bronze as specified in AWWA C515. Two stem seals shall be provided and shall be of the o-ring type. The stem nut must be independent of the gate.

E. The resilient sealing mechanism shall provide zero leakage at test and normal working pressure when installed with the line flow from either direction.

11.08 BUTTERFLY VALVES

A. Typically, butterfly valves shall not be installed within any PCU system, except directly adjacent to storage tanks for isolation purposes.

B. Butterfly valves and operators shall conform to the "AWWA Standard Specifications for Rubber Seated Butterfly Valves", Designation C504, latest version, except as hereinafter specified, shall be Class 150A or B.

C. The valve body materials shall be epoxy coated inside and out as per AWWA C550. The valve body shall be constructed of close grain cast iron per ASTM A126, Class B or equivalent material. All retaining segments and adjusting devices shall be of corrosion resistant material.

D. Valve seats shall be a natural rubber or synthetic rubber compound. Valve seats shall be field adjustable and replaceable without dismounting operator disc or shaft and without removing the valve from the line. All retaining segments and adjusting devices shall be of corrosion resistant material.

E. The face-to-face dimensions of valves shall be in accordance with above-mentioned AWWA specification for short-body valve.

F. Should PCU find it necessary to install butterfly valves along mains that are 16 inches in diameter or larger, a 6-inch minimum bypass with one gate valve shall be installed around each valve.

G. The valve shaft shall be turned, ground, and polished constructed of Type 304 stainless steel and designed for both torsional and shearing stresses when the valve is operated under its greatest dynamic or seating torque. Shaft shall be of either a one-piece unit extending full size through the value disc and valve bearing or it may be of a stub shaft design.

H. Valve Actuator:

The butterfly valve actuators shall conform to the requirements of AWWA standard specifications for "Rubber Seated Butterfly Valves, Designation C504", insofar as applicable.

I. Directional opening:

All valves shall open left or counter clockwise.

11.09 VALVE BOXES

A. Standard Three-Piece Cast Iron Valve Box:

Three-piece valve boxes are required for mains less than six feet below finished grade as indicated in the STANDARD DRAWINGS. Valve boxes shall comply with AWWA standards and be provided with suitable heavy duty ductile or cast iron bonnets and shall extend to such elevation at or slightly above the finished grade surface as directed by PCU. The barrel shall be screw type only and have a 5-1/4-inch shaft. The upper section shall have a flange at the bottom having sufficient bearing area to prevent settling and shall be complete with ductile or cast iron covers. Ductile or cast iron covers shall have "WATER" cast into the top for all water mains.

B. Valve Box Assembly:

Valve box assemblies, as indicated in the STANDARD DRAWINGS, are required for any size main whenever the top of the valve nut is six feet or deeper below the finished surface elevation that is directly above the valve location. Valve boxes shall comply with AWWA standards and be one complete assembled unit composed of the ductile or cast iron valve box with a 5-1/4 inch barrel shaft, and steel extension stem that attaches to the valve body. All moving parts of the extension stem shall be enclosed in a housing to prevent contact with the soil. Valve box assembly shall be adjustable to accommodate variable depths.

C. The stem assembly shall be of a telescoping design that allows for variable adjustment length. The material shall be galvanized square steel tubing. The stem assembly shall have a built-in device that prevents the stem assembly from disengaging at its fully extended length. The extension stem must be capable of surviving a torque test to 1,000 ft-lb without failure.

D. Valve boxes, located in roadways with speed limits above 30 miles per hour or on mains that are 16 inches in diameter or larger, shall have locking lids utilizing a five sided nut with a special wrench needed to open. Valve lids to be made as shown in the STANDARD DRAWINGS.

E. A test station box shall be installed into the valve pad for placement of the locating wire. The test station box shall be as specified in the appropriate "Approved Materials Checklist".

F. Locating wire shall be 14-gauge single strand solid core copper wire with insulation. The color of the insulation shall be the same color as the color code for the pipe being installed.

G. Each valve marker shall be made of bronze with each specific valve's information clearly imprinted on its top surface, provided with a hanger pin, and installed in each valve collar as shown in the STANDARD DRAWINGS.

11.10 AIR RELEASE VALVES

A. Valves for use in water mains shall be single body automatic air release valves designed to release large quantities of air at start up, admit air on shut down, and release air in operation. Automatic combination air and vacuum release valves shall be utilized to prevent both air locking and vacuum formation. Valves shall be made of either high strength plastic with corrosion resistant polymer materials or have a cast iron body, cover, and baffle, stainless steel float, bronze water diffuser Buna-N or Viton seat and stainless steel trim. Valves must be in stalled in an enclosure as shown on the STANDARD DRAWINGS. Fittings from the main to the valve in the enclosure shall be threaded and made of brass.

11.11 FIRE HYDRANT ASSEMBLIES

A. General:

Fire hydrant assemblies shall consist of a fire hydrant, isolation gate valve, and associated piping that are attached to each other and the main by restrained joints. Fire hydrants shall have a minimum of 5-1/4-inch valve opening and shall comply with AWWA Standard C502 for fire hydrants for water works service, unless in conflict with this MANUAL, in which case this MANUAL shall apply. Each hydrant shall have 6-inch mechanical joint ends and shall open by turning to the left (counter-clockwise). The barrel of fire hydrants shall be 36 inches in length below final grade elevation to match main depth installation. Hydrants shall be provided with two 2-1/2-inch hose nozzles and one, 4-1/2-inch pumper nozzle, all having National Standard hose threads. Nozzles shall have caps attached by chains. Operating nuts shall be AWWA Standard pentagonal, measuring 1-1/2-inch point to flat. Fire hydrants shall be equipped with o-ring packing. Fire hydrants shall be supplied without drain holes or with permanently plugged drain holes.

B. Coating and painting:

1. All non-brass parts of the hydrant both inside and outside shall be painted, in accordance with AWWA C-502.
2. The shoe of the hydrant below the ground line shall have a fusion bonded epoxy coating and the barrel of the hydrant below ground shall be coated with a mastic material.
3. The outside of the hydrant, above the finished ground line, shall be thoroughly cleaned and thereafter painted with one coat of paint of a durable composition, a minimum one additional coat of paint on the body of the hydrant and on the bonnet. The first coat must dry thoroughly before the second coat is applied.
4. The above ground portion of hydrants to be owned and maintained by PCU shall receive with two coats of ultra-violet stabilized International Orange colored paint.
5. The above ground portion of privately owned and maintained hydrants shall receive two coats of ultra-violet stabilized paint in a color that does not replicate the color

used by PCU or any other water utility within Polk County.

6. The paint used shall be in accordance with the appropriate "Approved Materials Checklist".

C. Hydrant Reflective Pavement Markers:

Where fire hydrants are located adjacent to paved roadways, each fire hydrant shall have a blue reflective pavement marker located as follows:

1. On undivided paved roadways, 6 inches to the hydrant side of the centerline stripe.
2. On divided paved roadways, 6 inches to the side of the lane stripe which is closest to the hydrant in line with the largest port.
3. On un-striped paved roadways, the center of the roadway (not the driving lane).

Typically, the high impact acrylic markers shall measure 4 inches by 4 inches by 0.68 inches, have a minimum compression rating of 6000 pounds (ASTM D4280-04), and have a maximum acceptable deflection rating of 0.130 inch at 2000 pounds.

The marker shall be securely installed on the pavement using a conventional epoxy adhesive. The blue reflective faces of each marker shall face in both directions of traffic flow.

D. All fire hydrant assemblies shall be covered with black plastic bags until such time that the potable water system has been cleared for service by the FDOH.

11.12 HYDRAULICALLY OPERATED CONTROL VALVES

A. Hydraulically operated control valves may be installed in distribution systems that require automatic or remote control, pressure regulation, solenoid operation, rate of flow control, liquid level control, or check valve operation. Each valve shall consist of a main valve and pilot control system designed and installed in accordance with the STANDARD DRAWINGS and Approved Materials Checklist. The main valve shall be hydraulically actuated, line pressure operated, diaphragm actuated, globe pattern valve. The main valve shall contain an EPDM seat disc contained by a disc retainer and forming a tight seal against removable seat insert. No O-ring type discs (circular, square, or quad type) shall be permitted as the seating surface.

PART 12 - CONSTRUCTION

12.01 MATERIAL IDENTIFICATION AND TESTING

A. Pipe Identification and Location:

1. Each length of pipe shall bear the name or trademark of the manufacturer, the location of the manufacturing plant, and the class or strength classification of the pipe. The markings shall be plainly visible on the pipe barrel. Pipe, which is not

clearly marked, is subject to rejection. The CONTRACTOR shall remove all rejected pipe from the project site within five NORMAL WORKING DAYS.

2. All PVC pipe and other pipe that is factory color-coded on the outside surface of the pipe shall be identified and locatable as specified in the STANDARD DRAWINGS. All DI pipe, and other pipe not factory color-coded on the outside surface of the pipe, shall be identified and locatable as specified in Appendix A, "STANDARD DRAWINGS". Where the above type of identification method is not considered to be practical by PCU, the pipe shall have a field applied three inch wide permanent blue paint stripe down the top outside center of the pipe along its entire length.

B. Material Testing Requirements:

1. If requested by PCU, a sample of pipe to be tested shall be selected at random by PCU or the testing laboratory hired by PCU.
2. When the samples tested conform to applicable standards, all pipe represented by such samples shall be considered acceptable based on the test parameters measured. Copies of test reports shall be available before the pipe is installed on the project.
3. In the event that any of the test samples fail to meet the applicable standards, all pipe represented by such tests shall be subjected to rejection. The CONTRACTOR may furnish two additional test samples from the same shipment or delivery, for each sample that failed and the pipe will be considered acceptable if all of these additional samples meet the requirements of the applicable standards. All such retesting shall be at the CONTRACTOR's expense.
4. Pipe that has been rejected by PCU shall be removed from the site of the work by the CONTRACTOR and replaced with pipe that meets these specifications.

12.02 SEPARATION OF MAINS

Separation shall be in accordance with the "STANDARD DRAWINGS".

12.03 INSTALLATION OF VALVES

A. All valves shall be inspected upon delivery in the field to insure proper working order before installation. They shall be set and jointed to the pipe in the manner as set forth in the AWWA Standards for the type of connection ends furnished. All valves and appurtenances shall be installed true to alignment and rigidly supported. Any damage to the above items shall be repaired to the satisfaction of PCU before they are installed.

12.04 NOTIFICATION OF CONNECTION TO EXISTING MAINS

A. PCU shall be notified at least five NORMAL WORKING DAYS in advance to schedule main connections and valve operations. All existing valves are to be operated only by PCU. All valves installed are to remain closed during construction.

The CONTRACTOR shall exercise extreme caution when excavating in proximity of

PCU mains. PCU main locations shown on plans are not exact or guaranteed. The CONTRACTOR is responsible for field verifying existing utility locations. PCU dispatch operator shall be notified immediately in the event of a force main, water main, or reclaimed water main break or damage. The CONTRACTOR shall immediately repair all damage to PCU mains, at the CONTRACTOR's expense. If the repair is not made in a timely manner, as determined by the PCU Inspector, PCU may perform repairs and the CONTRACTOR will be charged for repairs.

12.05 WATER SERVICE LOCATION AND IDENTIFICATION

A. The location of all service lines shall be as shown on the STANDARD DRAWINGS. On curbed streets, the exact location of each service shall be adequately and permanently identified using durable plastic blue colored pavement markers that states "Water Service" and "Call Before You Dig" as specified by the appropriate "Approved Materials Checklist". Each marker shall be securely attached to the curb in accordance with the manufacturer's guidelines approximately 6 inches from the top of the curb.

B. Where no curb exists, the exact location of each service shall be adequately and permanently identified using durable plastic blue colored pavement markers that states "Water Service" and "Call Before You Dig" as specified by the appropriate "Approved Materials Checklist". Each marker shall be securely attached to the pavement in accordance with the manufacturer's guidelines approximately 6 inches from the edge of pavement.

12.06 WATER VALVE LOCATION AND IDENTIFICATION

A. On curbed streets, the exact location of each valve shall be adequately and permanently identified using durable plastic blue colored pavement markers that states "Water Valve" and "Call Before You Dig" as specified by the appropriate "Approved Materials Checklist". Each marker shall be securely attached to the curb in accordance with the manufacturer's guidelines approximately 6 inches from the top of the curb.

B. Where no curb exists, the exact location of each valve shall be adequately and permanently identified using durable plastic blue colored pavement markers that states "Water Valve" and "Call Before You Dig" as specified by the appropriate "Approved Materials Checklist". Each marker shall be securely attached to the pavement in accordance with the manufacturer's guidelines approximately 6 inches from the edge of pavement.

12.07 HYDRAULICALLY OPERATED CONTROL VALVES

A. The CONTRACTOR shall furnish and install the valve as specified by the PLANS and in accordance with the STANDARD DRAWINGS.

B. The main valve and the pilot control system shall be factory assembled and tested to determine conformance with the requirements of this Specification section.

C. All settings shall be factory pre-set and verified in the field. Hydraulic pilots shall be tagged with model #, adjustment range, and factory setting.

D. All valves shall be installed according to the valve manufacturer's instructions at the location shown in the PLANS.

E. After installation is complete, operational performance tests shall be conducted in the presence of the manufacturer's representative, CONTRACTOR, and ENGINEER. The manufacturer's representative shall provide training and oversee start-up, testing, and adjustment of the valve to ensure zero leakage, correct installation, and function. Any deficiencies revealed during testing shall be corrected and tests repeated at CONTRACTOR's expense until all tests are passed to the satisfaction of the ENGINEER.

F. Operation and Maintenance Manuals shall be provided by CONTRACTOR.

CHAPTER 4 WATER

Section 411 Raw Water Main Design Standards and Specifications

December 2010

PART 1 - GENERAL

A. Raw water mains shall be utilized to transport untreated water from a source or sources to a potable water production facility.

PART 2 – LOCATION

A. Refer to “Potable Water Main Design Standards and Specifications”.

PART 3- DESIGN CALCULATIONS

A. Refer to “Potable Water Main Design Standards and Specifications”.

PART 4 - DESIGN

A. Pipe Cover:

A minimum cover of 36 inches shall be provided.

B. Pressure:

Refer to “Potable Water Main Design Standards and Specifications”.

C. Diameter:

Refer to “Potable Water Main Design Standards and Specifications”.

D. Velocity:

E. Refer to “Potable Water Main Design Standards and Specifications”.Design Friction Losses:

Refer to “Potable Water Main Design Standards and Specifications”.

F. Design Pressure and Restraint

Refer to “Potable Water Main Design Standards and Specifications”.

G. Valves:

Refer to “Potable Water Main Design Standards and Specifications”.

H. Air Release Valves:

Refer to “Potable Water Main Design Standards and Specifications”.

I. Control Valves:

Refer to “Potable Water Main Design Standards and Specifications”.

J. Restrained Joints:

Refer to “Potable Water Main Design Standards and Specifications”.

K. Separation of Raw Water Mains from other Mains:

Separation of raw water, reclaimed water, potable water, and wastewater system shall comply with FDEP regulations and PCU standards per the STANDARD DRAWINGS.

L. Air Release Valves:

Refer to "Potable Water Main Design Standards and Specifications".

M. Permanent sample stations shall not be required on raw water mains.

N. Pigging (Swabbing) Stations:

Refer to "Potable Water Main Design Standards and Specifications".

PART 5 - CONSTRUCTION

5.01 SCOPE OF WORK

A. These specifications cover the pipes, fittings, and appurtenances used for raw water mains. All materials shall be utilized in accordance with the appropriate "Approved Materials Checklists".

B. The CONTRACTOR shall replace, at his expense, all materials found to be defective or damaged in handling or storage. The CONTRACTOR shall, if requested by PCU, furnish certificates, affidavits of compliance, test reports, or samples for analysis for any of the materials specified herein. All pipe delivered to project site for installation is subject to random testing for compliance with the designated specifications.

C. Pipe and fitting interior linings shall conform to ANSI/NSF 61 list of approved materials standard.

D. Raw water mains, service piping, and connections shall be installed as indicated in the STANDARD DRAWINGS.

E. The color for raw water pipes and appurtenances shall be as directed by FDOH and in accordance with Section 411, 7.01.A.2 below.

F. Fire hydrant assemblies shall not be installed on any part of a raw water main.

G. Pigging of pipe shall be used to remove foreign materials in lieu of flushing.

PART 6 - PRODUCTS

6.01 PIPE MATERIALS

A. PVC Pipe:

Refer to "Potable Water Main Design Standards and Specifications".

B. Ductile Iron Pipe:

Refer to "Potable Water Main Design Standards and Specifications".

C. HDPE Pipe:

Refer to "Potable Water Main Design Standards and Specifications".

6.02 JOINT MATERIALS

A. Refer to "Potable Water Main Design Standards and Specifications".

6.03 FITTINGS

A. Refer to "Potable Water Main Design Standards and Specifications".

6.04 COATINGS AND LININGS FOR DUCTILE IRON PIPE AND FITTINGS

A. Fittings:
Refer to "Potable Water Main Design Standards and Specifications".

B. Pipe:
Refer to "Potable Water Main Design Standards and Specifications".

C. Additional Applied Exterior Coatings for Above Ground Pipe and Fittings:
Refer to "Potable Water Main Design Standards and Specifications".

6.05 POLYETHYLENE ENCASEMENT

A. Refer to "Potable Water Main Design Standards and Specifications".

6.06 CONNECTIONS TO MAIN

A. Refer to "Potable Water Main Design Standards and Specifications".

6.07 RESILIENT SEAT GATE VALVES

A. Gate valves shall be resilient seat gate valves, manufactured to meet or exceed the requirements of AWWA C509, latest revision, and in accordance with these specifications. Valves shall have an unobstructed waterway equal to or greater than the full nominal diameter of the valve. Valves shall have a minimum pressure rating of 150 psi.

B. Valves that are 16 inches and larger shall have side actuators. The valve body, bonnet and bonnet cover shall be cast iron ASTM A126, Class B. All ferrous surfaces inside and outside shall have a fusion-bonded epoxy coating in accordance with AWWA C 550. A two-inch wrench nut shall be provided for operating the valve. All valves are to be tested in strict accordance with AWWA C509.

C. Directional Opening:
All valves shall open left or counter clockwise.

D. The valves shall be non-rising stems with the stem made of cast, forged, or rolled bronze as specified in AWWA C509. Two stem seals shall be provided and shall be of the o-ring type. The stem nut must be independent of the gate.

E. The resilient sealing mechanism shall provide zero leakage at test and normal working pressure when installed with the line flow from either direction.

6.08 BUTTERFLY VALVES

A. Typically, butterfly valves shall not be installed within any PCU system, except directly adjacent to storage tanks for isolation purposes.

B. Butterfly valves and operators shall conform to the "AWWA Standard Specifications for Rubber Seated Butterfly Valves", Designation C504, latest version, except as hereinafter specified, shall be Class 150A or B.

C. The valve body materials shall be epoxy coated inside and out as per AWWA C550. The valve body shall be constructed of close grain cast iron per ASTM A126, Class B or equivalent material. All retaining segments and adjusting devices shall be of corrosion resistant material.

D. Valve seats shall be a natural rubber or synthetic rubber compound. Valve seats shall be field adjustable and replaceable without dismounting operator disc or shaft and without removing the valve from the line. All retaining segments and adjusting devices shall be of corrosion resistant material.

E. The face-to-face dimensions of valves shall be in accordance with above-mentioned AWWA specification for short-body valve.

F. Should PCU find it necessary to install butterfly valves along mains that are 16 inches in diameter or larger, a 6-inch minimum bypass with one gate valve shall be installed around each valve.

G. The valve shaft shall be turned, ground, and polished constructed of Type 304 stainless steel and designed for both torsional and shearing stresses when the valve is operated under its greatest dynamic or seating torque. Shaft shall be of either a one-piece unit extending full size through the value disc and valve bearing or it may be of a stub shaft design.

H. Valve Actuator:

The butterfly valve actuators shall conform to the requirements of AWWA standard specifications for "Rubber Seated Butterfly Valves, Designation C504", insofar as applicable.

I. Directional opening:

All valves shall open left or counter clockwise.

6.09 VALVE BOXES

A. Standard Three-Piece Cast Iron Valve Box:

Three-piece valve boxes are required for mains less than six feet below finished grade as indicated in the STANDARD DRAWINGS. Valve boxes shall comply with AWWA standards and be provided with suitable heavy duty ductile or cast iron bonnets and shall extend to such elevation at or slightly above the finished grade surface as directed by PCU. The barrel shall be screw type only and have a 5-1/4-inch shaft. The upper section shall have a flange at the bottom having sufficient bearing area to prevent settling and shall be complete with ductile or cast iron covers. Ductile or cast iron covers shall have "RAW" cast into the top for all water mains.

B. Valve Box Assembly:

Valve box assemblies, as indicated in the STANDARD DRAWINGS, are required for any size main whenever the top of the valve nut is six feet or deeper below the finished surface elevation that is directly above the valve location. Valve boxes shall comply with AWWA standards and be one complete assembled unit composed of the ductile or cast iron valve box with a 5-1/4 inch barrel shaft, and steel extension stem that attaches to the valve body. All moving parts of the extension stem shall be enclosed in a housing to prevent contact with the soil. Valve box assembly shall be adjustable to accommodate variable depths.

C. The stem assembly shall be of a telescoping design that allows for variable adjustment length. The material shall be galvanized square steel tubing. The stem assembly shall have a built-in device that prevents the stem assembly from disengaging at its fully extended length. The extension stem must be capable of surviving a torque test to 1,000 ft-lb without failure.

D. Valve boxes, located in roadways with speed limits above 30 miles per hour or on mains that are 16 inches in diameter or larger, shall have locking lids utilizing a five sided nut with a special wrench needed to open. Valve lids to be made as shown in the STANDARD DRAWINGS.

E. A test station box shall be installed into the valve pad for placement of the locating wire. The test station box shall be as specified in the appropriate "Approved Materials Checklist".

F. Locating wire shall be 14-gauge single strand solid core copper wire with insulation. The color of the insulation shall be the same color as the color code for the pipe being installed.

G. Each valve markers shall be made of brass with each specific valve's information clearly imprinted on its top surface, provided with a hanger pin, and installed in each valve collar as shown in the STANDARD DRAWINGS.

6.10 AIR RELEASE VALVES

A. Valves for use in water mains shall be single body automatic air release valves designed to release large quantities of air at start up, admit air on shut down, and release air in operation. Automatic combination air and vacuum release valves shall be utilized to prevent both air locking and vacuum formation. Valves shall be made of either high strength plastic with corrosion resistant polymer materials or have a cast iron body, cover, and baffle, stainless steel float, bronze water diffuser Buna-N or Viton seat and stainless steel trim. Valves must be installed in an enclosure as shown on the STANDARD DRAWINGS. Fittings from the main to the valve in the enclosure shall be threaded and made of brass.

PART 7 - EXECUTION

7.01 MATERIAL IDENTIFICATION AND TESTING

A. Pipe Identification and Location:

1. Each length of pipe shall bear the name or trademark of the manufacturer, the location of the manufacturing plant, and the class or strength classification of the pipe. The markings shall be plainly visible on the pipe barrel. DI pipe shall meet all applicable requirements of AWWA C151. Pipe, which is not clearly marked, is subject to rejection. The CONTRACTOR shall remove all rejected pipe from the project site within five NORMAL WORKING DAYS.
2. All PVC pipe and other pipe that is factory color-coded on the outside surface of the pipe shall be identified and locatable as specified in the STANDARD DRAWINGS. Olive green is the material identification color established by FDOH for raw water pipe. All DI pipe, and other pipe not factory color-coded on the outside surface of the pipe, shall be identified and locatable as specified by the "STANDARD DRAWINGS. Where the above type of identification method is not considered to be practical by PCU, the pipe shall have a field applied three inch wide permanent paint stripe down the top outside center of the pipe along its entire length. Identification color shall be olive green in accordance with the requirements established by the FDOH.

B. Material Testing Requirements:

1. If requested by PCU, a sample of pipe to be tested shall be selected at random by PCU or the testing laboratory hired by PCU.
2. When the samples tested conform to applicable standards, all pipe represented by such samples shall be considered acceptable based on the test parameters measured. Copies of test reports shall be available before the pipe is installed on the project.

3. In the event that any of the test samples fail to meet the applicable standards, all pipe represented by such tests shall be subjected to rejection. The CONTRACTOR may furnish two additional test samples from the same shipment or delivery, for each sample that failed and the pipe will be considered acceptable if all of these additional samples meet the requirements of the applicable standards. All such retesting shall be at the CONTRACTOR's expense.
4. Pipe that has been rejected by PCU shall be removed from the site of the work by the CONTRACTOR and replaced with pipe that meets these specifications.

7.02 SEPARATION OF MAINS

A. Separation shall be in accordance with the "STANDARD DRAWINGS".

7.03 INSTALLATION OF VALVES

A. All valves shall be inspected upon delivery in the field to insure proper working order before installation. They shall be set and jointed to the pipe in the manner as set forth in the AWWA Standards for the type of connection ends furnished. All valves and appurtenances shall be installed true to alignment and rigidly supported. Any damage to the above items shall be repaired to the satisfaction of PCU before they are installed.

7.04 NOTIFICATION OF CONNECTION TO EXISTING MAINS

A. PCU shall be notified at least five NORMAL WORKING DAYS in advance to schedule main connections and valve operations. All existing valves are to be operated only by PCU. All valves installed are to remain closed during construction.

The CONTRACTOR shall exercise extreme caution when excavating in proximity of PCU mains. PCU main locations shown on plans are not exact or guaranteed. The CONTRACTOR is responsible for field verifying existing utility locations. PCU dispatch operator shall be notified immediately in the event of a force main, water main, or reclaimed water main break or damage. The CONTRACTOR shall immediately repair all damage to PCU mains, at the CONTRACTOR's expense. If the repair is not made in a timely manner, as determined by the PCU Inspector, PCU may perform repairs and the CONTRACTOR will be charged for repairs.

7.05 VALVE LOCATION AND IDENTIFICATION

A. The location of all valves shall be as shown on the STANDARD DRAWINGS. On curbed streets, the exact longitudinal location of each valve shall be adequately and permanently identified using durable blue colored A-TAG style pavement markers that states "Raw Water Valve" and "Call Before You Dig" that are securely installed into the curb in accordance with the manufacturer's guidelines approximately 6 inches from the top of the curb.

B. Where no curb exists, the exact longitudinal location of each valve shall be adequately and permanently identified using durable blue colored A-TAG style pavement markers that states “Raw Water Valve” and “Call Before You Dig” that are securely installed into the pavement in accordance with the manufacturer’s guidelines approximately 3 inches from the edge of pavement.

CHAPTER 4 WATER

Section 412 Potable Water Production Facilities Design Standards December 2010

PART 1 - GENERAL

A. This Section shall be applicable to the design of potable water production facilities proposed as part of any development to be constructed in compliance with the LAND DEVELOPMENT CODE, as amended, or as part of the PCU Community Investment Program.

B. Design, Construction, and Plan Review:

The design and construction of potable water production facilities associated with COUNTY approved developments shall be in compliance with this MANUAL. PLANS will be reviewed and approved by PCU as part of the subdivision or commercial site plan review process as specified by the LAND DEVELOPMENT CODE.

C. Compliance with Other Regulatory Requirements:

It shall be the responsibility of the DEVELOPER/CONTRACTOR to obtain and comply with all applicable federal, state, and local regulatory permits.

D. The DEVELOPER shall be financially responsible for any proposed designs that require modification to or may adversely affect any portion of PCU's potable water infrastructure.

PART 2 - DESIGN

A. The design of the potable water production facility, including the water source and treatment facilities shall be designed for the maximum day demand of the design year, as a minimum. Requirements of the FDEP, LAND DEVELOPMENT CODE, and COMPREHENSIVE PLAN, whichever is more restrictive, shall govern. Consideration shall be given to the design requirements of other federal and state regulatory agencies regarding safety requirements, special designs for the handicapped, plumbing, and electrical codes. No part of the facility shall be constructed below the 100 year flood prone elevation as established by FEMA.

B. The potable water production facility shall be sited on a square shaped fee simple parcel of land that measures not less than one acre in size and centered around the onsite well(s). Off site wells shall be placed in the center of a square shaped fee simple parcel of land that measures not less than one acre in size.

PART 3 - PLANT LAYOUT

A. The ENGINEER shall consider the functional aspects of the plant layout, provisions for future plant expansion, provisions for expansion of the plant waste treatment and disposal facilities, access roadways, site grading, site drainage, walkways, driveways, and delivery of chemicals.

B. Onsite buildings shall provided with adequate ventilation, adequate lighting, lightning protection system, adequate heating, adequate drainage, accessibility of equipment for operation, serving, and removal, flexibility of operation, operator safety, convenience of operation, and the placement of chemical storage and feed equipment in a separate room to reduce hazards and dust problems. Main electrical control equipment shall be located above grade and above the 100 year flood prone elevation. Adequate facilities shall be included for shop space and storage consistent with the needs of the designed facilities.

C. All buildings shall be of concrete masonry unit construction with either engineered trusses and coated metal roof systems or hollow core reinforced concrete slab based roofs. All structures shall be painted with colors in accordance with PCU standards, unless otherwise approved by PCU. All exterior doors shall be of steel construction and interior doors shall be of wood or steel construction.

D. A permanently mounted standby power generator system of sufficient size shall be required so that potable water may be treated and/or pumped to the most distance portion of the distribution system during power outages to meet the average day demand while maintaining a minimum residual pressure of 20 psi.

E. Adequate monitoring equipment, sample taps, flow meters, and pipe color coding shall be provided.

F. An operation and maintenance manual including a parts list and parts order form, operator safety procedures, and operational trouble shooting section shall be supplied for any proprietary unit installed in the facility.

G. Consideration shall be given to the safety of plant personnel and visitors. The design must comply with all applicable safety codes and regulations that may include the Florida Building Code. Uniform Fire Code, National Fire Protection Association Standards, and OSHA standards.

H. Security measures shall be installed and instituted in accordance with this MANUAL. Appropriate design measures to help ensure the security of water system facilities shall be incorporated. Such measures, as a minimum, shall include heavy duty type locks for exterior doorways, windows, gates, and other entrances to sources, treatment, and water storage facilities, signage, intrusion alarms, motion sensitive flood lighting, and 6 foot high security type fencing topped with 3 strands of barb wire. Facilities secured with electrically operated gates shall include key switches in accordance with the appropriate “Approved Materials Checklist” (See Wastewater Checklist). Other measures may include close circuit monitoring and real time water quality monitoring.

I. Electrical supply to the facility shall be placed underground onsite of the plant

property.

J. Other than pipes, conduits, foundations, and footings, the potable water production facility shall be constructed above ground.

K. Hydropneumatic tanks shall be made of steel, ASME certified, and no smaller than 15,000 gallons in size.

L. Lightning protection systems shall be installed and certified in accordance with all applicable sections of UL 96A, "Installation Requirements for Lightning Protection Systems" as published by the Underwriters Laboratories, Inc. A Master Label Certificate of Inspection for Lightning Protection Systems shall be provided to the COUNTY for each such installation.

PART 4 - MATERIALS

A. All materials used in the construction of a potable water production facility shall be in accordance with this MANUAL.

PART 1 – GENERAL WATER PRODUCTION FACILITY SCADA STANDARDS

1.01 SUMMARY OF SYSTEM

A. These standards represent minimum requirements for County projects at the time the standards were adopted. The County reserves the right to approve changes based on site specific design requirements

B. Water treatment facilities shall be able to be monitored and controlled remotely. The CONTRACTOR shall provide a Human Machine Interface (HMI) / Supervisory Control and Data Acquisition (SCADA) system, Programmable Logic Controller (PLC), and decentralized Historian for water treatment facility control as identified in this Section.

C. The SCADA process data shall be organized by unit process (UP) as identified below:

Unit Process Number	Process Name
10	Raw Pump Station/Wells
20	Preliminary Treatment
30	Primary Filtration
40	Ground Storage
50	Distribution High Service Pumping
60	Secondary Filtration
70	Pressure Control
80	Chemical Storage and Feed
90	Electrical Power

D. SCADA tag numbering shall be as follows:
   1. Facility = SW
   2. Unit Process = 10
   3. Function of Device = Level Indicating Transmitter
   4. Quantity/Discrete Identifier = 1
      i. E.g. SW_010_LIT_001

1.02 EQUIPMENT TO BE MONITORED AND CONTROLLED

A. The following typical elements at standard unit processes must be monitored and controlled at the various unit processes with alarms as defined:

a. UP 10 Raw Pump Station/Wells

i. Influent Flow Meter

Monitored Data

1. Instantaneous Flow
2. Totalized Daily Flow, Current and Previous Day

Alarms

1. Out of Range
2. No Signal

ii. Pumps

Monitored Data

1. Pump Motor Status
2. Level in Pump Station

Alarms

1. Pump Over-Torque
2. Pump Fail
3. High Level Alarm
4. High-High Level Alarm
5. Low Level Alarm

b. UP 20 Preliminary Treatment

i. Mechanical Bar Screen/Level Operated (Surface Water)

Monitored Data

1. Motor Status
2. Level in Channel
3. Screw Conveyor Motor Status

Alarms

1. Screen Over-Torque
2. Screen Fail
3. Channel Level High
4. Screw Wash/Press Over-Torque
5. Screw Wash/Press Fail

c. UP 30 Primary Filtration

i. Multimedia/Greensand Filters

Monitored Data

1. Valve Status
2. Pressure Differential

Alarms

1. Valve
2. High Pressure Differential

d. UP 40 Ground Storage

i. Levels/Valves

Monitored Data

1. Ground Storage Tank Levels
2. Calculated Ground Storage Tank Volumes
3. Calculated Rate of Change (gpm) in Storage
4. Raw Storage Tank Levels
5. Calculated Raw Storage Tank Volumes
6. Calculated Rate of Change (gpm) in Raw Water
7. Transfer Pump Wet Well Level
8. Fill Valve Status
9. In/Eff Valves for Tanks Status

Alarms

1. High Ground Storage Level
2. Low Ground Storage Level
3. High Raw Water Storage Level
4. Low Raw Water Storage Level
5. High Wet Well Level
6. Low Wet Well Level
7. Valve Failure

ii. Pumps

Monitored Data

1. Pump Motor Status
2. VFD Speed

Alarms

1. Pump Over-Torque
2. Pump Fail

e. UP 50 Distribution High Service Pumping

i. Pumps

Monitored Data

1. Pump Motor Status
2. VFD Speed
3. Pressure
4. Flow Rate

Alarms

1. Pump Over-Torque
2. Pump Fail
3. Flow Out of Range
4. High Pressure
5. Low Pressure

f. UP 60 Secondary Filtration

i. Slow Sand Filters/Green Sand Filters/Rapid Rate Filters

Monitored Data

1. Backwash Pump and Wash Unit Motor Status
2. Level in Filter
3. Valve Status
4. Total Suspended Solids and/or Nephelometric Turbidity Units

5. Flow Rate

Alarms

1. Pump/Wash Unit Motor Fail
2. Valve Fail
3. High Level
4. Low Level
5. Flow Rate Out of Range

g. UP 70 Pressure Control

i. Instrumentation

Monitored Data

1. Hydopheumatic Tank Liquid Level
2. Pressure
3. Compressor Status

Alarms

1. Low Pressure
2. High Pressure
3. Compressor Fail
4. Low Tank Level
5. High Tank Level

h. UP 80 Chemical Storage and Feed

i. Chemical Feed and Monitoring

Monitored Data

1. pH
2. Effluent Chlorine Residual
3. Sodium Hypochlorite Level/Volume
4. Alum Level/Volume
5. Ferric Chloride Level/Volume
6. Anti-Scalant Level/Volume
7. Potassium Permanganate Level/Volume
8. Sodium Hydroxide Level/Volume
9. Sulfuric Acid Level/Volume
10. Carbon Dioxide Mass
11. Chemical Metering Pump Status
12. Exhaust Fan Status
13. Eye Wash Status

Alarms

1. Effluent pH Out of Range
2. High Chlorine Residual
3. Low Chlorine Residual
4. Chemical Metering Pump Failures
5. Exhaust Fan Failure
6. Eyewash In Use or Failure
7. High Chemical Level
8. Low Chemical Level

i. UP 90 Electrical Power
    i. Electrical Line Power
        Monitored Data
        1. Phase Voltage Difference
        2. Phase Amperage
        3. Tie-Breaker Status
        4. Main Breaker Status
        Alarms
        1. Low Voltage
        2. High Voltage
        3. Loss of Power
    ii. Generator Power
        Monitored Data
        1. Generator Status
        2. Phase Voltage Difference
        3. Phase Amperage
        4. Transfer Switch Status
        Alarms
        1. Low Voltage
        2. High Voltage
        3. Generator Failure
        4. Transfer Switch Failure

1.03 DATA TO BE STORED IN HISTORIAN

A. The following typical data at standard and alarm at unit processes. Historical data shall be stored at a minimum rate of one point every ten seconds, or a change greater than a set dead-band, and shall be stored as defined:
    a. UP 10 Raw Pump Station/Wells
        i. Influent Flow Meter
            Monitored Data
            1. Instantaneous Flow
            2. Totalized Daily Flow, Current and Previous Day
        ii. Pumps
            Monitored Data
            1. Pump Motor Status
            2. Level in Pump Station
            Alarms
            1. Pump Fail
    b. UP 20 Preliminary Treatment
        i. Mechanical Bar Screen/Level Operated (Surface Water)
            Monitored Data
            1. Motor Status
            2. Level in Channel
            3. Screw Conveyor Motor Status

Alarms
1. Screen Fail
2. Screw Wash/Press Fail

c. UP 30 Primary Filtration
   i. Multimedia/Greensand Filters
   Monitored Data
   1. Valve Status
   2. Pressure Differential
   Alarms
   1. Valve Fail

d. UP 40 Ground Storage
   i. Levels/Valves
   Monitored Data
   1. Ground Storage Tank Levels
   2. Calculated Ground Storage Tank Volumes
   3. Raw Storage Tank Levels
   4. Calculated Rate of Change (gpm) in Raw Water
   5. Transfer Pump Wet Well Level
   6. Fill Valve Status
   7. In/Eff Valves for Tanks Status
   Alarms
   1. Valve Failure
   ii. Pumps
   Monitored Data
   1. Pump Motor Status
   2. VFD Speed
   Alarms
   1. Pump Fail

e. UP 50 Distribution High Service Pumping
   i. Pumps
   Monitored Data
   1. Pump Motor Status
   2. VFD Speed
   3. Pressure
   4. Flow Rate
   Alarms
   1. Pump Fail

f. UP 60 Secondary Filtration
   i. Slow Sand Filters/Green Sand Filters/Rapid Rate Filters
   Monitored Data
   1. Backwash Pump and Wash Unit Motor Status
   2. Level in Filter
   3. Valve Status
   4. Total Suspended Solids and/or Nephelometric Turbidity Units

5. Flow Rate

Alarms

1. Pump/Wash Unit Motor Fail
2. Valve Fail

g. UP 70 Pressure Control

i. Instrumentation

Monitored Data

1. Hydopheumatic Tank Liquid Level
2. Pressure
3. Compressor Status

Alarms

1. Compressor Fail

h. UP 80 Chemical Storage and Feed

i. Chemical Feed and Monitoring

Monitored Data

1. pH
2. Chlorine Residual
3. Sodium Hypochlorite Level/Volume
4. Alum Level/Volume
5. Ferric Chloride Level/Volume
6. Anti-Scalant Level/Volume
7. Potassium Permanganate Level/Volume
8. Sodium Hydroxide Level/Volume
9. Sulfuric Acid Level/Volume
10. Carbon Dioxide Mass
11. Chemical Metering Pump Status
12. Exhaust Fan Status
13. Eye Wash Status

Alarms

1. Chemical Metering Pump Failures
2. Exhaust Fan Failure
3. Eyewash In Use or Failure

i. UP 90 Electrical Power

i. Electrical Line Power

Monitored Data

1. Phase Voltage Difference
2. Phase Amperage
3. Tie-Breaker Status
4. Main Breaker Status

Alarms

1. Loss of Power

ii. Generator Power

Monitored Data

1. Generator Status
2. Phase Voltage Difference

3. Phase Amperage
4. Transfer Switch Status

Alarms

1. Generator Failure
2. Transfer Switch Failure

PART 2 – COMPONENTS AND INTEGRATION

2.01 SOFTWARE, PLC, COMPUTERS, and NETWORK COMPONENTS

A. The CONTRACTOR shall purchase and install equipment compatible with the PCU existing SCADA central station equipment.

1. Water treatment facility control systems must utilize GE PAC RX3i PLC components.

2. Water treatment facility SCADA controls must be integrated utilizing iFix with the licenses for the latest version supplied as part of the construction effort. CONTRACTOR must verify and utilize the iFix version currently in use by PCU prior to integrating PLC/SCADA.

3. CONTRACTOR shall provide local servers and historian, including a license for GE Historian, latest version, as part of the construction effort.

4. iFix and Historian licenses must be provided with sufficient tags for at least 30% spare tags.

5. Servers provided will be mapped to PCU network by Owner. Hardware to be provided to Owner at a time scheduled at least two (2) weeks in advance for mapping purposes.

B. SCADA Computer Server equipment shall be as follows:
   1. Primary SCADA server
      i. Dell server or approved equivalent with minimum criteria
      ii. Two Pentium Xeon Hex-Core Processors, 3.0 Ghz min, 12 Mb L3 Cache
      iii. 24 Gb of DDR3 RAM, 1333 MHz, expandable to 128 Mb
      iv. Hard Drives: (2) RAID 1 configuration HD, SAS, SCSI, 15,000 rpm, Hot-Swappable. Size of each drive shall be at least 200% of capacity required for current system implementation.
      v. Multi-use optical drive, 24x, CD-RW/DVD-RW
      vi. Multimedia cards: manufacturer's standard
      vii. Dual Hot-Swappable Power Supplies
      viii. Two IEEE 802.3 network card, dual redundant, 1 GbE
      ix. External 56k modem, V.90 PCI, USB interface, voice and data modem,

as manufactured by US Robotics.
x. Windows Server 2008 R2 Standard Operating System, 5 Client Access Licenses
xi. Keyboard, Video, Mouse module
xii. Proficy iFix Software Run License, Latest Version
xiii. 3-Years Onsite Warranty

2. Backup SCADA server
   i. Dell or approved equivalent
   ii. Pentium Quad-Core Processor, 3.6 Ghz min, 12 Mb L2 Cache
   iii. 16 Gb of DDR3 RAM, 1333 MHz
   iv. Hard Drives: (2) RAID 1 configuration HD, SATA, 7,200 rpm. Size of each drive shall be at least 200% of capacity required for current system implementation.
   v. Multi-use optical drive, 24x, CD-RW/DVD-RW
   vi. Audio Card: manufacturer's standard
   vii. Video Card: capable of running two monitors and software noted
      1. Dual Channel VGA color graphics, 16X transfer rate
      2. 512 Mb DDR3, min
      3. NVIDIA Quadro NVS 300
   viii. Single Power Supply, 500 kW min
   ix. 101-key Enhanced Keyboard
   x. Mouse: two button with thumb wheel, min
   xi. IEEE 802.3 network card, dual redundant, 1 GbE
   xii. Windows Server 2008 R2 Standard Operating System, 5 Client Access Licenses
   xiii. Proficy iFix Development License, Latest Version
   xiv. (2)-47-inch Flat Panel Displays
   xv. 3-Years Onsite Warranty
3. Historian SCADA server
   i. Link with all Historian tags sent to Base One Master Historian
   ii. Dell R710 or approved equivalent
   iii. Dual Pentium Xeon Hex-Core Processor, 3.0 Ghz min, 12 Mb L3 Cache
   iv. 24 Gb of DDR3 RAM, 1333 MHz, expandable to 128 Mb
   v. Hard Drives: (4) RAID 5 configuration HD, SAS, SCSI, 15,000 rpm, Hot-Swappable. Size of drive array shall be at least 200% of capacity required for current system implementation with 5 years of data stored.
   vi. Multi-use optical drive, 24x, CD-RW/DVD-RW
   vii. Multimedia cards: manufacturer's standard
   viii. Dual Hot-Swappable Power Supplies
   ix. IEEE 802.3 network card, dual redundant, 1 GbE
   x. External 56k modem, V.90 PCI, USB interface, voice and data modem, as manufactured by US Robotics.
   xi. Windows Server 2008 R2 Standard Operating System, 5 Client Access Licenses

xii. Keyboard, Video, Mouse module
xiii. Proficy iFix Historian, Latest Version
xiv. Proficy Web Server, Latest Version
xv. 3-Years Onsite Warranty

4. Additional Equipment
   i. Cisco 1 GbE Network Switch
      1. 24 ports, 4 Dual Ports
      2. 4 Dual Port Uplinks Support 1 GbE Upload and Download
      3. Catalyst 2960S series
   ii. 1 KVM Module, Tripplite B040-008-19
   iii. Tripplite 6 kVA UPS
   iv. Network Rack, 42 RU min
   v. Cable Management Unit for Network Rack
   vi. 24" Monitor, ViewSonic VG2436wm or Equal

C. New plants shall have integrated WiFi throughout the facility in accordance with IEEE 802.11. WiFi shall be able to be utilized for remote SCADA access at any unit process in the plant.
   1. Radio propagation studies shall be performed during design and construction of WiFi networks to ensure WiFi is functional at all unit processes.

D. New unit processes shall have decentralized I/O to limit long runs of buried copper communication. Localized OLMs shall be designed and installed with a fiber connection to carry the information to a point local to the PLC. There the data can be converted back into a readable signal for the PLC.

E. CONTRACTOR to perform testing on integrated systems at key stages in the process. At a minimum, Operational Readiness Testing (ORT) and Performance Acceptance Testing (PAT) shall be performed. Factory Testing and Staging Testing may be added at COUNTY or ENGINEER discretion. Minimum testing requirements shall be as follows:

   1. Operational Readiness Test (ORT): Prior to startup test period and PAT, inspect, test, and document that entire Process Instrumentation and Control System (PICS) is ready for operation.

      i. Loop/Component Inspections and Tests:
         1. Check PICS for proper installation, calibration, and adjustment on a loop-by-loop and component-by-component basis.
         2. Provide space on forms for signoff by PICS subcontractor.
         3. Use loop status report to organize and track inspection, adjustment, and calibration of each loop and include the following:
            a. Project name.
            b. Loop number.

c. Tag number for each component.
d. Checkoffs/Signoffs for Each Component:
    i. Tag/identification.
    ii. Installation.
    iii. Termination wiring.
    iv. Calibration/adjustment
e. Checkoffs/Signoffs for the Loop
    i. Field Device Signals Transmitted to the PLCs are Operational: Received/sent, processed, adjusted.

4. Component calibration sheet for each active field component (except simple hand switches, lights, gauges, and similar items) include the following:
    a. Project name.
    b. Loop number.
    c. Component tag number or PLC register address.
    d. Component code number for field device elements.
    e. Manufacturer for field device elements.
    f. Model number/serial number for field device elements.
    g. Summary of Functional Requirements, for Example:
        i. Indicators and recorders, scale and chart ranges.
        ii. Transmitters/converters, input and output ranges.
        iii. Computing elements' function.
        iv. Controllers, action(direct/reverse) and control modes (P&ID).
        v. Switching elements, unit range, differential (fixed/adjustable), reset (auto/manual).
    h. Calibrations, for Example, but not Limited to:
        i. Analog Devices: Actual inputs and outputs at 0,10, 50, and 100 percent of span, rising and falling.
        ii. Other Field Devices: Actual trip points and reset points.
        iii. Controllers: Mode settings (P&ID).
        iv. Actual inputs or outputs of 0, 10, 50, and 100 percent of span, rising and falling.
        v. Space for comments.
    i. Maintain loop status reports, valve adjustment sheets, and component calibration sheets at site and make them available to Engineer at all times.
    j. Test and calibrate all fiber optic data links. Document that the dB links are within specified limits and the data communication is error free at specified baud rates.
    k. These inspections and tests will be spot checked by Engineer.

l. Engineer reviews loop status sheets and component calibration sheets and spot-check their entries periodically, and upon completion of ORT. Correct deficiencies found.

2. Performance Acceptance Tests (PAT):
   i. Once ORT has been completed and facility has been started up, perform a witnessed PAT on complete PICS to demonstrate that it is operating as required by the Contract Documents. Demonstrate each required function on a paragraph-by-paragraph, loop-by-loop, and site-by-site basis.

   ii. Loop-specific and non-loop-specific tests same as required for Factory Testing except that entire installed PICS tested using actual process variables and all functions demonstrated.

   iii. Perform local and manual tests for each loop before proceeding to remote and automatic modes.

   iv. Where possible, verify test results using visual confirmation of process equipment and actual process variable. Unless otherwise directed, exercise and observe devices supplied by others, as needed to verify correct signals to and from such devices and to confirm overall system functionality. Test verification by means of disconnecting wires or measuring signal levels is acceptable only where direct operation of plant equipment is not possible.

   v. Provide updated versions of the following documentation available to Engineer at site, both before and during tests.
      1. One copy of submittals applicable to the equipment to be tested.
      2. One copy of the Drawings and Specifications together with addenda and applicable change orders.
      3. Make one copy of all O&M manuals.

   vi. Specialty Equipment: For certain components or systems provided under this section but not manufactured by PICS Subcontractor, provide services of qualified manufacturer's representative during installation, startup, demonstration testing, and County training. Refer to Article Onsite Services in PICS Subsystems for specific requirements.

   vii. Instruments shall be tested at 0 percent, 25 percent, 50 percent, 75 percent, and 100 percent of scale through wired and wireless communications to the PLC and to the HMI insofar as is practical and

not to put effluent quality at risk.

2.02 INSTRUMENTATION

A. The CONTRACTOR shall purchase and install instrumentation equipment as standardized below. The equipment aligns with what Polk County Utilities currently utilizes. Exact models shall be determined during design:

1. Liquid Level
    i. Pressure – Rosemount 3051
    ii. Ultrasonic – Endress Hauser FMU95 or Siemens SITRAN LU
    iii. Approved Equal
2. Pressure Indicating and Differential Transmitters
    i. Rosemount 3051
    ii. Approved Equal
3. Pressure Switches
    i. Ashcroft B-Series
    ii. Approved Equal
4. Pressure Gauges
    i. Ashcroft
    ii. Approved Equal
5. Flow Meters
    i. Electromagnetic – Foxboro
    ii. Vortex – Foxboro
6. Chemical Metering Pumps
    i. Prominent
7. Chlorine Analyzers
    i. Prominent
8. Hach Transmitters
    i. Hach SC200 or SC1000 depending on number of elements
    ii. Approved Equal
9. pH Element
    i. Prominent – pH sensor
10. Conductivity
    i. Hach
    ii. Approved Equal
11. Motor Operated Valves
    i. Limitorque or Auma Actuators, Valve per Polk County Standards
    ii. Approved Equal

2.03 STANDARD SCREENS

A. The following pages are intended to be standard screens as a basis for creating water treatment facility SCADA pages. The screens shall be used as a basis by both designers and integrators.

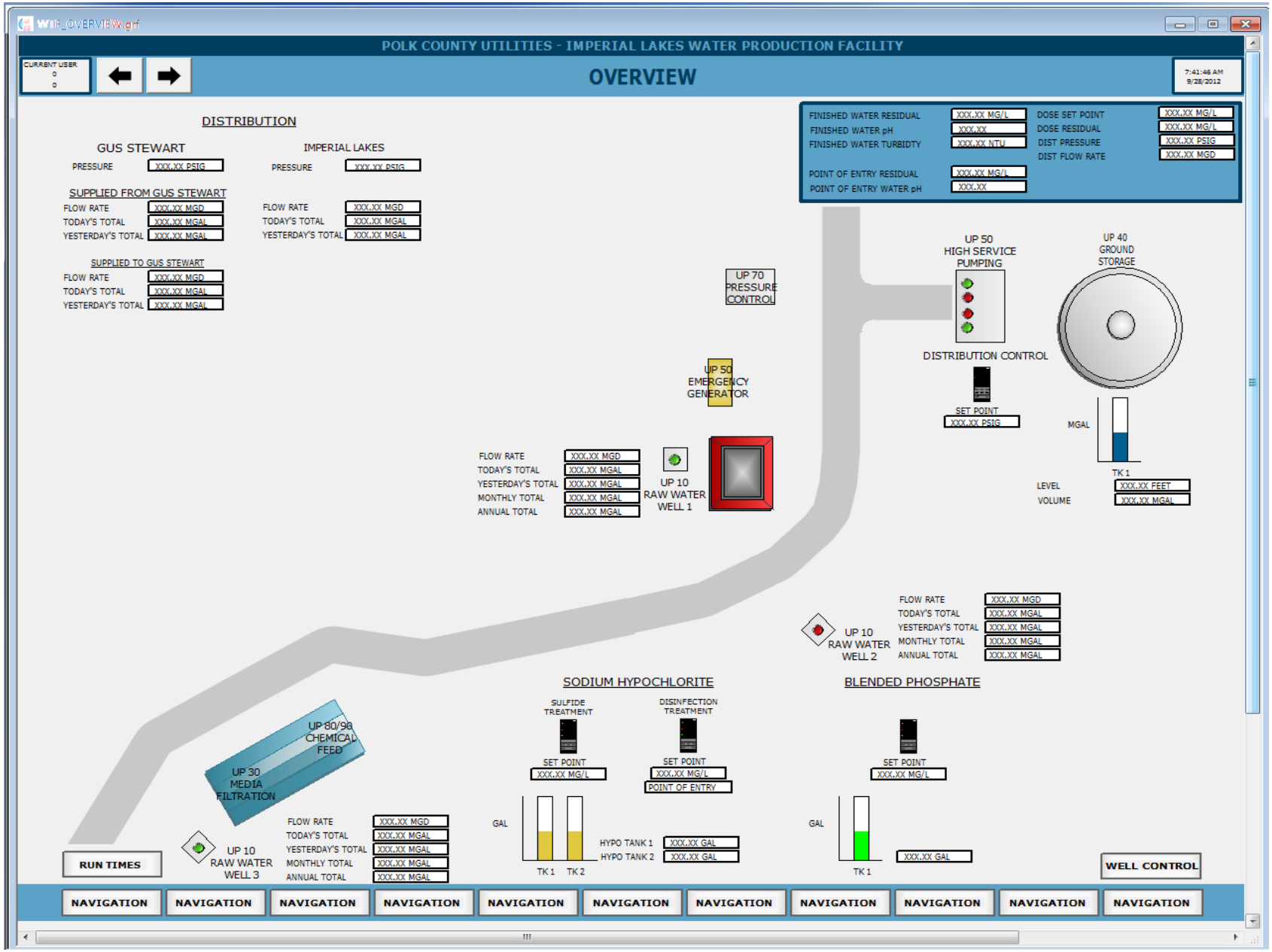
POLK COUNTY UTILITIES - IMPERIAL LAKES WATER PRODUCTION FACILITY
OVERVIEW
DISTRIBUTION
GUS STEWART
IMPERIAL LAKES
PRESSURE
SUPPLIED FROM GUS STEWART
SUPPLIED TO GUS STEWART
FLOW RATE
TODAY'S TOTAL
YESTERDAY'S TOTAL
FINISHED WATER RESIDUAL
FINISHED WATER pH
FINISHED WATER TURBIDTY
POINT OF ENTRY RESIDUAL
POINT OF ENTRY WATER pH
DOSE SET POINT
DOSE RESIDUAL
DIST PRESSURE
DIST FLOW RATE
UP 70 PRESSURE CONTROL
UP 50 HIGH SERVICE PUMPING
UP 40 GROUND STORAGE
DISTRIBUTION CONTROL
SET POINT
MGAL
TK 1
LEVEL
VOLUME
UP 50 EMERGENCY GENERATOR
UP 10 RAW WATER WELL 1
MONTHLY TOTAL
ANNUAL TOTAL
UP 10 RAW WATER WELL 2
SODIUM HYPOCHLORITE
BLENDED PHOSPHATE
SULFIDE TREATMENT
DISINFECTION TREATMENT
POINT OF ENTRY
UP 80/90 CHEMICAL FEED
UP 30 MEDIA FILTRATION
UP 10 RAW WATER WELL 3
GAL
TK 2
HYPO TANK 1
HYPO TANK 2
RUN TIMES
WELL CONTROL
NAVIGATION

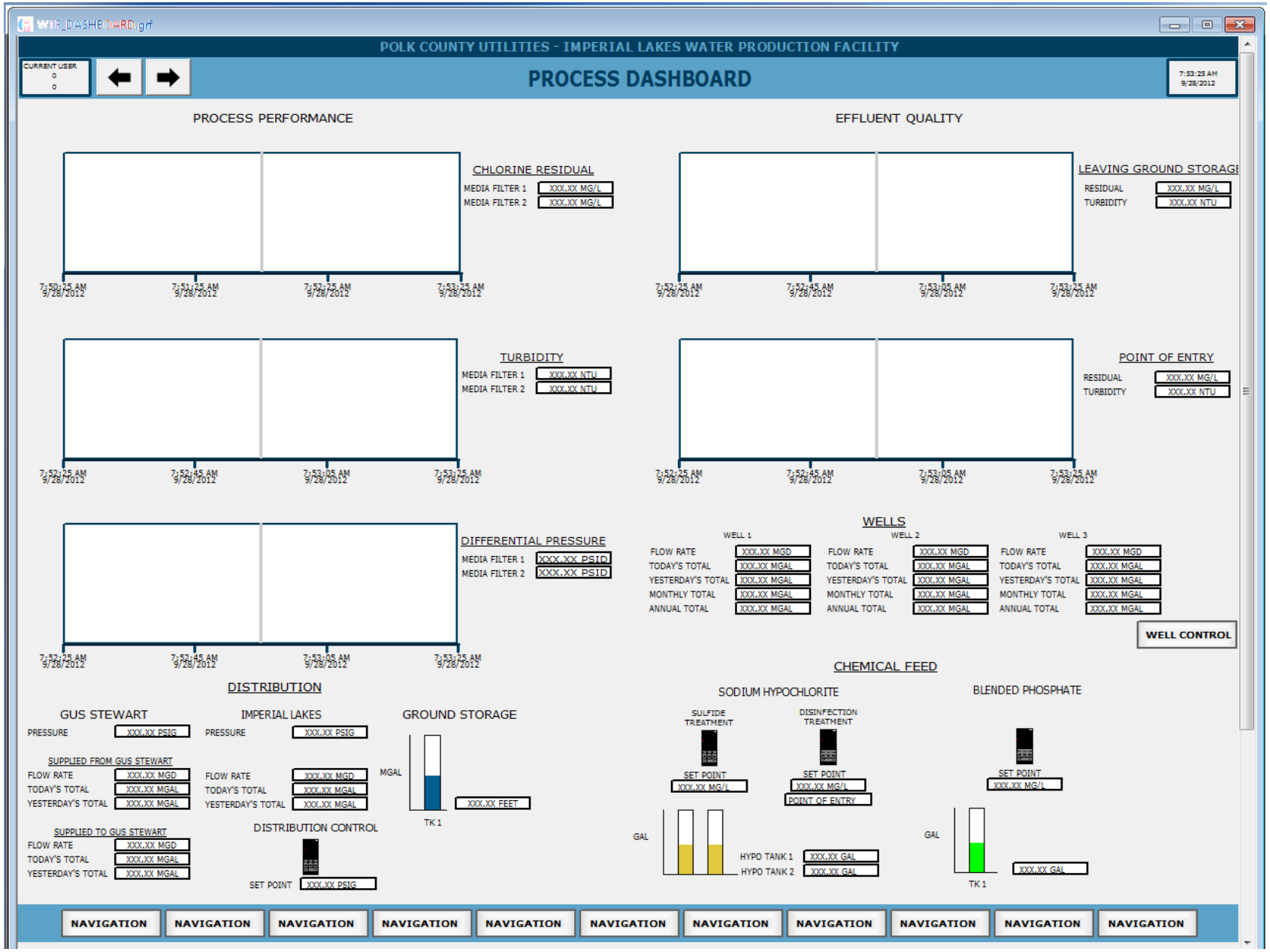
WTR_DASHBOARD.grf
POLK COUNTY UTILITIES - IMPERIAL LAKES WATER PRODUCTION FACILITY
CURRENT USER
PROCESS DASHBOARD
7:53:25 AM
9/28/2012
PROCESS PERFORMANCE
CHLORINE RESIDUAL
MEDIA FILTER 1 XXX.XX MG/L
MEDIA FILTER 2 XXX.XX MG/L
EFFLUENT QUALITY
LEAVING GROUND STORAGE
RESIDUAL XXX.XX MG/L
TURBIDITY XXX.XX NTU
TURBIDITY
MEDIA FILTER 1 XXX.XX NTU
MEDIA FILTER 2 XXX.XX NTU
POINT OF ENTRY
RESIDUAL XXX.XX MG/L
TURBIDITY XXX.XX NTU
DIFFERENTIAL PRESSURE
MEDIA FILTER 1 XXX.XX PSID
MEDIA FILTER 2 XXX.XX PSID
WELLS
WELL 1
WELL 2
WELL 3
FLOW RATE XXX.XX MGD
TODAY'S TOTAL XXX.XX MGAL
YESTERDAY'S TOTAL XXX.XX MGAL
MONTHLY TOTAL XXX.XX MGAL
ANNUAL TOTAL XXX.XX MGAL
WELL CONTROL
DISTRIBUTION
GUS STEWART
PRESSURE XXX.XX PSIG
SUPPLIED FROM GUS STEWART
FLOW RATE XXX.XX MGD
TODAY'S TOTAL XXX.XX MGAL
YESTERDAY'S TOTAL XXX.XX MGAL
SUPPLIED TO GUS STEWART
FLOW RATE XXX.XX MGD
TODAY'S TOTAL XXX.XX MGAL
YESTERDAY'S TOTAL XXX.XX MGAL
IMPERIAL LAKES
PRESSURE XXX.XX PSIG
FLOW RATE XXX.XX MGD
TODAY'S TOTAL XXX.XX MGAL
YESTERDAY'S TOTAL XXX.XX MGAL
DISTRIBUTION CONTROL
SET POINT XXX.XX PSIG
GROUND STORAGE
MGAL
XXX.XX FEET
TK 1
CHEMICAL FEED
SODIUM HYPOCHLORITE
SULFIDE TREATMENT
DISINFECTION TREATMENT
SET POINT XXX.XX MG/L
POINT OF ENTRY
GAL
HYPO TANK 1 XXX.XX GAL
HYPO TANK 2 XXX.XX GAL
BLENDED PHOSPHATE
SET POINT XXX.XX MG/L
GAL
XXX.XX GAL
TK 1
NAVIGATION

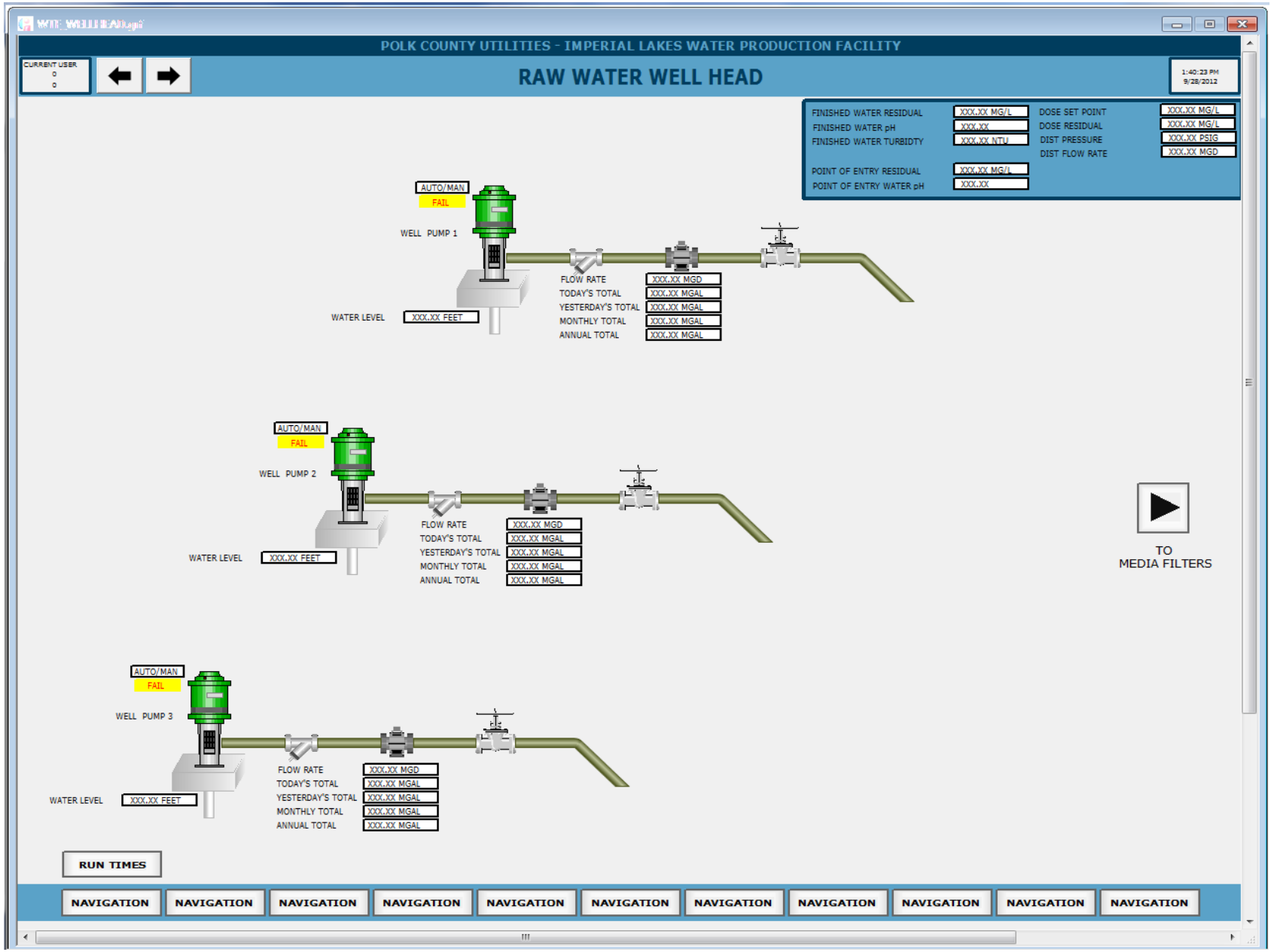
POLK COUNTY UTILITIES - IMPERIAL LAKES WATER PRODUCTION FACILITY
CURRENT USER
0
0
RAW WATER WELL HEAD
1:40:23 PM
9/28/2012
FINISHED WATER RESIDUAL
XXX.XX MG/L
FINISHED WATER pH
XXX.XX
FINISHED WATER TURBIDTY
XXX.XX NTU
POINT OF ENTRY RESIDUAL
XXX.XX MG/L
POINT OF ENTRY WATER pH
XXX.XX
DOSE SET POINT
XXX.XX MG/L
DOSE RESIDUAL
XXX.XX MG/L
DIST PRESSURE
XXX.XX PSIG
DIST FLOW RATE
XXX.XX MGD
AUTO/MAN
FAIL
WELL PUMP 1
WATER LEVEL
XXX.XX FEET
FLOW RATE
XXX.XX MGD
TODAY'S TOTAL
XXX.XX MGAL
YESTERDAY'S TOTAL
XXX.XX MGAL
MONTHLY TOTAL
XXX.XX MGAL
ANNUAL TOTAL
XXX.XX MGAL
AUTO/MAN
FAIL
WELL PUMP 2
WATER LEVEL
XXX.XX FEET
FLOW RATE
XXX.XX MGD
TODAY'S TOTAL
XXX.XX MGAL
YESTERDAY'S TOTAL
XXX.XX MGAL
MONTHLY TOTAL
XXX.XX MGAL
ANNUAL TOTAL
XXX.XX MGAL
TO
MEDIA FILTERS
AUTO/MAN
FAIL
WELL PUMP 3
WATER LEVEL
XXX.XX FEET
FLOW RATE
XXX.XX MGD
TODAY'S TOTAL
XXX.XX MGAL
YESTERDAY'S TOTAL
XXX.XX MGAL
MONTHLY TOTAL
XXX.XX MGAL
ANNUAL TOTAL
XXX.XX MGAL
RUN TIMES
NAVIGATION
NAVIGATION
NAVIGATION
NAVIGATION
NAVIGATION
NAVIGATION
NAVIGATION
NAVIGATION
NAVIGATION
NAVIGATION
NAVIGATION

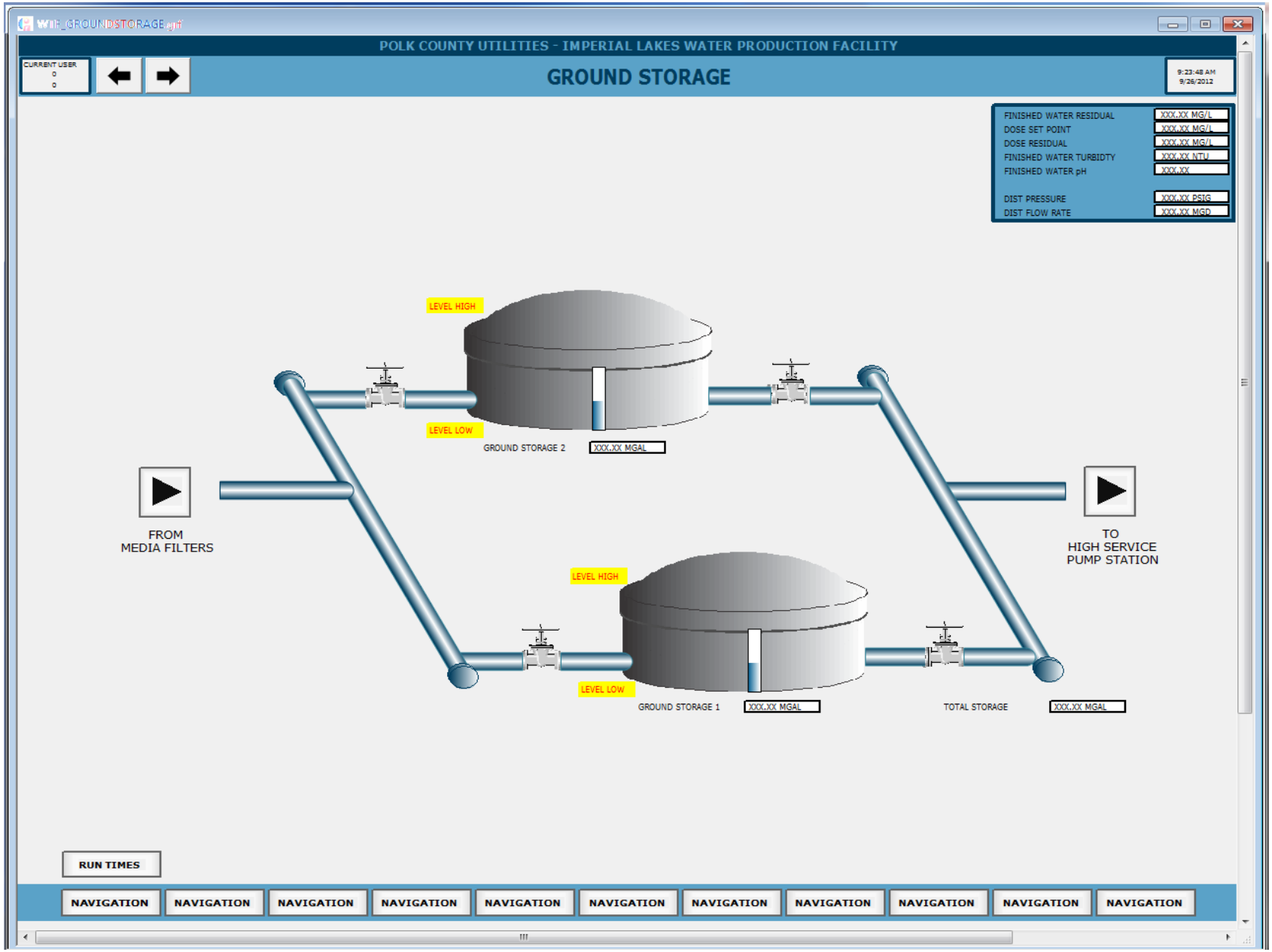
WTP_GROUNDSTORAGE.gpf
POLK COUNTY UTILITIES - IMPERIAL LAKES WATER PRODUCTION FACILITY
CURRENT USER
0
0
GROUND STORAGE
9:23:48 AM
9/26/2012
FINISHED WATER RESIDUAL
XXX.XX MG/L
DOSE SET POINT
XXX.XX MG/L
DOSE RESIDUAL
XXX.XX MG/L
FINISHED WATER TURBIDTY
XXX.XX NTU
FINISHED WATER pH
XXX.XX
DIST PRESSURE
XXX.XX PSIG
DIST FLOW RATE
XXX.XX MGD
LEVEL HIGH
LEVEL LOW
GROUND STORAGE 2
XXX.XX MGAL
FROM
MEDIA FILTERS
TO
HIGH SERVICE
PUMP STATION
LEVEL HIGH
LEVEL LOW
GROUND STORAGE 1
XXX.XX MGAL
TOTAL STORAGE
XXX.XX MGAL
RUN TIMES
NAVIGATION
NAVIGATION
NAVIGATION
NAVIGATION
NAVIGATION
NAVIGATION
NAVIGATION
NAVIGATION
NAVIGATION
NAVIGATION
NAVIGATION

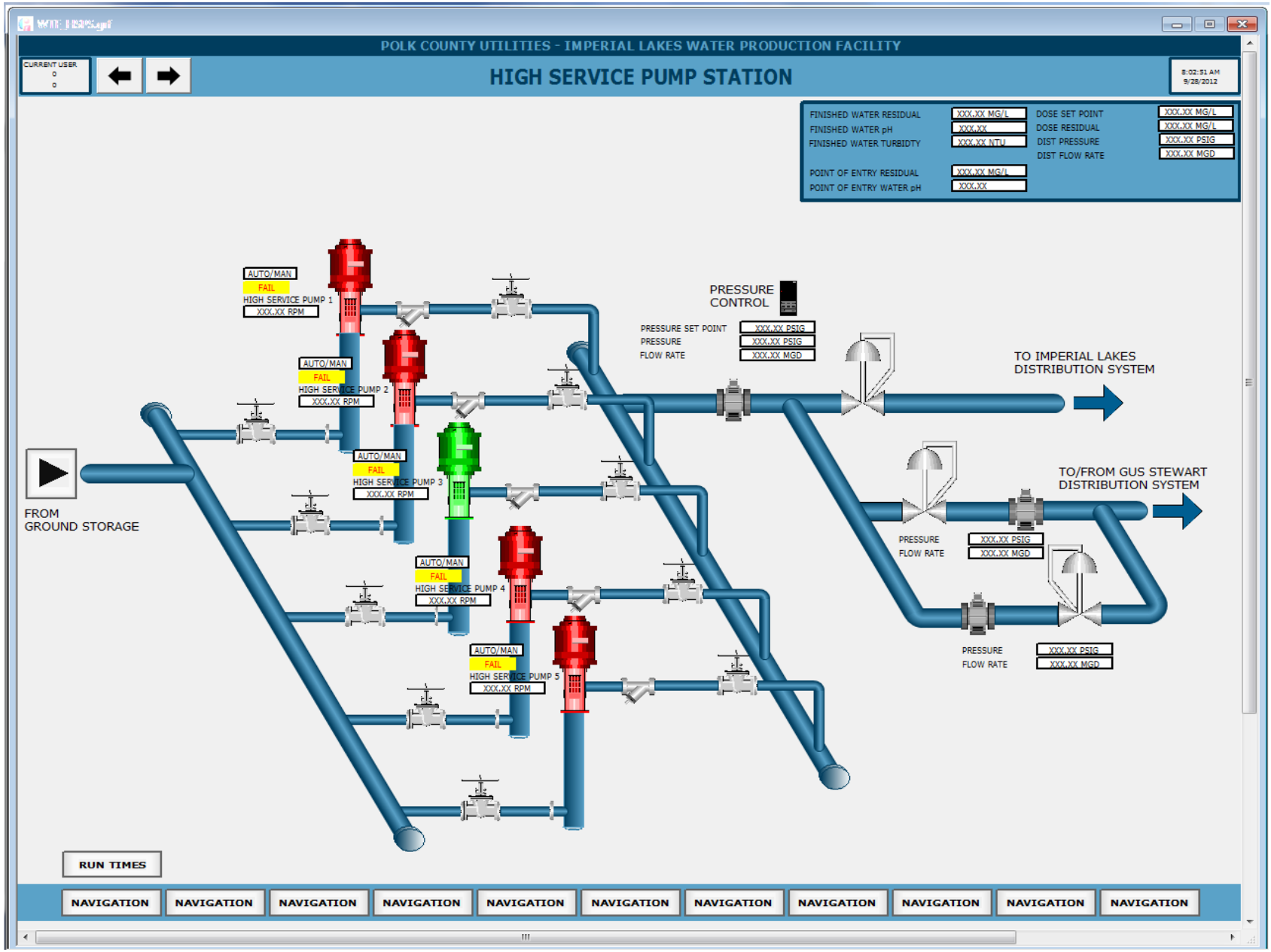
POLK COUNTY UTILITIES - IMPERIAL LAKES WATER PRODUCTION FACILITY
CURRENT USER
0
0
HIGH SERVICE PUMP STATION
8:02:51 AM
9/28/2012
FINISHED WATER RESIDUAL
XXX.XX MG/L
FINISHED WATER pH
XXX.XX
FINISHED WATER TURBIDTY
XXX.XX NTU
POINT OF ENTRY RESIDUAL
XXX.XX MG/L
POINT OF ENTRY WATER pH
XXX.XX
DOSE SET POINT
XXX.XX MG/L
DOSE RESIDUAL
XXX.XX MG/L
DIST PRESSURE
XXX.XX PSIG
DIST FLOW RATE
XXX.XX MGD
AUTO/MAN
FAIL
HIGH SERVICE PUMP 1
XXX.XX RPM
AUTO/MAN
FAIL
HIGH SERVICE PUMP 2
XXX.XX RPM
AUTO/MAN
FAIL
HIGH SERVICE PUMP 3
XXX.XX RPM
AUTO/MAN
FAIL
HIGH SERVICE PUMP 4
XXX.XX RPM
AUTO/MAN
FAIL
HIGH SERVICE PUMP 5
XXX.XX RPM
PRESSURE CONTROL
PRESSURE SET POINT
XXX.XX PSIG
PRESSURE
XXX.XX PSIG
FLOW RATE
XXX.XX MGD
TO IMPERIAL LAKES DISTRIBUTION SYSTEM
TO/FROM GUS STEWART DISTRIBUTION SYSTEM
PRESSURE
XXX.XX PSIG
FLOW RATE
XXX.XX MGD
PRESSURE
XXX.XX PSIG
FLOW RATE
XXX.XX MGD
FROM GROUND STORAGE
RUN TIMES
NAVIGATION
NAVIGATION
NAVIGATION
NAVIGATION
NAVIGATION
NAVIGATION
NAVIGATION
NAVIGATION
NAVIGATION
NAVIGATION
NAVIGATION

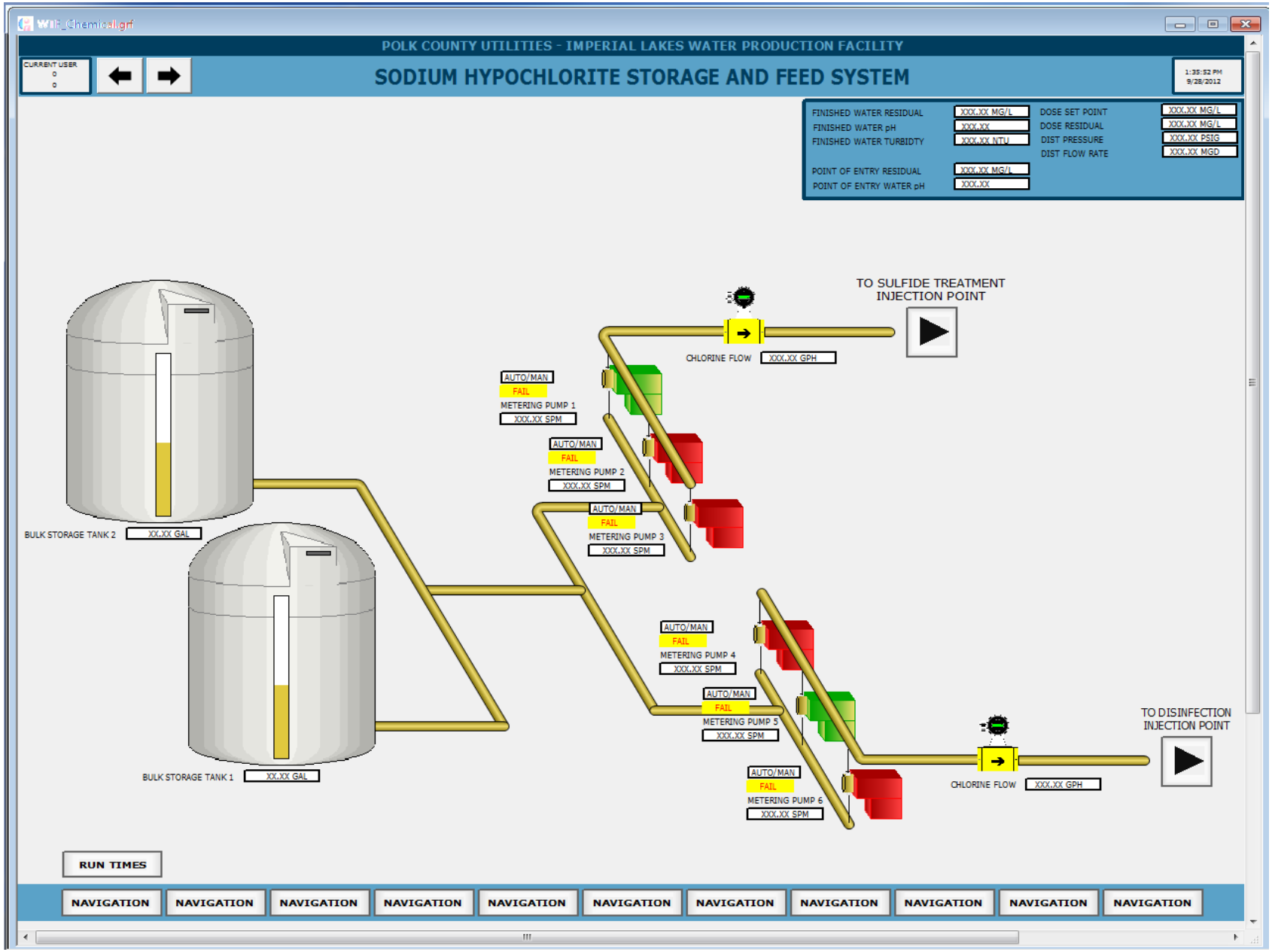
POLK COUNTY UTILITIES - IMPERIAL LAKES WATER PRODUCTION FACILITY
SODIUM HYPOCHLORITE STORAGE AND FEED SYSTEM
CURRENT USER
1:35:52 PM
9/28/2012
FINISHED WATER RESIDUAL
XXX.XX MG/L
FINISHED WATER pH
XXX.XX
FINISHED WATER TURBIDTY
XXX.XX NTU
POINT OF ENTRY RESIDUAL
XXX.XX MG/L
POINT OF ENTRY WATER pH
XXX.XX
DOSE SET POINT
XXX.XX MG/L
DOSE RESIDUAL
XXX.XX MG/L
DIST PRESSURE
XXX.XX PSIG
DIST FLOW RATE
XXX.XX MGD
TO SULFIDE TREATMENT INJECTION POINT
CHLORINE FLOW
XXX.XX GPH
AUTO/MAN
FAIL
METERING PUMP 1
XXX.XX SPM
METERING PUMP 2
XXX.XX SPM
METERING PUMP 3
XXX.XX SPM
METERING PUMP 4
XXX.XX SPM
METERING PUMP 5
XXX.XX SPM
METERING PUMP 6
XXX.XX SPM
BULK STORAGE TANK 2
XX.XX GAL
BULK STORAGE TANK 1
XX.XX GAL
TO DISINFECTION INJECTION POINT
CHLORINE FLOW
XXX.XX GPH
RUN TIMES
NAVIGATION

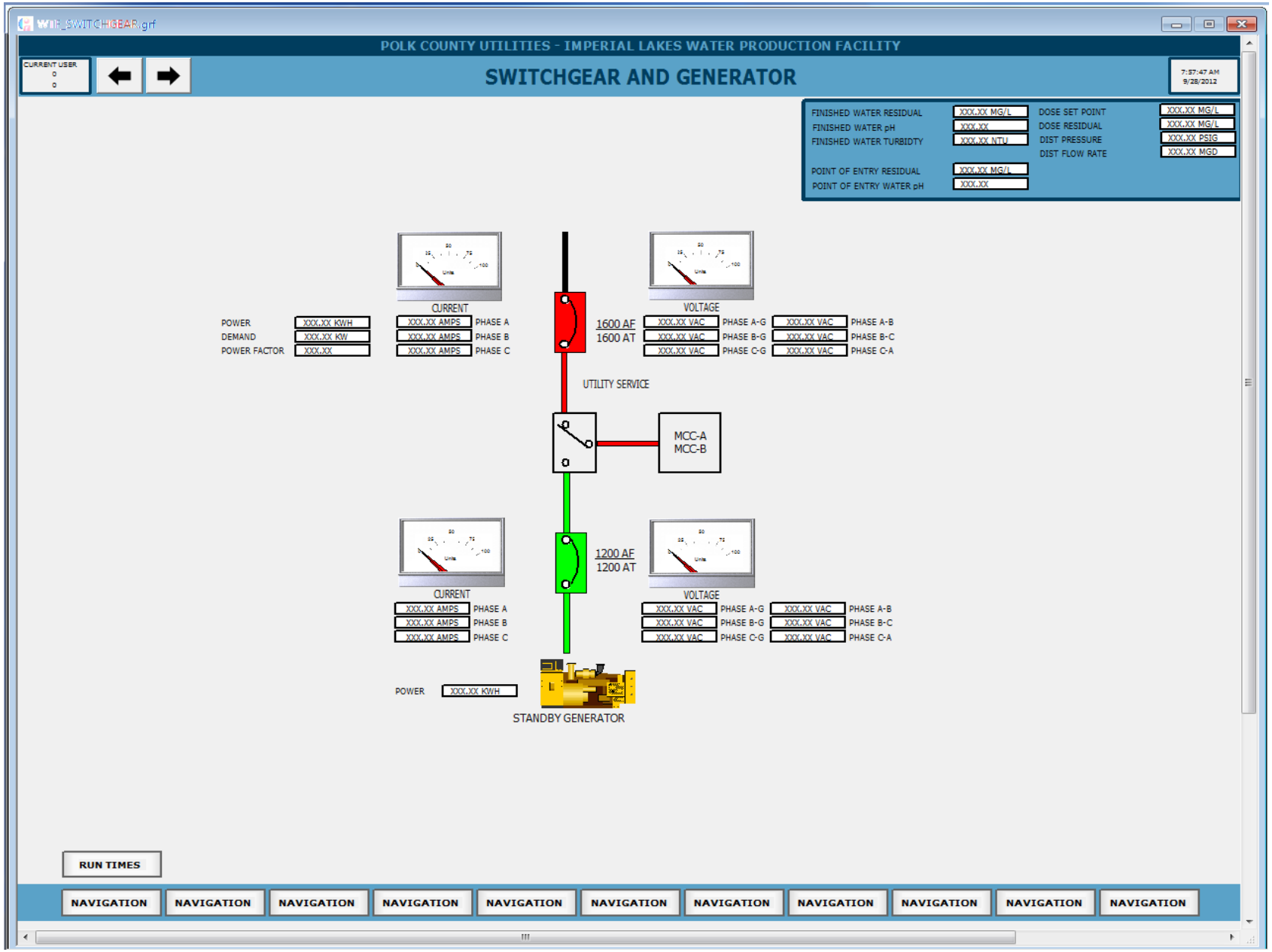
WTR_SWITCHGEAR.grf
POLK COUNTY UTILITIES - IMPERIAL LAKES WATER PRODUCTION FACILITY
CURRENT USER
0
0
SWITCHGEAR AND GENERATOR
7:57:47 AM
9/28/2012
FINISHED WATER RESIDUAL
XXX.XX MG/L
FINISHED WATER pH
XXX.XX
FINISHED WATER TURBIDTY
XXX.XX NTU
POINT OF ENTRY RESIDUAL
XXX.XX MG/L
POINT OF ENTRY WATER pH
XXX.XX
DOSE SET POINT
XXX.XX MG/L
DOSE RESIDUAL
XXX.XX MG/L
DIST PRESSURE
XXX.XX PSIG
DIST FLOW RATE
XXX.XX MGD
CURRENT
POWER
XXX.XX KWH
DEMAND
XXX.XX KW
POWER FACTOR
XXX.XX
XXX.XX AMPS
PHASE A
XXX.XX AMPS
PHASE B
XXX.XX AMPS
PHASE C
1600 AF
1600 AT
VOLTAGE
XXX.XX VAC
PHASE A-G
XXX.XX VAC
PHASE A-B
XXX.XX VAC
PHASE B-G
XXX.XX VAC
PHASE B-C
XXX.XX VAC
PHASE C-G
XXX.XX VAC
PHASE C-A
UTILITY SERVICE
MCC-A
MCC-B
1200 AF
1200 AT
CURRENT
XXX.XX AMPS
PHASE A
XXX.XX AMPS
PHASE B
XXX.XX AMPS
PHASE C
VOLTAGE
XXX.XX VAC
PHASE A-G
XXX.XX VAC
PHASE A-B
XXX.XX VAC
PHASE B-G
XXX.XX VAC
PHASE B-C
XXX.XX VAC
PHASE C-G
XXX.XX VAC
PHASE C-A
POWER
XXX.XX KWH
STANDBY GENERATOR
RUN TIMES
NAVIGATION
NAVIGATION
NAVIGATION
NAVIGATION
NAVIGATION
NAVIGATION
NAVIGATION
NAVIGATION
NAVIGATION
NAVIGATION
NAVIGATION

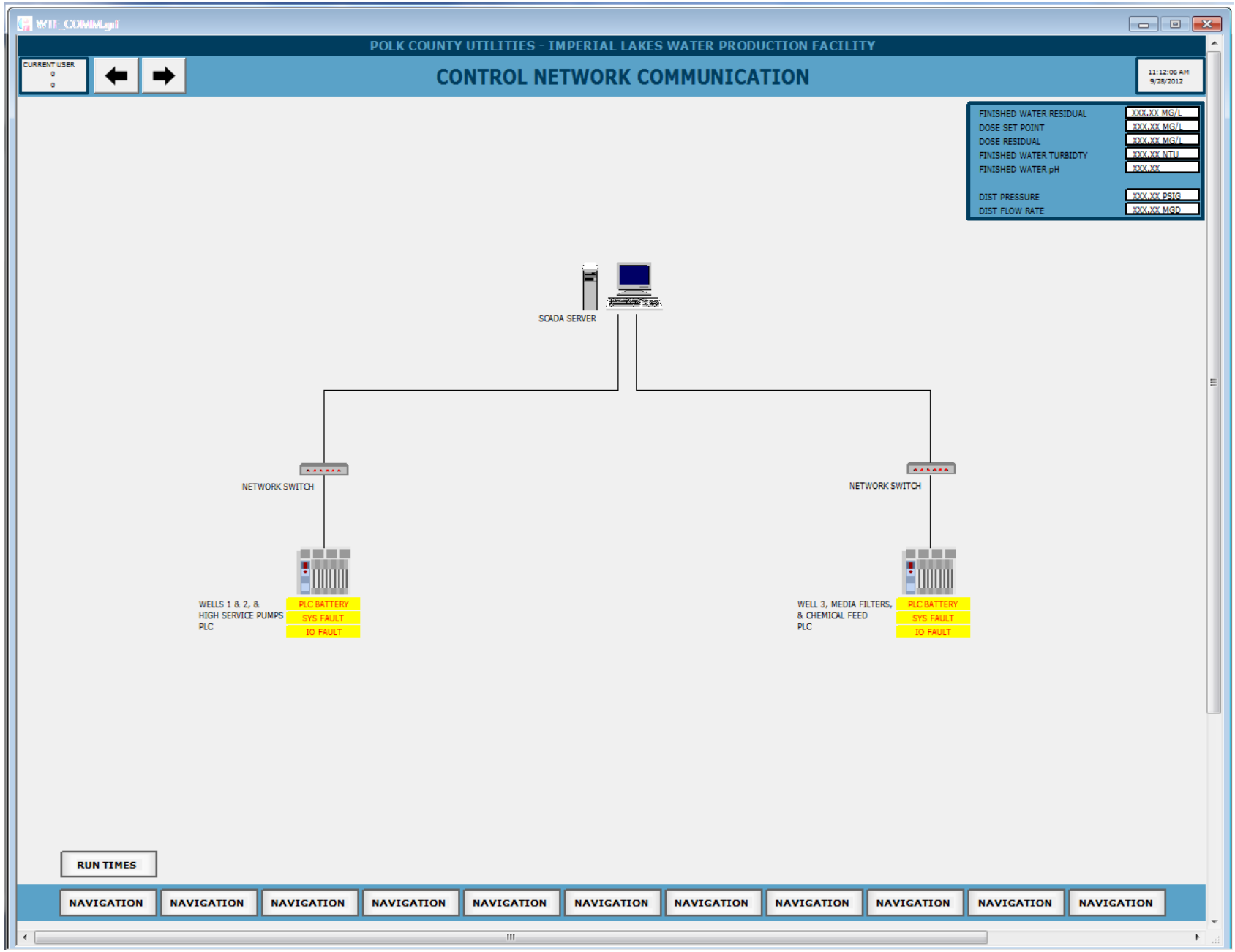
POLK COUNTY UTILITIES - IMPERIAL LAKES WATER PRODUCTION FACILITY
CURRENT USER
0
0
CONTROL NETWORK COMMUNICATION
11:12:06 AM
9/28/2012
FINISHED WATER RESIDUAL
XXX.XX MG/L
DOSE SET POINT
XXX.XX MG/L
DOSE RESIDUAL
XXX.XX MG/L
FINISHED WATER TURBIDTY
XXX.XX NTU
FINISHED WATER pH
XXX.XX
DIST PRESSURE
XXX.XX PSIG
DIST FLOW RATE
XXX.XX MGD
SCADA SERVER
NETWORK SWITCH
NETWORK SWITCH
WELLS 1 & 2, & HIGH SERVICE PUMPS PLC
PLC BATTERY
SYS FAULT
IO FAULT
WELL 3, MEDIA FILTERS, & CHEMICAL FEED PLC
PLC BATTERY
SYS FAULT
IO FAULT
RUN TIMES
NAVIGATION
NAVIGATION
NAVIGATION
NAVIGATION
NAVIGATION
NAVIGATION
NAVIGATION
NAVIGATION
NAVIGATION
NAVIGATION
NAVIGATION

CHAPTER 4 **WATER** Rev December 2012

Section 450 **STANDARD DRAWINGS** December 2010

WA-01-1	Blow Off Valve - Standard
WA-01-2	Blow Off Valve (Above Ground) - Automatic
WA-02	Fire Line Double Check Detector Assembly (4 Inches to 12 Inches)
WA-03	Fire Hydrant Assembly
WA-04-1	Fire Service Master Meter Assembly (Single Cross Connection Control Assembly)
WA-04-2	Fire Service Master Meter Assembly (Double Cross Connection Control Assembly)
WA-05	Meter and Reduced Pressure Zone Cross Connection Control Assembly (Up to 2 Inches)
WA-06	Jumper Connection (Typical)
WA-07-1	Water System Interconnect - Site Plan
WA-07-2	Water System Interconnect – Plan and Section Views
WA-08	Potable Water Irrigation Master Control Assembly (Four Inches and Larger)
WA-09-1	Master Meter Assembly 3” and Larger (Single Cross Connection Control Assembly)
WA-10	Hydraulically Operated Control Valve (Pressure Reducing/Pressure Sustaining)

CHAPTER 4 **WATER** Rev September 2014

Section 450-A **Testing and Inspection for Acceptance** December 2010

PART 1 - GENERAL

1.01 SCOPE OF WORK

A. These specifications cover the testing and inspection for the acceptance of water systems.

B. Hydrostatic tests shall be conducted for pressure pipes, joints, fittings and valves for allowable limits of pressure and leakage. Air testing of pressure pipes will not be permitted under any circumstance.

C. Requests for testing and acceptance of water systems shall follow the procedure in listed in the Section entitled “Field Testing and Inspection Procedures”.

D. The purpose of swabbing a new pipeline is to conserve water while thoroughly cleaning the pipeline of all foreign material, sand, grit, gravel, construction debris and other items not found in a properly cleaned system. Prior to pressure testing and chlorinating of a new pipeline swabbing shall be utilized as specified on the construction plans for each project.

PART 2 - PRODUCTS (NOT USED)

PART 3 - EXECUTION

3.01 TESTS

A. Swabbing

1. All mains shall be hydraulically cleaned with a polypropylene swabbing device to remove dirt, sand, and debris from main.
2. If swabbing access and egress points are not provided in the design drawings, it will be the responsibility of the CONTRACTOR to provide and remove temporary access and egress points for the cleaning, as required.
3. Passage of cleaning poly swabs through the system shall be constantly monitored, controlled, and all poly swabs entered into the system shall be individually marked and identified so that the exiting of the poly swabs from the system can be confirmed.
4. Cleaning of the system shall be done in conjunction with the initial filling of the system for its hydrostatic test.
5. The line to be cleaned shall only be connected to the existing distribution system at a single connection point.
6. The CONTRACTOR shall locate and open all new in-line valves beyond the point of connection on the pipeline to be cleaned during the swabbing operation.
7. At the receiver or exit point for the poly swab, the CONTRACTOR is responsible for creating a safe environment for collection of debris, water, and the swab. The CONTRACTOR shall provide for the protection of surrounding personnel and property and the safe retrieval of the swab.

8. Only PCU personnel shall operate the supply valve from the existing distribution system. Cleaning and flushing shall be accomplished by propelling the swab down the pipeline to the exit point with potable water. Flushing shall continue until the water is completely clear and swab is retrieved.
   a. Re-apply a series of individual swabs in varying diameters and/or densities as required, to attain proper cleanliness of pipeline.
   b. Swabbing speed shall range between two and five feet per second. After the swabbing process, pressure testing and disinfection of the pipe shall be completed in accordance with this MANUAL.

B. Hydrostatic Pressure Testing of Ductile Iron and PVC Pressure Pipe:

Hydrostatic pressure tests shall consist of a pressure test and leakage test for non-butt welded jointed pipes. Hydrostatic tests shall be conducted on all newly laid pressure pipes, joints, and valves including all service lines to the curb stops and fire hydrants assemblies. Testing shall be performed from in-line valve to in-line valve with a depressurized section behind each valve, whenever possible.

1) All pipe sections to be pressure tested shall be subjected to a minimum hydrostatic pressure of 150 psi. The duration of each pressure test shall be for a period of two hours. If during the test, the integrity of the tested line is in question, PCU may require a six-hour pressure test. The basic provisions of AWWA C600 shall be applicable.

2) All testing and the quantity of acceptable leakage shall be documented and certified using the appropriate Pressure Test Form.

3) Water supply from the existing distribution system shall be provided through a jumper connection consisting of fittings, a reduced pressure zone cross connection control assembly, and installed as shown in the STANDARD DRAWINGS.

4) Procedure for Pressure Test:

Pipe to be tested shall be slowly filled with water and the specified test pressure shall be applied by means of a pump connected to the pipe in a satisfactory manner. Provisions shall be made to expel air entrapped in the pipe before applying the specified test pressure. To accomplish this, taps shall be made, and appropriate valves installed to ensure bleeding of all air from the main. If defective pipes, fittings, valves, or hydrants are discovered in consequence of this pressure test, all such items shall be removed and replace by the CONTRACTOR with sound material and the test shall be repeated until satisfactory results are obtained. Provisions of AWWA C600 and C651, where applicable, shall apply.

Rev. December 2012

5) Procedure for Leakage Test:

1. After completion of the pressure test, a leakage test shall be conducted to determine the quantity of water lost by leakage under the specified test pressure. Applicable provisions of AWWA C600 shall apply.

2. Allowable leakage in gallons per hour for pipeline shall not be greater than that determined by the formula:

$$L = \frac{ND(P)^{1/2}}{7{,}400}$$

Note:
L - Allowable leakage in gallons per hour.
N - Number of joints in the tested line.
D - Nominal diameter of the pipe in inches.
P - Average test pressure during leakage test in pounds per square inch gauge.

6) Leakage is defined as the quantity of water to be supplied in the newly laid pipe or any valved off section under test, which is necessary to maintain the specified leakage test pressure after the pipe has been filled with water and the air expelled. Should any test of pipe laid disclose leakage greater than that allowed, the CONTRACTOR shall locate and replace or repair the defective joints, pipe or valve until the leakage from subsequent testing is within the specified allowance.

C. Hydrostatic Pressure Testing of HDPE and Fusible PVC Pressure Pipe:

1) After installation, the butt welded jointed pipe shall be tested in accordance with this MANUAL with the following modifications:

a) Test Duration: The total test time including initial pressurization, initial expansion, and time at test pressure, shall not exceed five hours. If the test is not completed due to leakage, equipment failure, etc., the test section shall be depressurized and allowed to "relax" for a minimum of eight hours before it is brought back up to test pressure.

b) Prior to Hydrostatic Pressure Testing Procedure:

i. Hydraulically clean the main to be tested with a polypropylene swab (pig) to remove dirt, sand, and debris from the main prior to hydrostatic testing.

ii. Insure that main to be tested is restrained against horizontal and vertical movement. Exposing joints only is allowed.

c) Hydrostatic Pressure Testing Procedure:

i. Fill main slowly with water to remove air.

ii. Pressurize up to 1.5 times the Pressure Class of the pipe used at the lowest point of the main being tested.

iii. Maintain for 4 hours while adding water as needed in non-monitored amounts as pipe will expand while until pressure.

iv. Reduce pressure by 10 psi and monitor for 1 hour.

v. Main passes if there are no leaks within 5 percent of the remaining pressure after reduction.

D. The CONTRACTOR shall furnish all necessary equipment and material, make all taps and furnish all closure pieces in the pipe as required. Equipment to be furnished by the CONTRACTOR shall include graduated containers, pressure gauges, hydraulic forces pumps, and suitable hoses and piping. The PCU representative shall monitor a satisfactory test.

E. The CONTRACTOR may conduct preliminary hydrostatic tests after the trench has been partially backfilled with the joints left exposed for inspection for informational purposes only. The hydrostatic tests for acceptance shall only be conducted after the trenches have been completely backfilled and compacted as specified. Where any section of pipe is provided with concrete thrust collar, pressure test will not be made until at least five days have elapsed after the thrust collar is installed.

F. Disinfection:

1) Newly installed mains shall be filled, flushed, and disinfected in accordance with the ANSI/AWWA C651. During the chlorination period, valves, hydrants and appurtenances in the treated section shall be operated to ensure they are disinfected with the new main. Before being placed into service, new mains or extensions to existing mains shall be chlorinated so that the initial chlorine residual is not less than 25 milligrams per liter and that a chlorine residual of not less than 10 milligrams per liter remains in the water after standing 24 hours in the pipe. The free residual chlorine concentration shall be monitored, documented and certified for the initial application and after a 24-hour contact period. The testing/monitoring location points, the disinfection process utilized and free chlorine residuals shall be documented and certified using a PCU approved Disinfection Certification Form.

2) The interior of all pipe and fittings, including couplings and fittings, used in making repairs and connections in shall be swabbed or sprayed with a one percent hypochlorite solution before they are installed.

G. Final Flushing and Testing:

1) Following chlorination, all treated water shall be thoroughly flushed from the new main. If there is any possibility that the chlorinated discharge will cause damage to the environment, then a neutralizing chemical shall be applied to the water to be wasted to thoroughly neutralize the residual chlorine. Flushing shall take place until, upon testing, the free chlorine residual obtained is not in excess of that normally carried in the system.

2) Water samples shall be collected from the approved sampling points. Each sample result shall show acceptable bacteriological results for two consecutive days. The CONTRACTOR shall have all testing conducted by a private laboratory that is certified by the State of Florida.

3) Proper chain of custody procedures must be followed and samples shall only be collected by certified laboratory personnel in the presence of PCU personnel.

4) Copies of testing results and all related correspondence with the FDEP shall be submitted to PCU.

H. The distribution system piping is to remain isolated and out of service until PCU receives clearance from FDEP.

I. Repetition of Flushing and Testing:

Should the initial treatment result in an unsatisfactory bacterial test, the CONTRACTOR shall repeat the original disinfection procedure until satisfactory results are obtained.

PART 4 - ACCEPTANCE

4.01 LOCATE WIRE CHECK

A. The locating wire will be inspected and tested for continuous continuity along the entire length of the main and correct material as specified in the appropriate "Approved Materials Checklist".

B. Valve locations will be inspected for the proper installation of the locating wire in accordance with the STANDARD DRAWINGS and tested for continuity between the main and the valve.

4.02 FIRE HYDRANTS

A. Fire hydrants will be tested for smooth operation. Fire hydrant assemblies shall be inspected for absence of leakage from any ports, joints, and or fittings in the hydrant assembly to the main. PCU shall confirm that hydrants are painted the correct colors as stated in the Section entitled "Potable Water System Standards and Specifications", installed as shown in the STANDARD DRAWINGS, and located in accordance with the RECORD DRAWINGS.

4.03 VALVES

A. Valves will be operated to verify a smooth and correct operation, plus the correct direction of opening. PCU shall confirm the location in accordance with the RECORD DRAWINGS and installed in accordance with the STANDARD DRAWINGS.

4.04 VALVE BOXES

A. Valve boxes will be inspected to ensure they are clear of debris, centered over the operating nut, and installed with a collar as shown in the STANDARD DRAWINGS. The depth of the operating nut will be measured to finished grade to confirm that a riser is installed or not required. Valve boxes shall meet the material standards listed in the appropriate "Approved Materials Checklist".

4.05 SERVICE LINES

A. Service lines shall be properly identified, free from conflicts with any structure, installed as shown in the STANDARD DRAWINGS, and the number location and size is as shown on the RECORD DRAWINGS to serve all intended properties. The materials shall be as listed in the appropriate "Approved Materials Checklist".

4.06 BLOW OFF VALVE ASSEMBLIES

A. Blow off valve assemblies shall be free from any conflicts with any structures, installed in accordance with the STANDARD DRAWINGS, located as shown in the RECORD DRAWINGS and tested to ensure correct operation. The materials shall be as listed in the appropriate "Approved Materials Checklist".

4.07 AUTOMATIC AIR RELEASE VALVE ASSEMBLIES

A. Valve assemblies shall be free from any conflicts with any structures, installed in accordance with the STANDARD DRAWINGS, and located as shown on the RECORD DRAWINGS tested to ensure correct operation and confirm materials as listed in the appropriate "Approved Materials Checklist".

CHAPTER 4 WATER

Section 450-B Approved Materials Checklist December 2010

PLEASE TYPE OR PRINT CLEARLY IN BLACK INK

Project Name: _____

PCU Project File Number: _____

Contractor's Name: _____

Contractor's Address: _____

Contractor's Signature: _____

Engineer's Name: _____

Engineer's Address: _____

PCU Reviewer: _____ Date: _____

Approved: ____ Denied/Resubmit: ____

Comments:
_____
_____
_____
_____
_____
_____

With the submission of this document, the CONTRACTOR understands that the use of the following selected items, as individually indicated by the use of an "X", is mandatory.

Substitutions using other items contained within this Checklist shall be initiated by the CONTRACTOR submitting a revised Checklist to PCU for its review and approval at least 10 calendar days in advance of need.

It is also understood by the CONTRACTOR that PCU shall reject materials and products not in accordance with this document and the MANUAL. Any material or product not contained within this Checklist shall be approved in advance by the Utilities Code Committee in accordance with the provisions of the Utilities Code.

Shop drawings shall be required for all structures and similar items not contained on this checklist, such as manholes, wet wells, and other castings.

Four (4) sets of the CONTRACTOR's and ENGINEER's executed APPROVED MATERIALS CHECKLIST and any necessary shop drawings shall be submitted to PCU for its use and approval, plus the number of sets needed for the CONTRACTOR use. Ordering materials and products without specific written approval from PCU of the submitted list and shop drawings is NOT recommended and is done at the CONTRACTOR's sole expense and responsibility.

NOTE: The latest changes approved by the Utilities Code Committee are indicated by "underlining" and deleted items by "~~strikethroughs~~".

Water Category 1 of 10: VALVES AND ACCESSORIES			
ITEM TO BE USED	**Manufacturer**	**Part Number**	**Comments**
Automatic Combination Air / Vacuum Release Valves:			
	ARI	D-040	Combination
	ARI	S-050	Air Release Only
	ARI	S-010	Air Release Only
	Val-Matic	VM-38	Air Release Only – Plant, Facility Use Only
	Val-Matic	VM-45	Air Release Only – Plant, Facility Use Only
	Val-Matic	VM-200C	Combination – Plant, Facility Use Only
Air / Vacuum Release Valve Enclosure (Horizontal Venting and Medium Blue):			
	Water Plus	131632	
	Channell	BPH 1730	
	Hydro-Guard	Safety-Guard 15100 Low Profile or 02100	
Air / Vacuum Release Valve Vault Frame And Cover:			
	US Foundry	USF-679-BK-M	
	CertainTeed	Pamrex 36"	Alternative – Not to be used in paved roadways.
Blow Off Valve:			
	Hydro Guard	HG-2 Low Profile	Automatic Blow Off (Self-contained unit)
	Water Plus	Series VB 2000	Automatic Blow Off (Self-contained unit)

	Charles Multi-Purpose Housing (CMPH) with individual parts to assemble	Series CMPH 5500 (Enclosure)	Alternative to all-in-one blow off valves. Enclosure color may be Sand Stone or Granite. Assembly required
		Solorain 8014N Programmable Actuator	
		HRC-990-SD-MD Latching Solonoid for HRC 990 Controller	
		HRC-990-04-MS Hydro-Rain 1-4 Zone Battery Controller	
		205T Glove Valve Npt Threads without FC Irritrol	
	Channell Budget Pedestal Housing (BPH) with individual parts to assemble	Series BPH 1230 (Enclosure)	Alternative to all-in-one blow off valves Enclosure color may be Sand Stone or Granite. Assembly required
		Solorain 8014N Programmable Actuator	
		HRC-990-SD-MD Latching Solonoid for HRC 990 Controller	
		HRC-990-04-MS Hydro-Rain 1-4 Zone Battery Controller	
		205T Glove Valve Npt Threads without FC Irritrol	
Butterfly Valves 42-inch And Larger: (8 mil Epoxy Coated, Lined (AWWA), And For On-Site Water Production Facility Use Only):			
	M & H	4500	
	Mueller/Pratt	Linseal III / BV (Ground Hog)	
Butterfly Valves 16-inch And Larger: (Rubber Seated (AWWA):			
	Val-Matic	2000	To be utilized as directed by PCU.
Gate Valves 16-inch Through 48-inch (Resilient Seated Only With Side Actuators):			
	American Flow Control	Series 2500	
	Mueller	Series A-2361	
	M & H	Series 4067	
Gate Valves 12-inch And Smaller (Resilient Seated Only):			
	American Flow Control	Series 2500	
	M & H	Series 4067	
	Mueller	Series A-2360	
	Clow	Series F-6100	

Hydraulically Operated Control Valves (Pressure Reducing/Sustaining Valves):			
	Cla-Val		Model or Series based on field application.
	OCV		Model or Series based on field application.
	Watts/Ames		Model or Series based on field application.
Sample Station (Above Grade) (Blue in Color):			
	Water Plus	Series 301W	May be used as an alternative to the field assembled sample station.
	Hydro-Guard	Safety-Guard SGBSS-05 SS or -06 SS with S300 Enclosure	May be used as an alternative to the field assembled sample station.
Tapping Valves (Resilient Seated Only):			
	American Flow Control	Series 2500	
	M & H	Series 4751	
	Mueller	Series T-2360 & T-2361	
	Clow	Series F-6114	
Insertion Valves - MJ/Ductile Iron RWGV (In Place of Line Stop/Tapping Sleeve)			
	Team Industrial Products	InsertValve	Available 4” through 12”
Test Station Box For Buried Valves:			
	Bingham/Taylor	P200NFG2T	
Valve Boxes with Lids (5¼ -Inch, ASTM A48 30B Cast or Ductile Iron, With “WATER” cast into the lid top):			
	Bingham / Taylor Foundry	4905-X, 4905, 4904L	
	Tyler	Series 6850	
	American Flow Control*	Trench Adapter Models 1 through 9	* For mains with valve nuts that are 6’ or deeper.
	Sigma	VB261, VB262, VB264, VB4650W	
	Mueller	MVB	Use w/ AJBV-4” Locking Bolt
	Star		Heavy Duty Screw or Slip Type

Water Category 2 of 10: SERVICE MATERIALS			
ITEM TO BE USED	**Manufacturer**	**Part Number**	**Comments**
Angle Stops Ball Type (1-inch And 2-inch CTS OD Tubing By 5/8-inch By ¾-inch And 2-inch Meter):			
	Ford	BA43-242W, BFA43-777W	
	Mueller	P24258, P24276	
	McDonald	4642B-22, 4602B-22	
Angle Stops Ball Type (3/4-inch FIP By 5/8-inch By 3/4-inch Meter):			
	Ford	BA13-232W	
	Mueller	B24265R	
	McDonald	4604B	
Corporation Stops Ball Type (1-inch and 2-inch With AWWA Iron Pipe Threads Only/Pack Joint Outlet For CTS):			
	Ford	FB1000	
	Mueller	P25008	
	McDonald	4701B-22	
Curb Stops Straight Valves (Curb Stop To Be Ball Type, Reduced Port FIP By FIP 3/4-inch By 3/4-inch):			
	Ford	B11-233W	
	Mueller	B-20200-R	
	McDonald	6101W	
Curb Stops Straight Valves (Ball Type Compression By Meter, 1-inch And 2-inch CTS OD Tubing By 5/8-inch By ¾-inch Meter):			
	Ford	B43-342W, BF43-777W	
	Mueller	P24350, B24337, B24335	
	McDonald	6100MW-22	
Curb Stops Straight Valves (Ball Type Compression By Compression):			
	Ford	BA44-444W	
	Mueller	P25146	
	McDonald	6100W-22	
Dual Check Valve (Two Independently Acting Spring-Loaded Check Valves)			
	Apollo	4NLF-3C5-5B	For ¾-inch Meter
	Apollo	4NLF-3S6-5B	For 1-inch Meter
Polyethylene Tubing (Blue With UV Protection [SDR-9] 1-inch And 2-inch Only):			
	Endot	PE-4710 EndoPure	

	Endot	PE-4710 EndoTrace	Alternative Pipe and Locating Wire Combo
	Charter Plastics	PE-4710	
	ARNCO	PE-4710 Perma-Guard	
	ARNCO	PE-4710 Perma-Find	Alternative Pipe and Locating Wire Combo
	ADS	CTS PE4710	Service Tubing
Service Saddles (Epoxy Or Nylon Coated Ductile Iron Body with Stainless Steel 18-8-Type 304 Straps, CC Threads – 2-inch To Be Iron Pipe Threads Controlled OD Saddles To Be Used On C-900 And IPS OD PVC Pipe, Double Straps To Be 2-inch Minimum Width Each):			
	Ford	Series FC202	
	JCM	Series 406	
	Mueller	DR2S, DR2SOD	
	McDonald	3855, 3855	
	Cascade	CNS 1, CNS 2	
	Romac	202N	
	Romac	202N-H	For Use With HDPE Pipe
Y Branch (1-inch By 2-inch):			
	Ford	U-48-43	
	Mueller	P15363	
	McDonald	08U2M	
Y Branch Assemblies With Angle Ball Valves (1-inch By 2-inch):			
	Ford	UVB43-42W	
	Mueller	P15363-05	
	McDonald	09U2BW	
Meter Boxes w/ Cast Iron Lids (Black, HDPE):			
	Carson	10152026 (Box) 10151033 (Combo)	10154018 (Lid)
	DFW Alliance	DFW1200-12-Body (Box) DFW1200-12-1C (Combo Unit)	DFW1200-1C-LID (Lid)

Water Category 3 of 10: PIPE MATERIAL			
ITEM TO BE USED	**Manufacturer**	**Part Number**	**Comments**
Casing Spacers (All Sizes) Stainless Steel With Vinyl Runners:			
	Cascade	Series CCS / CCPS / AZ	
	PSI	Series S-G-2	
	PSI-Ranger	Ranger II	
	RACI	S/T, F/G, P/Q, M/N, E/H	
	CCI	CSS8, CSS12	
	Advanced Systems		
Ductile Iron Pipe Cement Lined (4-inch To 12-inch = PC 350, 16-inch To 20-inch= PC 250, 24-inch = PC 200, 30-inch To 64-inch = PC 150) (DI Flanges As Applicable, AWWA C115):			
	American		
	Clow		
	Griffin		
	McWane		
	US Pipe		
Paint: Aerial Pipe, Fittings, And Valves (Field and Factory Primer):			
	Color Wheel	635 Primer Red	
	Glidden	Alkyd Metal Primer	
	Porter/International	286 U-Primer	
	Tnemec	37H-77 Chem-Primer	
	Tnemec	Pota-Pox Plus N140	
	Wasser	Ferro Clad Primer	
Paint: Finish (Exterior):			
	Color Wheel	600 Alkyd Enamel	
	Glidden	Alkyd Industrial Enamel	
	Porter/International	2749 Alkyd Gloss	
	Tnemec	Tnemec - Gloss 2H	
	Tnemec	Pota-Pox 100 Series 22	
PVC (Blue) 4-inch Through 12-inch Pipe (AWWA C-900, DR18) and 16-inch and larger pipe (AWWA C-905 or C-909, DR 25):			
	Bristolpipe	4” to 12”	
	Certainteed	Certa-Lok 4” to 12”	
	Diamond Plastic		
	Ipex		
	JM-Eagle		

	National Pipe		
	NAPCO		North American Pipe Company
	Upinor ETI 9	Ultra Blue-C-909	
	Underground Solutions	Fusible PVC	For Horizontal Directional Drill Use Only
HDPE Pipe DR11 (Blue Striped):			
	Chevron/Phillips	Performance Pipe / ISCO Pipe	
	CSR	Polypipe/Charter Plastics	
	JM-Eagle		
	National Plastics		
	ARNCO		
Potable Water Main Identification Tape (Blue, 6-Inches Wide, 2-Inch High Black Lettering, Adhesive Backed):			
Buried Potable Water Main Warning Tape (Blue, 3-inches Wide, 1-Inch High Black Lettering, Non-Adhesive Backed):			
Locating Wire (Single Strand 14-Gauge Solid Copper Wire with Blue Colored Insulated Covering):			
	Copperhead	Reinforced Locating Wire	Alternative
Locating Marker Systems (Potable Water) (Blue In Color):			
	3M	Scotch Mark EMSII Electronic Marker Blue Locator #1265	
	3M	Scotch Marker Electronic Ball Marker #1404	
Curb and Pavement Markers (Blue in Color, Imprinted With The Words "POLK COUNTY UTILITIES" And "CALL 811 BEFORE YOU DIG" With "POTABLE WATER SERVICE" or "POTABLE WATER VALVE" As Applicable):			
	Rhino	ATAGNCT-C (Custom Imprinting)	New Construction
	Rhino	ATAGRFT-C (Custom Imprinting)	Retrofit to Existing Improvements
	DAS Manufacturing	Reflective Duracast Style (Custom Imprinting)	New Construction or Retrofit

Water Category 4 of 10: PIPE FITTINGS			
ITEM TO BE USED	**Manufacturer**	**Part Number**	**Comments**
Expansion Joints:			
	EBAA Iron		
	Metraflex		
	Star	Star Flex Series 5000, 5100, & 5200	
	Proco		
	Mercer Rubber		
Fittings C153 SSB / C110 Flange (Cement Mortar Lined And Asphaltic Coated In Accordance With C104) (Outside Surfaces Shall Be Prime Coated Only If Located Aboveground And Painted):			
	American		
	Union/Tyler		
	US Pipe		
	Sigma		
	Star Pipe		
Restrained Joints - Ductile Iron Pipe:			
	American	Fast Grip Gasket Flex Ring Field Flex Ring Lok Ring	
	EBAA Iron Inc.	Mega-lug Series 1100 Series 1700 Bell Restrainer Series RS-3800 Restrainer - sleeve included	
	Sigma	One LOK SLD	
	Sigma	LOK Series PVP and PVPF	
	Star	Stargrip Series 3000, 3000S,& 3000OS Series 3100S & 3100P Flange Adapter Series 200 & 400 Retainer Gland Series 600 Series 1000, 1100, & 1200 Adapter Flange Series 3200 & 4200	

	Tyler/Union	Tuf Grip TLD Series 1000, 1000S Tuf Grip Dual Wedge Restraint Series 1500	For DI Pipe Use For PVC, DIP, HDPE pipe use
Restrained Joints - PVC Pipe:			
	EBAA Iron Inc.	Mega-lug Series 2000PV Series 1500 & 1600 Bell Restrainer (4-inch to 12-inch) Series RS-3800 Restrainer – sleeve included	
	JCM	620 Sur-Grip Bell Joint 621 Sur-Grip Bell Joint	
	Uni-Flange/Ford	1350 Bell Restrainer 1360 Bell Restrainer 1390 Bell Restrainer 900 Adapter Flange 1300 Fitting Restrainer 1500 Series	
	Sigma	One LOK SLC	
	Sigma	PV LOK Series PVP and PVPF	
	Star	PVC Stargrip Series 4000 & 4000P PVC Harness Series 1000, 1100, & 1200 Adapter Flange Series 3200 & 4200 Adapter Flange Series 200 & 400	
	Tyler/Union	Tuf Grip TLP Series 2000, 2000S Tuf Grip Dual Wedge Restraint Series 1500 Bell Joint Restraints Series 3000: 32U, 33U, 34U, 35U	For PVC Pipe Use For PVC, DIP, HDPE pipe use For PVC Pipe Use
Tapping Sleeves (For All Taps On IPS OD PVC pipe, Including Size On Size (18-8 Type 304 Stainless Steel Body, Flange And Bolts), Flange To Accept Standard Tapping Sleeves):			
	Ford	Series FTSS	
	JCM	Model 432	
	Mueller	Series H-304 S/S	

	Cascade	CST-EX	
	Total Piping Solutions	Triple Tap	
Tapping Sleeves (Mechanical Joint For All Taps On Cast Iron, Ductile Iron, PVC-900 & AC Pipe, All Taps Including Size On Size):			
	American Flow Control	Series 2800	
	Mueller	Series H-615, H-616, H-619	
	JCM	Series 432	
	Total Piping Solutions	Triple Tap	
Tapping Sleeves (Fabricated Steel, Mechanical Joint, Fusion Bonded Epoxy Coated):			
	JCM	Series 414	

Water Category 5 of 10: FIRE HYDRANT ASSEMBLIES			
ITEM TO BE USED	**Manufacturer**	**Part Number**	**Comments**
Fire Hydrants (5 1/4 Inch Valve Opening, Final Exterior Color - Painted International Orange):			
	American Flow Control	B-84-B	
	Kennedy	K81A	
	Mueller	Super Centurion 250	
Anti-Terrorism Valve for Fire Hydrants (5 1/4 Inch Valve Opening) (For Installation in New and Existing Non-HS Type Fire Hydrants):			
	Davidson	ATV	To be utilized as directed by PCU for potable water system security purposes.

Water Category 6 of 10: VALVES AND ACCESSORIES (PLANTS AND REMOTE FACILITIES)			
ITEM TO BE USED	**Manufacturer**	**Part Number**	**Comments**
Automatic Combination Air / Vacuum Release Valves:			
	Val-Matic	VM-38	Air Release Only – Plant, Facility Use Only
	Val-Matic	VM-45	Air Release Only – Plant, Facility Use Only
	Val-Matic	VM-200C	Combination – Plant, Facility Use Only
Gate Valves, Butterfly Valves			

	DeZurik	BAW Series Butterfly	According to Application.
	DeZurik	Knife Gate Valve	According to Application
	Val-Matic	American BFV Butterfly	According to Application.
	Val-Matic	Ductile Iron RSGV	According to Application.
Valve Actuators			
	Beck	Model 11	Remote Indication or Position Display According to Application
	Auma	SA	Remote Indication or AumaMatic, According to Application
Hydraulically Operated Control Valves (Pressure Reducing/Sustaining Valves):			
	Cla-Val		Model or Series based on field application.
	OCV		Model or Series based on field application.
	Watts/Ames		Model or Series based on field application.

Water Category 7 of 10: PUMPS, CHEMICAL FEED SYSTEMS			
ITEM TO BE USED	**Manufacturer**	**Part Number**	**Comments**
Vertical Turbine			
	Goulds		
	Flowserve	VIC, VIT, SMVT, or DWT	based on application.
	Deming		(AKA: Process Systems, Inc.)
	National		
Centrifugal/Split Case			
	Aurora		
	Flowserve		
	Goulds		
Chemical Pumps			
	Prominent		Appropriate series based on flow rate. Degassing heads for NaOCl.
Skid, Shelf Mounted Feed Systems			

	Blue Planet		Utilize "Polk County" junction box with hour meter/operating indication.
Chemical Tanks			
	Snyder	Captor/Dual Containment	HDLPE with NaOCl Resin
	Poly Processing Co.	Saf-T tank,	XLPE with OR 1000 Inner Coating

Water Category 8 of 10: TANKS and GENERATORS			
ITEM TO BE USED	**Manufacturer**	**Part Number**	**Comments**
Pre-stressed Concrete Tanks			
	Crom		
	Pre-con		
Hydro-pneumatic			
	Modern Welding		15,000 gallons unless otherwise determined by PCU. All coatings shall be approved by Polk County Utilities in accordance with NSF, AWWA, FDEP or other recognized authority for potable water service.
Standby Power Generators			
	Kohler		3-Ph, 480V Diesel
	Caterpillar		3-Ph, 480V Diesel
	Cummins		3-Ph, 480V Diesel
Fuel Tanks (Stand-alone)			
	Convault		Pneumercator level/leak detection systems also required. LC 1000 w/ LS600 and LS610.
	Modern Welding		Pneumercator level/leak detection systems also required. LC 1000 w/ LS600 and LS610.

	Phoenix		Pneumercator level/leak detection systems also required. LC 1000 w/ LS600 and LS610.

Water Category 9 of 10: FLOW METERS			
ITEM TO BE USED	**Manufacturer**	**Part Number**	**Comments**
Flow Meters (Electro-magnetic)			
	Siemens	Sitrans FM Mag, 5000 series unless using bussed network.	
	ABB	WaterMaster Series	
	Foxboro	9100A w/ IMT 25	

Water Category 10 of 10: ELECTRICAL			
ITEM TO BE USED	**Manufacturer**	**Part Number**	**Comments**
VFDs, Relays, Breakers			
	Schneider-Electric	Square D	
Security/Surveillance System			
	Axis		Camera/Equipment
	Bosch		Camera/Equipment
	Pelco		Camera/Equipment
	Exaqvision		Software

CHAPTER 4 WATER

Section 450-C Water Hydraulic Modeling Standards

December 2010

Water Main Design Criteria		
Maximum Velocity	6 fps	
Minimum Transmission Pressure	40 psi	Peak Hour
Maximum Transmission Pressure	100 psi	
Minimum Distribution Pressure	40 psi	Peak Hour
	20 psi	Residential Max. Day + Fire
	20 psi	Commercial Max. Day + Fire
Hazen Williams Friction Coefficient (C) New	130	All existing and future pipe materials (Nominal ID)
Peaking Factors		
Peak Hour	4.0	
Maximum Day	2.25	
System Fire Flow Criteria		
Low Density - Residential	750 gpm	2 hour duration
Commercial / Industrial / High Density Residential	2,000 gpm	4 hour duration
Water Treatment Facility Capacity		
Wells (Treatment) Capacity	Greater of	• Max. Day with Firm Capacity (one well out of service) • Approximately 75% of Total Well Capacity Utilized
Storage	Greater of	• [(Max. Day + Fire Flow) – (Wells on Standby Power)] x 4 hrs • (Peak Hour) x 2 hrs • [(Peak Hour) – (Wells on Standby Power)] x 4 hrs
High Service Pumping Capacity	Includes Maximum	• Max. Day + Fire Flow with largest pump out of service • Peak Hour with largest pump out of service
Remote Storage and Pumping Capacity		
Storage	Greater of	• [(Max. Day + Fire Flow) – (Wells on Standby Power)] x 4 hrs • [(Peak Hour) – (Wells on Standby Power)] x 4 hrs
High Service Pumping Capacity	Includes Maximum	• Max. Day + Fire Flow with largest pump out of service • Peak Hour with largest pump out of service

CHAPTER 4 **WATER** Rev September 2014

Section 450-D **Approved Meters List** December 2010

PCU approved meters that are 3/4 inch through 2 inch shall be provided and installed by PCU in accordance with the Utilities Administration Manual. For all other sizes, PCU approved meters shall be selected in accordance with this List, purchased privately, and installed by the CONTRACTOR in accordance with this Manual. All meters, regardless of manufacturer, shall come equipped with Master Meter AMR Registers.

Reclaimed water meters shall be equipped with purple register faces and meter lids, as a minimum.

Fire Service Type ~~Compound~~ Meters that are 4 inch and larger shall be utilized when a development has a combined Domestic and Fire Suppression Water System.

In general, 2 inch and larger Turbine Type Meters shall not be considered in lieu of similar size Compound Meters without full justification.

Ratio = Equivalent Residential Connection Ratio MCD = Max Continuous Demand

Unless otherwise stated, the Maximum Continuous Demand flow is based on AWWA standards.

NOTE: All strainers shall be designed and manufactured by each meter manufacturer for its specific meter.

METER SIZE	METER TYPE	RECOMMENDED APPLICATION	APPROVED METER
3/4"	Multi-Jet	Small to Medium House, Individual Apartment, and Small Business. Ratio: 1.0 MCD: ≤20 GPM	1) Master Meter BLMJ B13-A31-A01-0101A-1
1"	Multi-Jet	Medium Apartment Bldg., Gas Station, Salon, Small Motel, and Small Business. Ration: 2.5 MCD: ≤50 GPM	1) Master Meter BLMJ B16-A31-A01-0101A-1
1 1/2"	Multi-Jet	Medium Motel, Medium Hotel,	1) Master Meter IMJ M22-A00-A01-0101A-1

		Large Apartment Bldg., Small to Medium Business, and Small Industry. Ratio: 5.0 MCD: ≤100 GPM	
2"	Multi-Jet	Medium to Large Hotel, Medium to Large Motel, Medium to Large Apartment Complex, Medium to Large Business, and Small to Medium Industrial Plant. Ratio: 8.0 MCD: ≤160 GPM	1) Master Meter IMJ M24-A00-A01-0101A-1
2"	Turbine	Industrial Plant and Irrigation. Ratio: 8.0 MCD: ≤160 GPM	1) Master Meter MMT T31-A1-A02-0101A-1
2"	Ultra Sonic	Medium Hotel, Medium Motel, School, Public Building, Large Apartment Complex, Large Condo Complex, and Hospital. Ratio: 8.0 MCD: ≤160 GPM	1) Master Meter Octave O302-E1-A01

3"	Turbine	Industrial Plant and Irrigation. Ratio: 17.5 MCD: ≤350 GPM	1) Master Meter MMT T32-A1-A02-0101A-1
3"	Ultra Sonic	Medium Hotel, Medium Motel, School, Public Building, Large Apartment Complex, Large Condo Complex, and Hospital. Ratio: 16.0 MCD: ≤320 GPM	1) Master Meter Octave O303-E1-A01
4"	Turbine	Large Industrial Plant, and Irrigation Ratio: 30.0 MCD: ≤600 GPM	1) Master Meter MMT T33-A1-A02-0101A-1
4"	Ultra Sonic	Medium Hotel, Medium Motel, School, Public Building, Large Apartment Complex, Large Condo Complex, and Hospital. Ratio: 25.0 MCD: ≤500 GPM	1) Master Meter Octave O304-E1-A01

6”	Turbine	Large Industrial and Manufacturing Plant, and Irrigation. Ratio: 62.5 MCD: ≤1250 GPM	1) Master Meter MMT T34-A1-A02-0101A-1
6"	Ultra Sonic	Medium Hotel, Medium Motel, School, Public Building, Medium to Large Apartment Complex, Large Condo Complex, and Hospital. Ratio: 50.0 MCD: ≤1000 GPM	1) Master Meter Octave (Strainer) O305-E1-A01
8"	Turbine	Industrial and Manufacturing Plant. Ratio: 90.0 MCD: ≤1800 GPM	1) Master Meter MMT T35-A1-A02-0101A-1
8"	Ultra Sonic	Medium Hotel, Medium Motel, School, Public Building, Medium to Large Apartment Complex, Large Condo Complex, and Hospital. Ratio: 80.0 MCD: ≤1600 GPM	1) Master Meter Octave (Strainer) O306-E1-A01

10"	Turbine	Industrial and Manufacturing Plant Ratio: 145.0 MCD: ≤2900 GPM	1) Master Meter MMT W36-E1-A02-0101A-1
10"	Ultra Sonic	Medium to Large Hotel, Medium to Large Motel, School, Public Building, Large Apartment Complex, Large Condo Complex, and Hospital. Ratio: 110.0 MCD: ≤2200 GPM	1) Master Meter Octave (Strainer) O307-E1-A01
12"	Turbine	Industrial and Manufacturing Plant. Ratio: 250.0 MCD: ≤5000 GPM	1) Master Meter MMT W37-E1-A02-0101A-1
12"	Ultra Sonic	Medium to Large Hotel, Medium to Large Motel, School, Public Building, Large Apartment Complex, Large Condo Complex and Hospital. Ratio: 140.0 MCD: ≤2800 GPM (Calculated)	1) Master Meter Octave (Strainer) O308-E1-A01

CHAPTER 4 **WATER** Rev March 2012

Section 450-E **Water System Hydrostatic Pressure Test Report (PVC and Ductile Iron Pipe)** December 2010

Project: _____

PCU Project No.: _____

Procedures for conducting this test shall be in strict conformance with AWWA standard C600, latest revision. Maximum allowable leakage shall be: $L = \frac{ND(P)^{1/2}}{7,400}$

Where:
L = maximum allowable leakage, measured in gallons per hour
N = number of joints in the tested line (where a pipe joins a pipe or a pipe joins a fitting)
D = nominal diameter of pipe, measured in inches
P = test gauge pressure, measured in pounds per square inch (minimally 150 psi)
(For a 2-hour test at 150 psi, equation simplifies to: L = ND x 0.00331)

TESTING PARAMETERS & SYSTEM INFORMATION

Test Pressure (minimally 150 psi):			psi
Beginning Test Pressure:	psi	Ending Test Pressure:	psi
Test Duration (minimally 2 hours):		Hours:	
Date of Test:			
Time at Start of Test:		Time at End of Test:	
Test Segment Location:			

Pipe Type	Diameter, inches	Length, feet	Number of joints	Max. Leakage for 2 Hour Test, gallons
Total Maximum Allowable Leakage, gallons:				
Total Actual Leakage, gallons:				

CONTRACTOR & INSPECTOR PERSONNEL INFORMATION

	Contractor	Inspector
Signature:		
Printed Name:		
Company Name:		
Phone Number:		
Date:		

CHAPTER 4 WATER

Section 450-F Water System Hydrostatic Pressure Test Report (HDPE Pipe) December 2010

Project: _____

PCU Project No.: _____

Procedures for conducting this test shall be in accordance with ASTM F 2164 and AWWA Standard C600, latest revision, where applicable. Pneumatic Testing is strictly prohibited.

Prior to Hydrostatic Pressure Testing Procedure:

1) Hydraulically clean the main to be tested with a polypropylene swab (pig) to remove dirt, sand, and debris from the main prior to hydrostatic testing.
2) Insure that the main to be tested is restrained against horizontal and vertical movement. Exposure of end connection joints only may be allowed.

Hydrostatic Pressure Testing Procedure:

1) Fill main slowly with water to remove air.
2) Pressurize up to 1.5 times the Pressure Class of the pipe used at the lowest point of the main being tested.
3) Maintain for 4 hours while adding water as needed in non-monitored amounts as pipe will expand while until pressure.
4) Reduce pressure by 10 psi and monitor for 1 hour.
5) Main passes if there are no leaks within 5 percent of the remaining pressure after reduction.

Disinfection is to be performed in accordance with AWWA Standard C651.

TESTING PARAMETERS & SYSTEM INFORMATION

Calculated Test Pressure:			psi
Beginning Test Pressure:	psi	Ending Test Pressure:	psi
Test Duration (minimally 5 hours):		Hours:	
Date of Test:			
Time at Start of Test:		Time at End of Test:	

Diameter, inches	Length, feet	Pressure Class, psi	Test Segment Location

CONTRACTOR & INSPECTOR PERSONNEL INFORMATION

	Contractor	Inspector
Signature:		
Printed Name:		
Company Name:		
Phone Number:		

CHAPTER 4 WATER

Section 450-G Water System Pigging Report December 2010

Project: _____

PCU Project No.: _____

Procedures for pigging the system shall be in strict conformance with the Polk County Utilities Standards and Specifications Manual.

PIGGING PARAMETERS & SYSTEM INFORMATION

Date of Pigging:			
Time at Start of Pigging		Time at End of Pigging:	
Pigged Segment Location:			
Pig Outside Diameter:		Pig's Maximum % Compression of Full Size:	
Pig Exterior Material Composition:		Pig Interior Material Composition:	
Pig Manufacturer:			

Pipe Type	Diameter, inches	Length, feet	Number of Times Pigged	Estimated Amount of Water Used for Pigging, gallons
Total Estimated Amount of Water Used for Pigging, gallons:				
Total Actual Amount of Water Used for Pigging, gallons:				

CONTRACTOR & INSPECTOR PERSONNEL INFORMATION

	Contractor	Inspector
Signature:		
Printed Name:		
Company Name:		
Phone Number:		
Date:		

CHAPTER 4 WATER

Section 450-H Fire Hydrant Flow Test Form December 2010

Call 863-298- 4265 to coordinate a fire hydrant flow test with the PCU Distribution and Collection Manager. The Manager shall schedule a test for the next available date, usually within 5 business days. The Developer/Design Engineer shall hire a qualified fire protection contractor or engineer to perform this test. Engineers can be found in the phone book under "Fire Protection". Contractors can be found under "Fire Hydrants"

Tests will only be performed between 10:00 am and 2:00 pm, Monday through Friday

DATE:_____ TIME:_____ AM PM

PROJECT NAME: _____ PCU PROJECT #: _____

PCUD WATER SYSTEM NE NW SW Central East SE

A MINIMUM OF TWO HYDRANTS SHALL BE USED (attach sketch of hydrant locations)

HYDRANT #1 LOCATION _____ ELEV _____

HYDRANT #2 LOCATION _____ ELEV _____

HYDRANT #3 LOCATION (Optional) _____ ELEV _____

HYDRANT PORT SIZE: ___ 2 ½" hose ___ 4" pumper ___ 4 ½" pumper ___ 5 ¼" pumper
(Reminder: measure the port size and choose the proper pitot setting for the port used)

ATTENDEES: _____
(print name) PCU

_____
(print name) FIRM

_____
(print name) FIRM

RESULTS:

TIME	CONDITION	FLOW (gpm)		PRESSURE (psi)		
		Q1	Q2	P1*	P2*	P3*
	Begin Static	0	0			
	Hydrant 1		0	pitot		
	Hydrant 2	0			pitot	
	Hydrant 1+2**			pitot	pitot	
	End Static	0	0			

* Denotes pressure at Hydrant #

** Simultaneous test recommended for commercial/industrial/multi-family development.

CHAPTER 4 WATER

Section 450-I Water System Schedule of Values December 2010

Date: _____

Contractor: _____

Project: _____

PCU Project No.: _____

Item No.	Item Description	Qty.	Unit	Unit Cost ($)	Extended Cost ($)
1	Single Service, Long				
2	Single Service, Short				
3	Double Service, Long				
4	Double Service, Short				
5	Blow-Off Assembly, Complete				
6	Fire Hydrant Assembly, Complete Including Branch Valve				
7					
8					
9					
10	4” PVC, AWWA C-900, DR 18, Blue				
11	4” DIP, Pressure Class 350, Cement-Lined, Bituminous Coated				
12	4” Gate Valve Assembly, Complete				
13	4” 11 ¼ Degree Bend, DI, C153, Cement-Lined, Bituminous Coated				
14	4” 22 ½ Degree Bend, DI, C153, Cement-Lined, Bituminous Coated				
15	4” 45 Degree Bend, DI, C153, Cement-Lined, Bituminous Coated				
16	4” 90 Degree Bend, DI, C153, Cement-Lined, Bituminous Coated				
17	4” Tee, CI, C153, Cement-Lined, Bituminous Coated				
18	4” Cross, DI, C153, Cement-Lined, Bituminous Coated				
19					
20	4” HDPE				
21					
22	6” PVC, AWWA C-900, DR 18, Blue				

23	6” DIP, Pressure Class 350, Cement-Lined, Bituminous Coated				
24	6” Gate Valve Assembly, Complete				
25	6” 11 ¼ Degree Bend, DI, C153, Cement-Lined, Bituminous Coated				
26	6” 22 ½ Degree Bend, DI, C153, Cement-Lined, Bituminous Coated				
27	6” 45 Degree Bend, DI, C153, Cement-Lined, Bituminous Coated				
28	6” 90 Degree Bend, DI, C153, Cement-Lined, Bituminous Coated				
29	6” Tee, DI, C153, Cement-Lined, Bituminous Coated				
30	6” Cross, DI, C153, Cement-Lined, Bituminous Coated				
31					
32	6” HDPE				
33					
34	8” PVC, AWWA C-900, DR 18, Blue				
35	8” DIP, Pressure Class 350 Cement-Lined, Bituminous Coated				
36	8” Gate Valve Assembly, Complete				
37	8” 11 ¼ Degree Bend, DI, C153, Cement-Lined, Bituminous Coated				
38	8” 22 ½ Degree Bend, DI, C153, Cement-Lined, Bituminous Coated				
39	8” 45 Degree Bend, DI, C153, Cement-Lined, Bituminous Coated				
40	8” 90 Degree Bend, DI, C153, Cement-Lined, Bituminous Coated				
41	8” Tee, DI, C153, Cement-Lined, Bituminous Coated				
42	8” Cross, DI, C153, Cement-Lined, Bituminous Coated				
43					
44	8” HDPE				
45					
46	10” PVC, AWWA C-900, DR 18, Blue				
47	10” DIP, Pressure Class 350, Cement-Lined, Bituminous Coated				
48	10” Gate Valve Assembly, Complete				

49	10” 11 ¼ Degree Bend, DI, C153, Cement-Lined, Bituminous Coated				
50	10” 22 ½ Degree Bend, DI, C153, Cement-Lined, Bituminous Coated				
51	10” 45 Degree Bend, DI, C153, Cement-Lined, Bituminous Coated				
52	10” 90 Degree Bend, DI, C153, Cement-Lined, Bituminous Coated				
53	10” Tee, DI, C153, Cement-Lined, Bituminous Coated				
54	10” Cross, DI, C153, Cement-Lined, Bituminous Coated				
55					
56	10” HDPE				
57					
58	12” PVC, AWWA C-900, DR 18, Blue				
59	12” DIP, Pressure Class 350, Cement-Lined, Bituminous Coated				
60	12” Gate Valve Assembly, Complete				
61	12” 11 ¼ Degree Bend, DI, C153, Cement-Lined, Bituminous Coated				
62	12” 22 ½ Degree Bend, DI, C153, Cement-Lined, Bituminous Coated				
63	12” 45 Degree Bend, DI, C153, Cement-Lined, Bituminous Coated				
64	12” 90 Degree Bend, DI, C153, Cement-Lined, Bituminous Coated				
65	12” Tee, DI, C153 Cement-Lined, Bituminous Coated				
66	12” Cross, DI, C153, Cement-Lined, Bituminous Coated				
67					
68	12” HDPE				
69					
70	16” PVC, AWWA C-905, DR 25, Blue				
71	16” DIP, Pressure Class 350, Cement-Lined, Bituminous Coated				
72	16” Gate Valve Assembly, Complete				
73	16” 11 ¼ Degree Bend, DI, C153, Cement-Lined, Bituminous Coated				

74	16” 22 ½ Degree Bend, DI, C153, Cement-Lined, Bituminous Coated				
75	16” 45 Degree Bend, DI, C153, Cement-Lined, Bituminous Coated				
76	16” 90 Degree Bend, DI, C153, Cement-Lined, Bituminous Coated				
77	16” Tee, DI, C153 Cement-Lined, Bituminous Coated				
78	16” Cross, DI, C153, Cement-Lined, Bituminous Coated				
79					
80	16” HDPE				
81					
82					
83					
84	18” PVC, AWWA C-905, DR 25, Blue				
85	18” DIP, Pressure Class 350, Cement-Lined, Bituminous Coated				
86	18” Gate Valve Assembly, Complete				
87	18” 11 ¼ Degree Bend, DI, C153, Cement-Lined, Bituminous Coated				
88	18” 22 ½ Degree Bend, DI, C153, Cement-Lined, Bituminous Coated				
89	18” 45 Degree Bend, DI, C153, Cement-Lined, Bituminous Coated				
90	18” 90 Degree Bend, DI, C153, Cement-Lined, Bituminous Coated				
91	18” Tee, DI, C153 Cement-Lined, Bituminous Coated				
92	18” Cross, DI, C153, Cement-Lined, Bituminous Coated				
93					
94	18” HDPE				
95					
96					
97					

Total Constructed Value: $ _____

Reviewer:_____ Date:_____

Comments_____

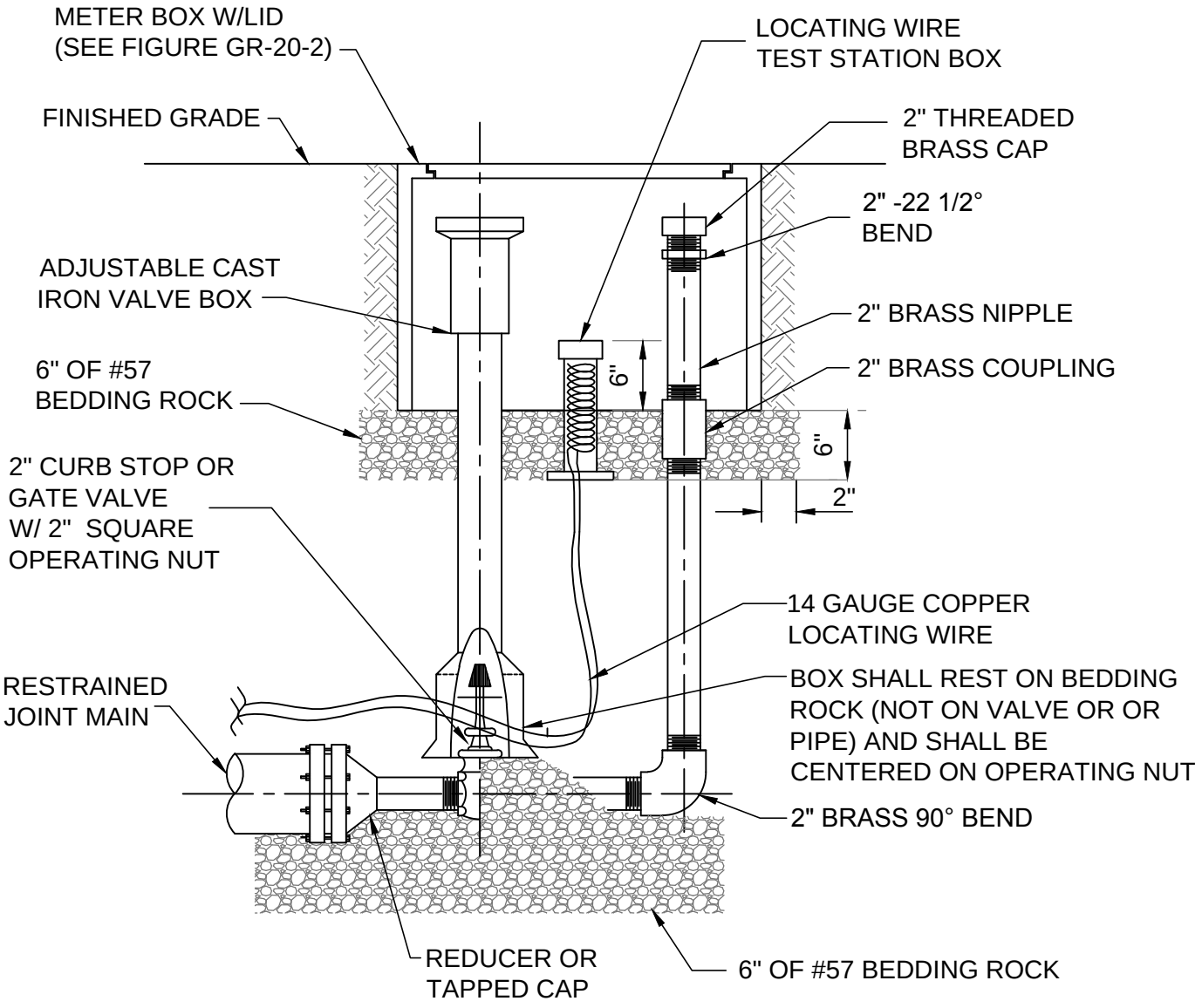

NOTES:

1. ALL 2" PIPE AND FITTINGS SHALL BE THREADED (NPT) BRASS JOINTS.
2. SCHEDULE 40 PVC PIPE AND FITTINGS MAY BE SUBSTITUTED FOR THE BRASS PIPE AND FITTINGS.

REV. : SEPTEMBER, 2014

BLOW OFF VALVE STANDARD	**FIGURE WA-01-1**
POLK COUNTY UTILITIES, FLORIDA	**DECEMBER, 2010**

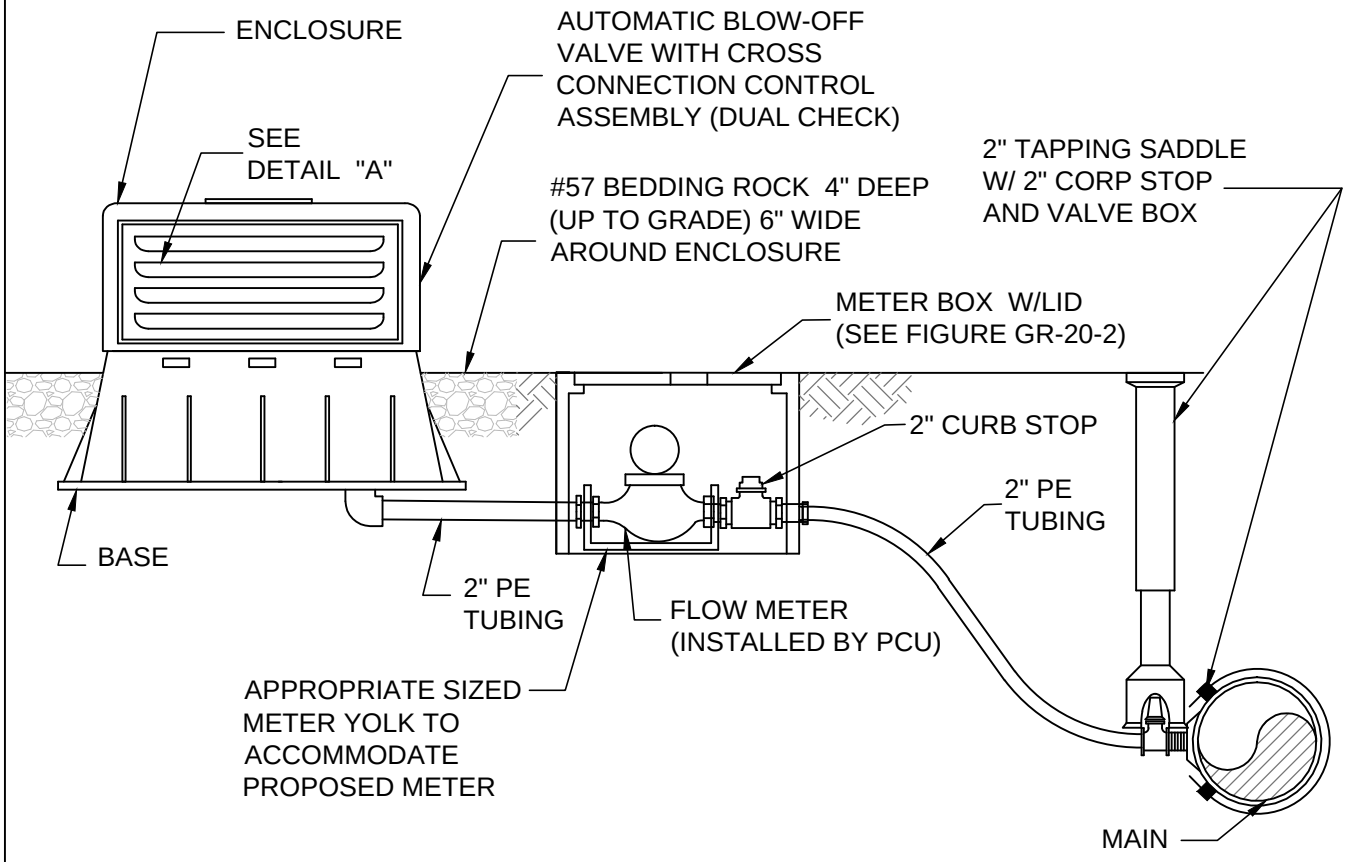

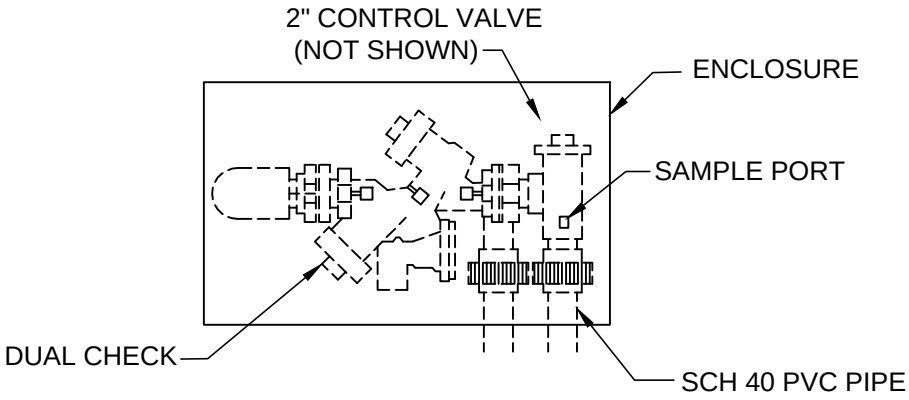

DETAIL "A" (INSIDE OF ENCLOSURE)

NOTES:

1. COLOR OF ENCLOSURE AND BASE SHALL BE :
   POTABLE WATER - BLUE

2. METER BOX SHALL BE IN ACCORDANCE WITH FIGURE GR-20-2.

3. NO AUTOMATIC BLOW OFF VALVE WILL BE INSTALLED ON RECLAIMED WATER SYSTEMS.

BLOW OFF VALVE (ABOVE GROUND) AUTOMATIC	**FIGURE WA-01-2**
POLK COUNTY UTILITIES, FLORIDA	**OCTOBER, 2015**

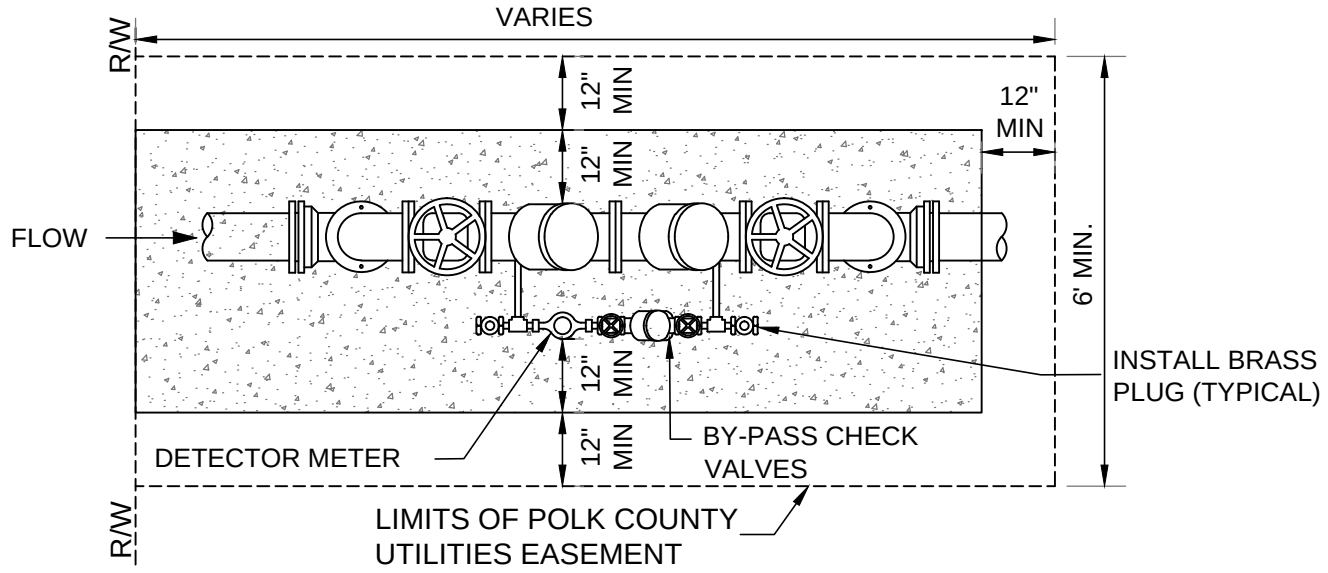

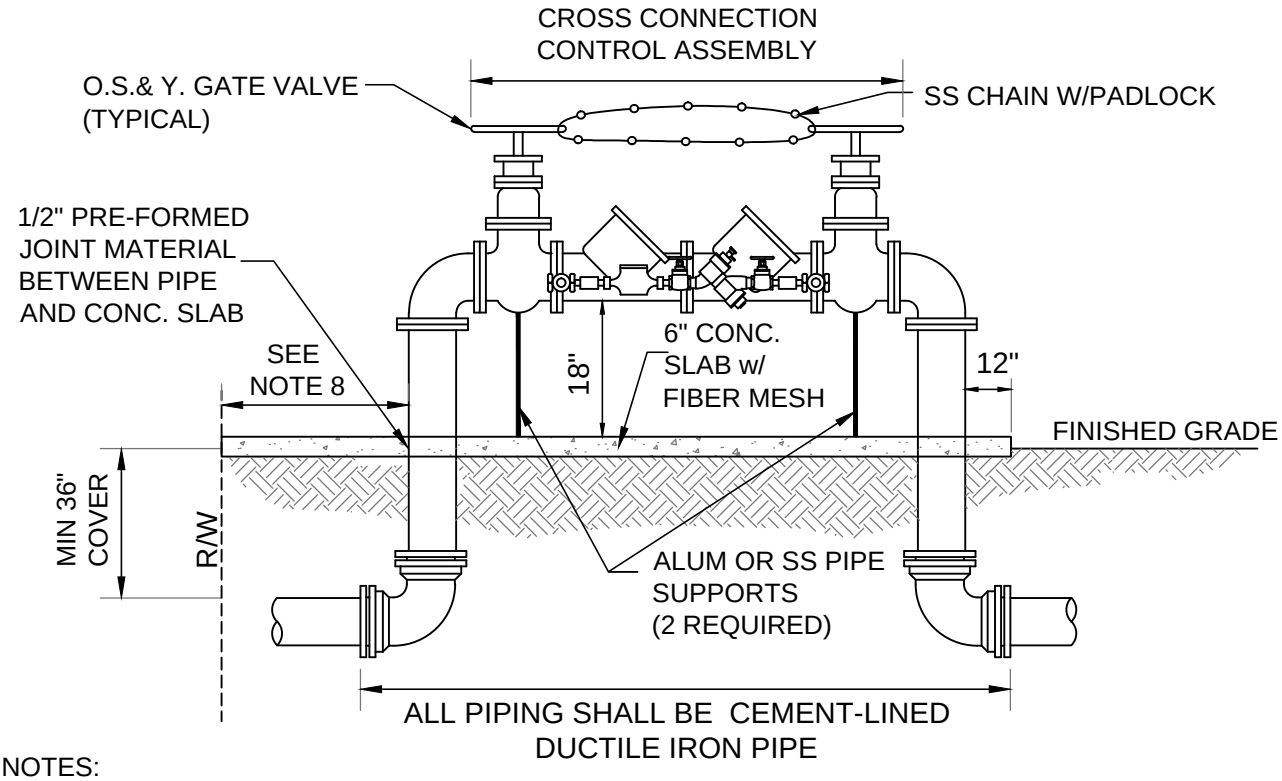

NOTES:

1. RESTRAINED JOINT FITTINGS SHALL BE REQUIRED FOR UNDERGROUND USE.
2. FLANGED FITTINGS SHALL BE REQUIRED.
3. PAINT THE ABOVE GROUND ASSEMBLY, INCLUDING ENTIRE LENGTH OF TIE RODS, AFTER MANUFACTURER'S RECOMMENDED SURFACE PREP IS COMPLETED. DO NOT PAINT OVER NAME/SERIAL PLATE OR BRASS FITTINGS. PAINT COLOR SHALL BE "INTERNATIONAL ORANGE"
4. PROVIDE PROTECTIVE CONCRETE FILLED 6" PIPE BOLLARDS AS REQUIRED BY PCU.
5. AN APPROVED DOUBLE CHECK DETECTOR ASSEMBLY SHALL BE SELECTED IN ACCORDANCE WITH PCU'S "APPROVED CROSS CONNECTION CONTROL ASSEMBLY LIST".
6. SPECIAL FIRE PROTECTION SYSTEMS USING INTERNAL PUMPS, TANKS, ETC. SHALL BE REQUIRED TO USE AN APPROVED REDUCED PRESSURE DETECTOR ASSEMBLY.
7. ALL PIPE, FITTINGS AND APPURTENANCES SHALL BE FURNISHED AND INSTALLED BY THE CONTRACTOR.
8. ASSEMBLY SHALL BE A MINIMUM 10' FROM EDGE OF PAVEMENT OR BUILDING, AND 4' FROM SIDEWALK OR HEDGE.
9. FULL FACED NEOPRENE GASKETS SHALL BE USED ON ALL FLANGED FITTINGS.

FIRE LINE DOUBLE CHECK DETECTOR ASSEMBLY (4 INCHES TO 12 INCHES)	**FIGURE WA-02**
POLK COUNTY UTILITIES, FLORIDA	**DECEMBER, 2010**

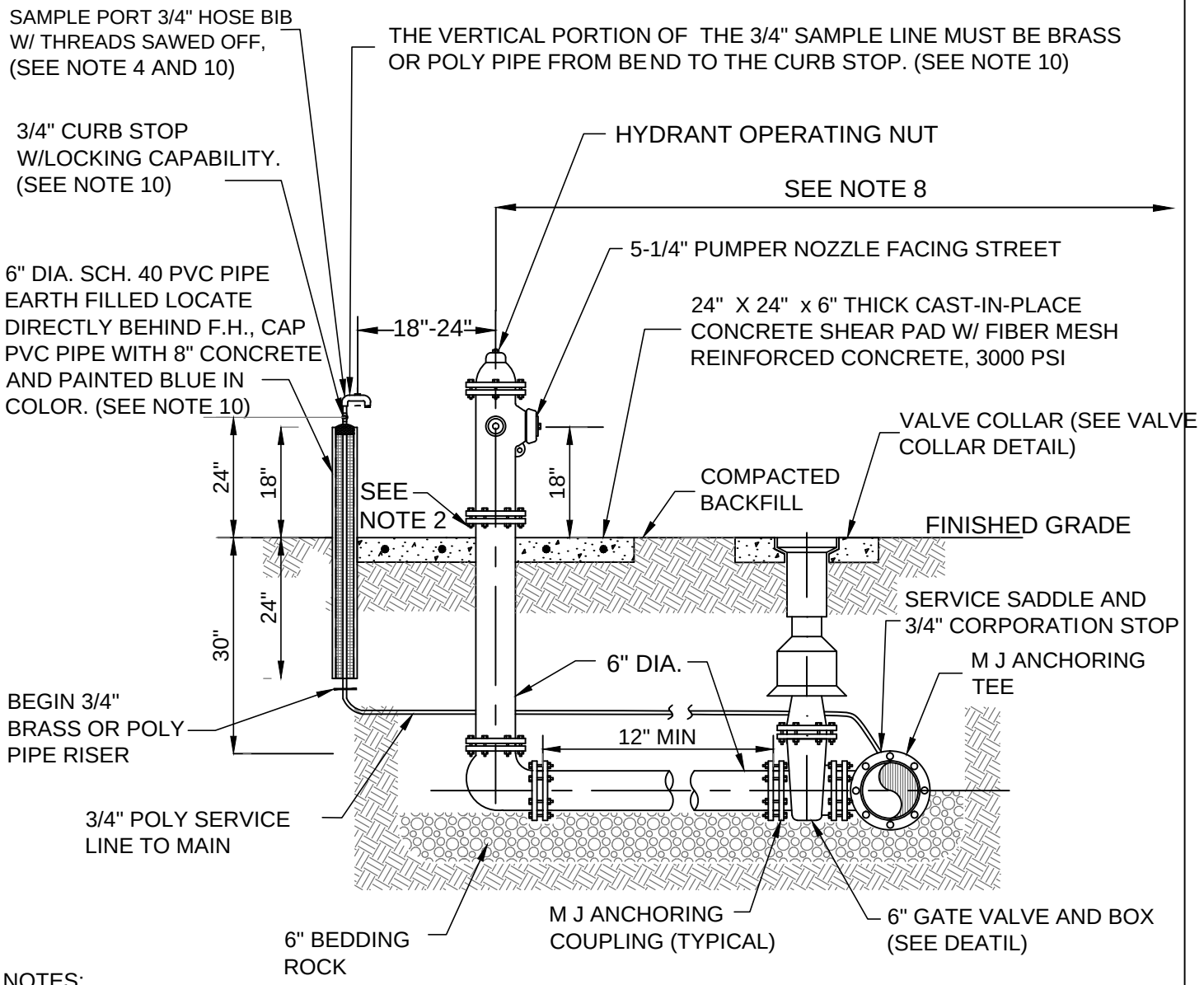

NOTES:

1. FIRE HYDRANT SHALL BE SUPPLIED WITHOUT A WEEP HOLE (DRY BARREL TYPE) UNLESS OTHERWISE APPROVED BY PCU.
2. CLEARANCE BETWEEN BOTTOM OF BOLTS AND TOP OF SHEAR PAD SHALL BE 6".
3. RESTRAINED JOINTS OR ALL-THREAD ROD REQUIRED TO SECURE PIPE, RISER AND VALVE IN THE FIRE HYDRANT ASSEMBLY TO THE MAIN.
4. TOP OF SAMPLE PORT TO BE LOWER THAN FLANGE ON FIRE HYDRANT BONNET.
5. HYDRANT SHALL BE PAINTED 1 COAT THEMEC 69-HIBUILD EPOXOLINE II (4-6DFT) AND ONE COAT 73-COLOR ENDURA SHIELD (3-5DFT); COLOR INTERNATIONAL ORANGE
6. VALVE COLLAR AND HYDRANT SHEAR PAD MAY BE INCORPORATED INTO ONE 6" THICK PAD.
7. THRUST BLOCKS MAY ONLY BE USED WHEN CONNECTION IS TO AN EXISTING WATER MAIN AND IT IS NOT KNOWN IF THERE ARE RESTRAINED JOINTS BOTH WAYS FROM THE CONNECTION.
8. HYDRANT SHALL BE MIN OF 2' FROM EDGE OF SIDEWALK, 5' MIN FROM BACK OF MIAMI CURB AND 10' MIN FROM EDGE OF DRIVEWAY OR TURNOUT.
9. A BLUE REFLECTIVE PAVEMENT MARKER (RPM) SHALL BE INSTALLED 6 INCHES TO THE SIDE OF THE LANE STRIPE WHICH IS CLOSEST TO THE HYDRANT AND IN LINE WITH THE LARGEST PORT.
10. A PRE-MANUFACTURED ONE PIECE SAMPLE STATION MAY BE SUBSTITUTED FOR THE FIELD CONSTRUCTED SAMPLING STATION IN ACCORDANCE WITH THE APPROVED MATERIAL CHECKLIST.

REV. : SEPTEMBER, 2014

FIRE HYDRANT ASSEMBLY	**FIGURE WA-03**
POLK COUNTY UTILITIES, FLORIDA	**DECEMBER, 2010**

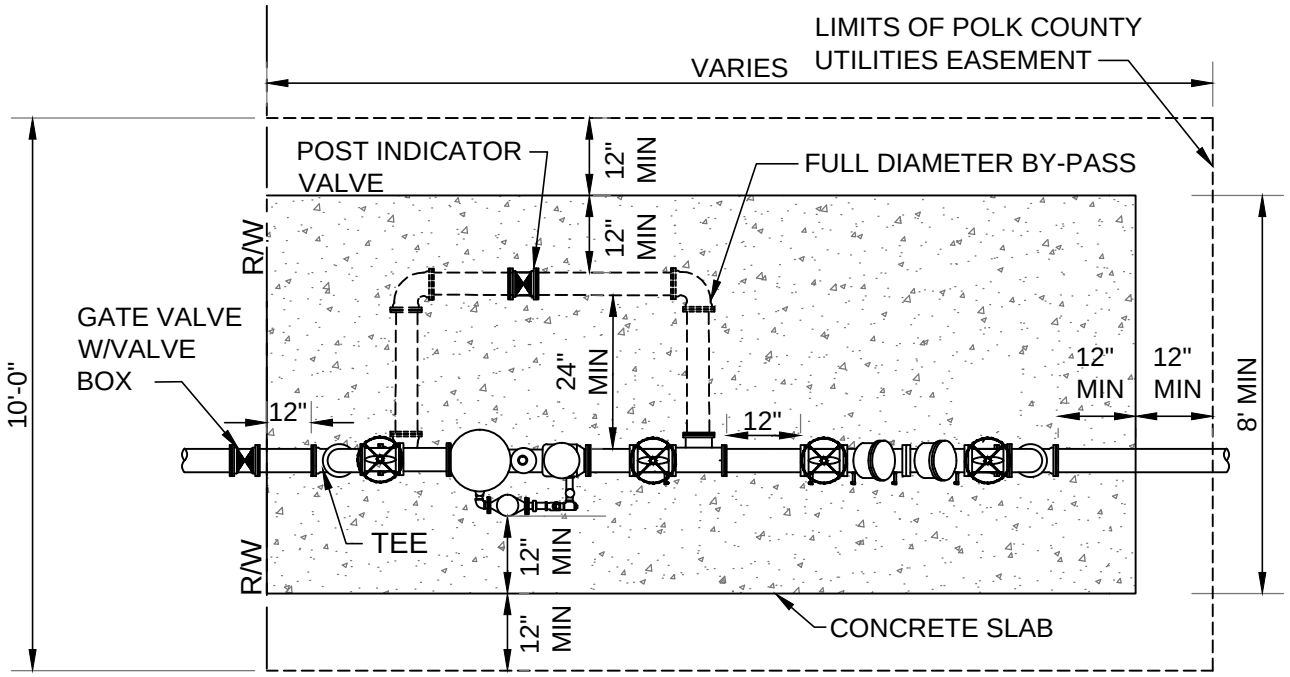

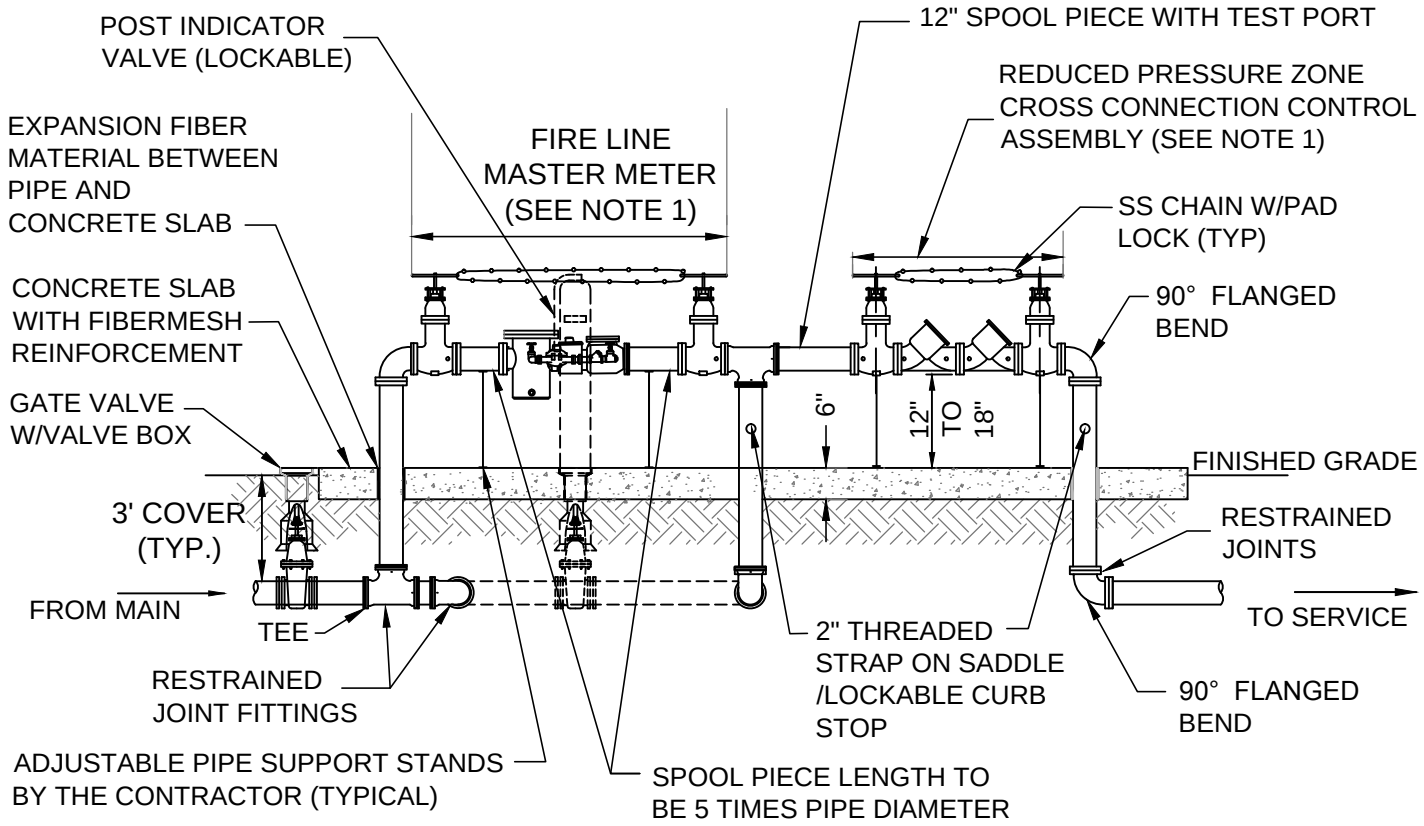

NOTES:

1. THE CONTRACTOR SHALL PROVIDE AND INSTALL THE FIRE SERVICE MASTER METER INCLUDING THE METER, CROSS CONNECTION CONTROL ASSEMBLY, ALL PIPE FITTINGS, STAINLESS STEEL (CHAINS) AND APPURTENANCES.
2. ALL THE ABOVE GROUND PIPE SHALL BE FLANGED DUCTILE IRON.
3. PAINT THE ABOVE GROUND ASSEMBLY, INCLUDING ENTIRE LENGTH OF TIE RODS, AFTER MANUFACTURER'S RECOMMENDED SURFACE PREP IS COMPLETED. DO NOT PAINT OVER NAME/SERIAL PLATE OR BRASS FITTINGS. PAINT COLOR SHALL BE "INTERNATIONAL ORANGE" .
4. BOLLARDS SHALL BE REQUIRED BY PCU ON CORNERS OF THE CONCRETE PAD TO PROVIDE PROTECTION FROM VEHICULAR TRAFFIC.
5. ABOVE GROUND VALVES SHALL BE O.S. & Y TYPE.

FIRE SERVICE MASTER METER ASSEMBLY (SINGLE CROSS CONNECTION CONTROL ASSEMBLY)	**FIGURE WA-04-1**
POLK COUNTY UTILITIES, FLORIDA	**DECEMBER, 2010**

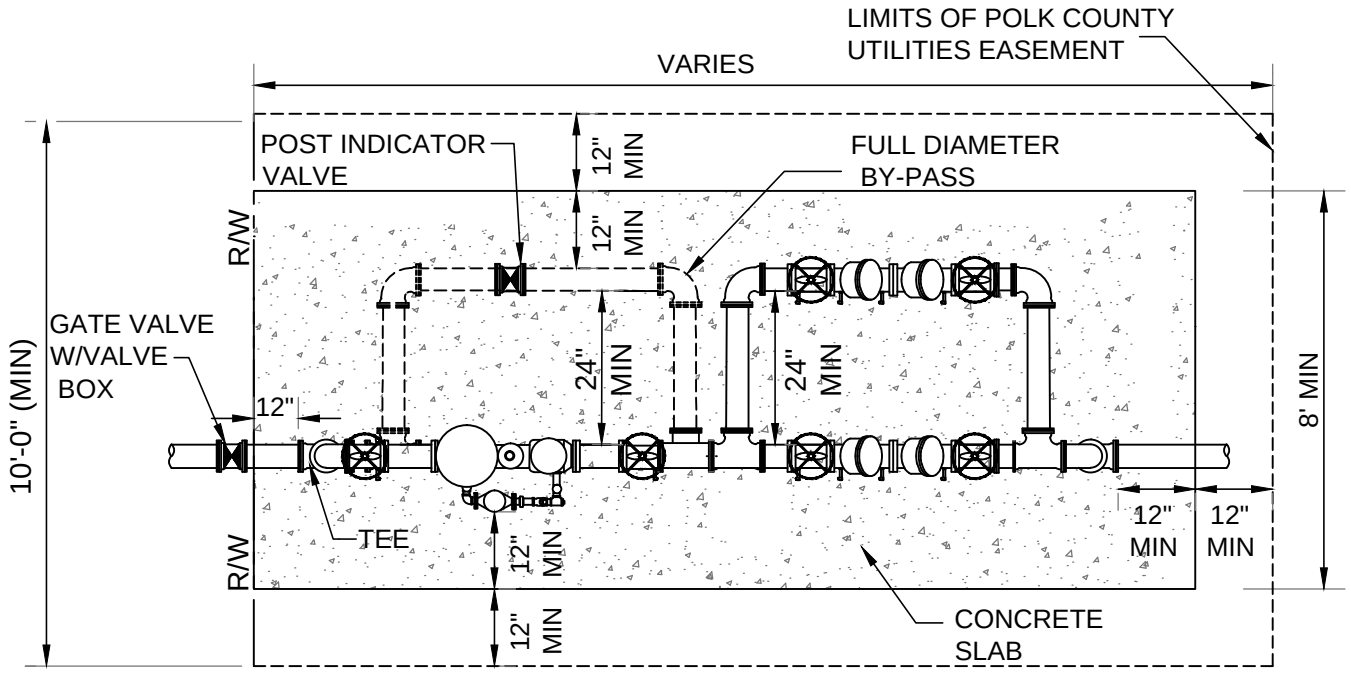

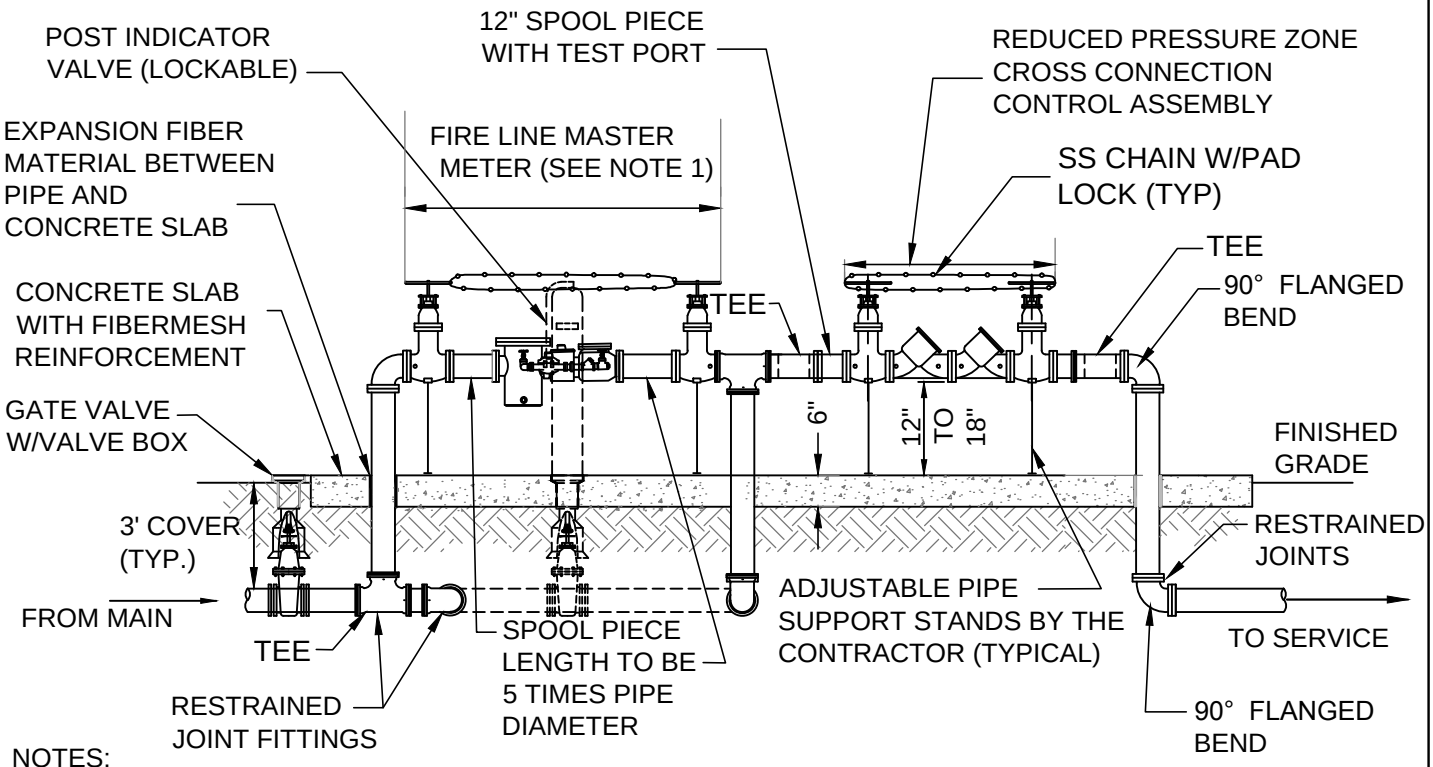

NOTES:

1. DOUBLE CROSS CONNECTION CONTROL ASSEMBLIES SHALL BE UTILIZED WHERE THE WATER SUPPLY CAN NOT BE INTERRUPTED.
2. THE CONTRACTOR SHALL PROVIDE AND INSTALL THE FIRE SERVICE MASTER METER INCLUDING THE METER, CROSS CONNECTION CONTROL ASSEMBLY, ALL PIPE FITTINGS, AND APPURTENANCE.
3. ALL THE ABOVE GROUND PIPE SHALL BE FLANGED DUCTILE IRON.
4. PAINT THE ABOVE GROUND ASSEMBLY, INCLUDING ENTIRE LENGTH OF TIE RODS, AFTER MANUFACTURER'S RECOMMENDED SURFACE PREP IS COMPLETED. DO NOT PAINT OVER NAME/SERIAL PLATE OR BRASS FITTINGS. PAINT COLOR SHALL BE "INTERNATIONAL ORANGE"
5. BOLLARDS SHALL BE REQUIRED BY PCU ON CORNERS OF THE CONCRETE PAD TO PROVIDE PROTECTION FROM VEHICULAR TRAFFIC .
6. ABOVE GROUND VALVES SHALL BE O.S. & Y TYPE.

FIRE SERVICE MASTER METER ASSEMBLY (DOUBLE CROSS CONNECTION CONTROL ASSEMBLIES)	**FIGURE WA-04-2**
POLK COUNTY UTILITIES, FLORIDA	**DECEMBER, 2010**

METER & REDUCED PRESSURE ZONE CROSS CONNECTION CONTROL ASSEMBLY (UP TO 2 INCHES)

POLK COUNTY UTILITIES, FLORIDA

FIGURE WA-05

DECEMBER, 2010

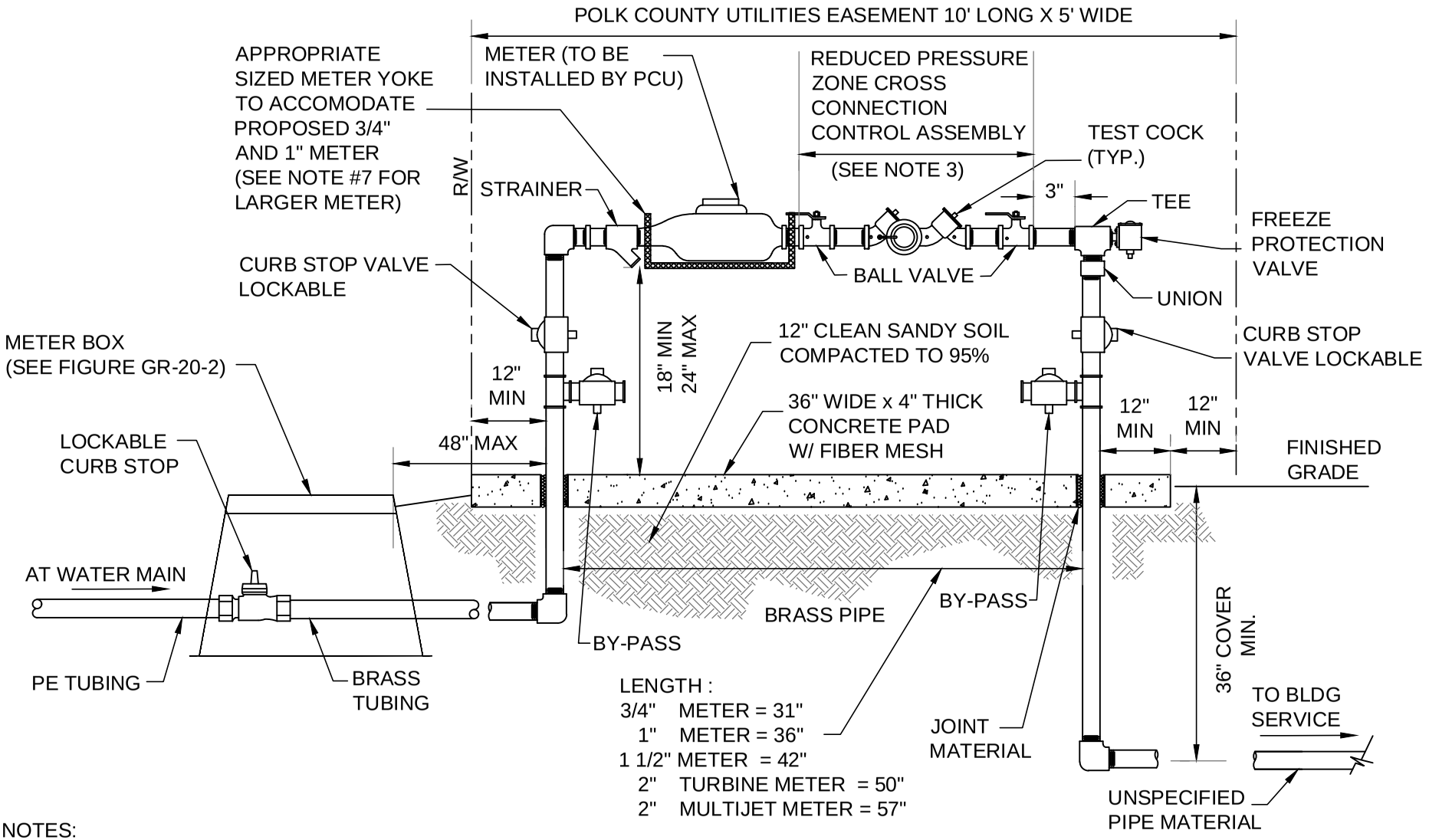

NOTES:

1. PIPE & FITTINGS ABOVE GROUND SHALL BE SCH 40, BRASS, PIPING TO THE BUILDING SHALL BE IN ACCORDANCE WITH THE FLORIDA PLUMBING CODE.
2. ASSEMBLY SHALL BE A MIN OF 6' FROM EDGE OF PAVEMENT 10' FROM TREES AND 4' FROM SIDEWALK, BUILDING, WALL OR HEDGE.
3. APPROVED ASSEMBLIES SHALL BE IN ACCORDANCE WITH THE APPROVED CROSS CONNECTION CONTROL ASSEMBLIES LIST.
4. ALL ABOVE GRADE PIPING SHALL BE PAINTED BLUE IN COLOR IN ACCORDANCE WITH THE POLK COUNTY UTILITIES CODE
5. BRONZE METER, STRAINER, AND BRONZE VALVES SHALL NOT BE PAINTED.
6. METER SHALL BE FURNISHED & INSTALLED BY PCU, THE CONTRACTOR SHALL FURNISH AND INSTALL ENTIRE ASSEMBLY, INCLUDING METER YOLK OR SPACER, GRADING, COMPACTION, CONCRETE PAD, AND PAINTING OF ASSEMBLY.
7. SPACER PIPE SHALL BE APPROPRIATELY SIZED FOR 1 1/2" OR 2" METER SIZE AND TYPE TO BE INSTALLED LATER BY PCU.

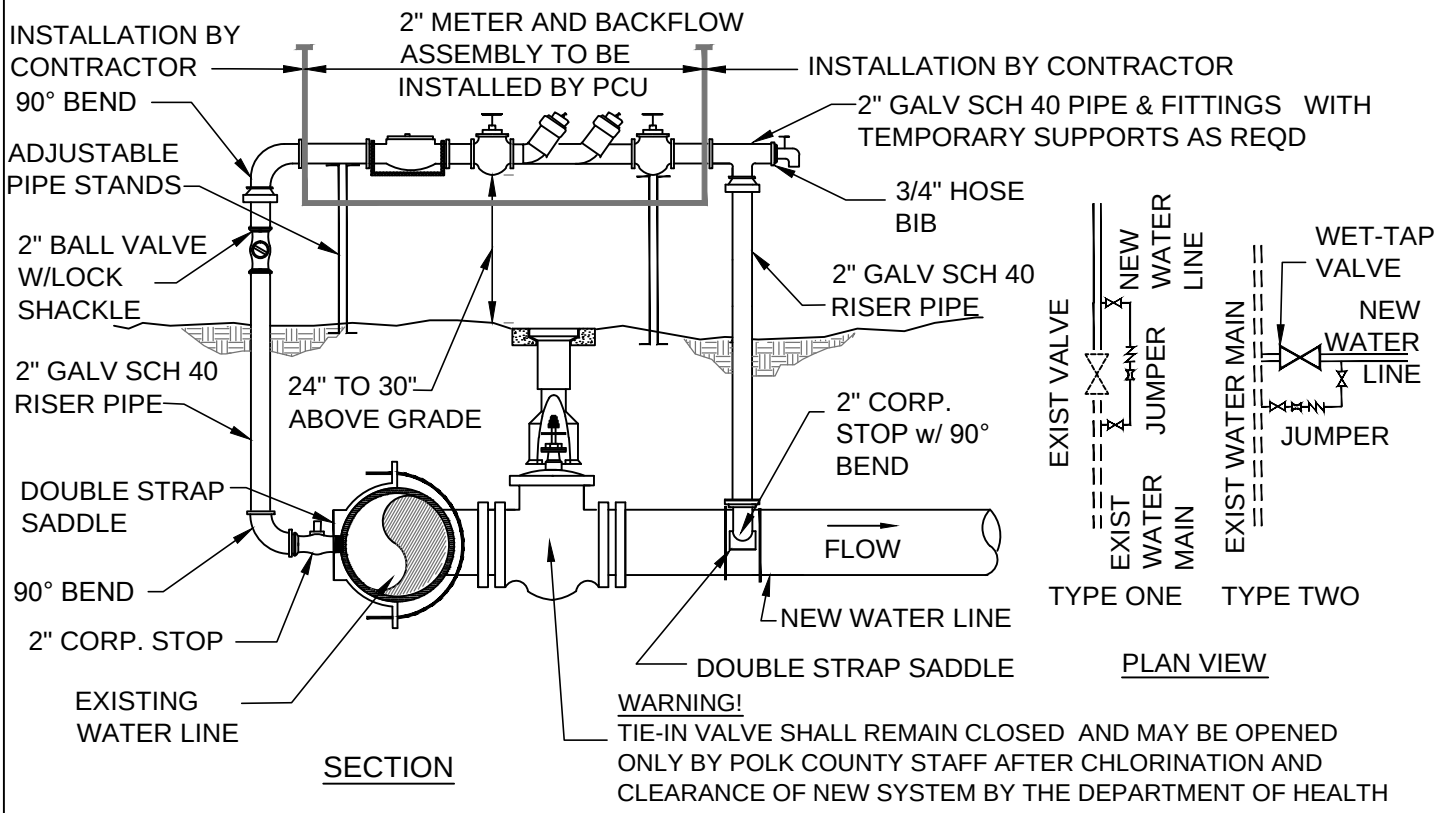

WARNING!
TIE-IN VALVE SHALL REMAIN CLOSED AND MAY BE OPENED ONLY BY POLK COUNTY STAFF AFTER CHLORINATION AND CLEARANCE OF NEW SYSTEM BY THE DEPARTMENT OF HEALTH

1. THE ENTIRE JUMPER ASSEMBLY EXCEPT AS NOTED ABOVE SHALL BE INSTALLED BY THE CONTRACTOR.
2. THIS JUMPER CONNECTION IS REQUIRED AT THE PRIMARY POINT OF CONNECTION TO ACTIVE POTABLE WATER MAINS. THE METER, BACKFLOW PREVENTER AND ALL PIPE AND FITTINGS USED FOR THE JUMPER CONNECTION SHALL BE DISINFECTED PRIOR TO INSTALLATION IN ACCORDANCE WITH AWWA C651, LATEST EDITION.
3. THE JUMPER CONNECTION SHALL BE USED TO FILL AND FLUSH THE NEW WATER MAIN AND TO PROVIDE WATER FOR TESTING AND BACTERIOLOGICAL SAMPLING OF THE NEW MAIN AS REQUIRED.
4. FLUSHING OF NEW WATER MAINS MAY BE DONE VIA THE TIE-IN VALVE ONLY UNDER THE FOLLOWING CONTROLLED CONDITIONS.
   A. THE TIE-IN VALVES SHALL BE OPERATED AND PRESSURE TESTED IN THE PRESENCE OF PCU STAFF IN ORDER TO VERIFY WATER TIGHTNESS PRIOR TO TIE-IN. VALVES WHICH ARE NOT WATERTIGHT SHALL BE REPLACED OR A NEW VALVE INSTALLED IMMEDIATELY ADJACENT TO THE LEAKING VALVE.
   B. THE TIE-IN VALVE SHALL BE OPENED ONLY FOR FLUSHING AND CLEANING OF NEW MAINS. THE FLUSHING SHALL BE DONE IN THE PRESENCE OF PCU STAFF.
5. THE JUMPER CONNECTION SHALL REMAIN OPEN TO MAINTAIN MINIMUM PRESSURE (20psi) IN NEW MAINS AFTER DISINFECTION BUT PRIOR TO HEALTH DEPT CLEARANCE LETTER BEING ISSUED.
6. THE JUMPER CONNECTION MAY NOT BE REMOVED UNTIL FLUSHING, TESTING, AND DISINFECTION OF NEW WATER MAINS IS COMPLETED AND THE SYSTEM CLEARANCE LETTER IS OBTAINED FROM THE POLK COUNTY HEALTH DEPARTMENT.
7. ADEQUATE SUPPORTS, BRACING AND/OR RESTRAINTS SHALL BE PROVIDED AS NEEDED TO RESIST PRESSURE FORCES AND SUPPORT THE ASSEMBLY.
8. THE JUMPER CONNECTION SHALL BE PROTECTED FROM DAMAGE BY INSTALLATION OF A PROTECTIVE WARNING FENCE OR SIMILAR BARRICADE, WHICH SHALL BE ERECTED AND MAINTAINED BY THE CONTRACTOR.
9. UPON RECEIPT OF CLEARANCE FOR USE FROM THE HEALTH DEPARTMENT AND A REQUEST TO TERMINATE CONSTRUCTION SERVICE, PCU WILL REMOVE THE METER AND THE CONTRACTOR SHALL REMOVE THE TEMPORARY JUMPER CONNECTION.
10. CORPORATION STOPS SHALL BE CLOSED AND PLUGGED WITH 2" BRASS PLUGS BY THE CONTRACTOR.

	REV MARCH, 2012
JUMPER CONNECTION (TYPICAL)	**FIGURE WA-06**
POLK COUNTY UTILITIES, FLORIDA	**DECEMBER, 2010**

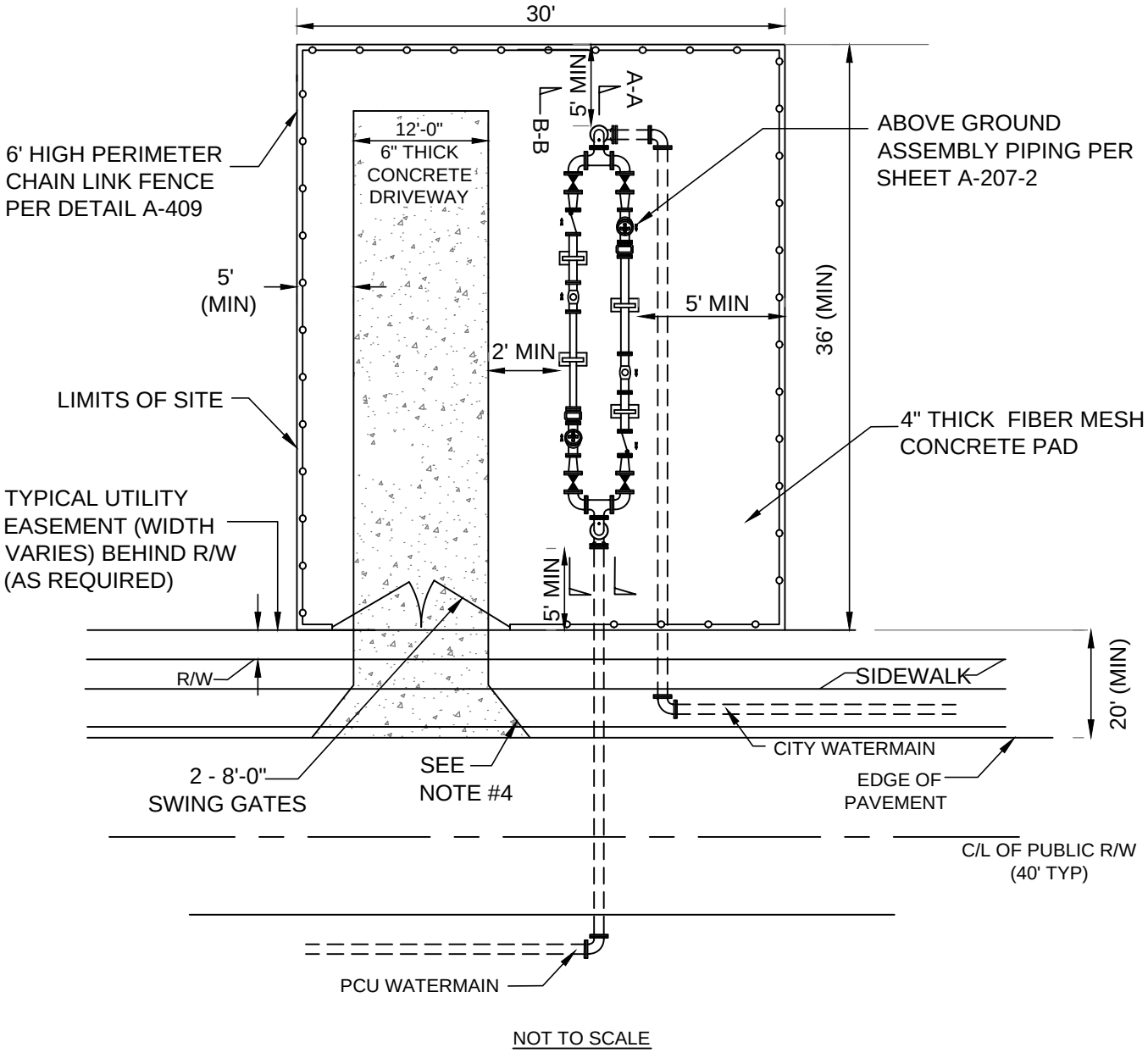

NOT TO SCALE

NOTES:

1. FENCING MAY BE REPLACED WITH OPTIONAL CONCRETE MASONRY WALL (SEE FIGURE A410-1 TO 2)
2. SLOPE OF PAD AND DRIVEWAY SHALL BE 1/8" PER 1' DOWN SLOPE (1.0%). FROM CENTER OF ASSEMBLY TO PERIMETER OF PAD .
3. MINIMUM DISTANCE BETWEEN FENCE AND ALL INSTALLED EQUIPMENT SHALL BE 5'.
4. USE OF 20' RADIUS OR 5' FLARE OF DRIVEWAY AT ROADWAY SHALL BE DETERMINED BY THE SURROUNDING DRIVEWAY GEOMETRY.
5. ENGINEER SHALL PROVIDE A SCALED (1" = 20' MIN) SITE DETAIL.

WATER SYSTEM INTERCONNECT SITE PLAN	**FIGURE WA-07-1**
POLK COUNTY UTILITIES, FLORIDA	**DECEMBER, 2010**

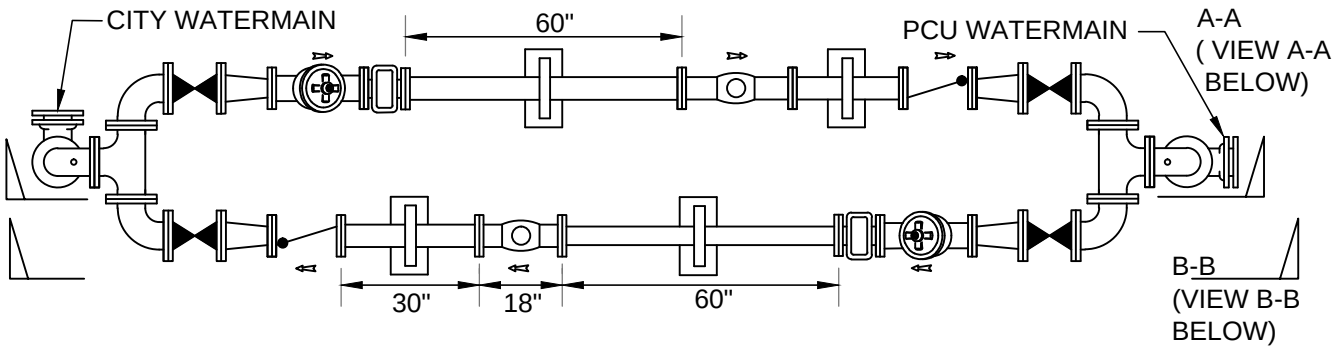

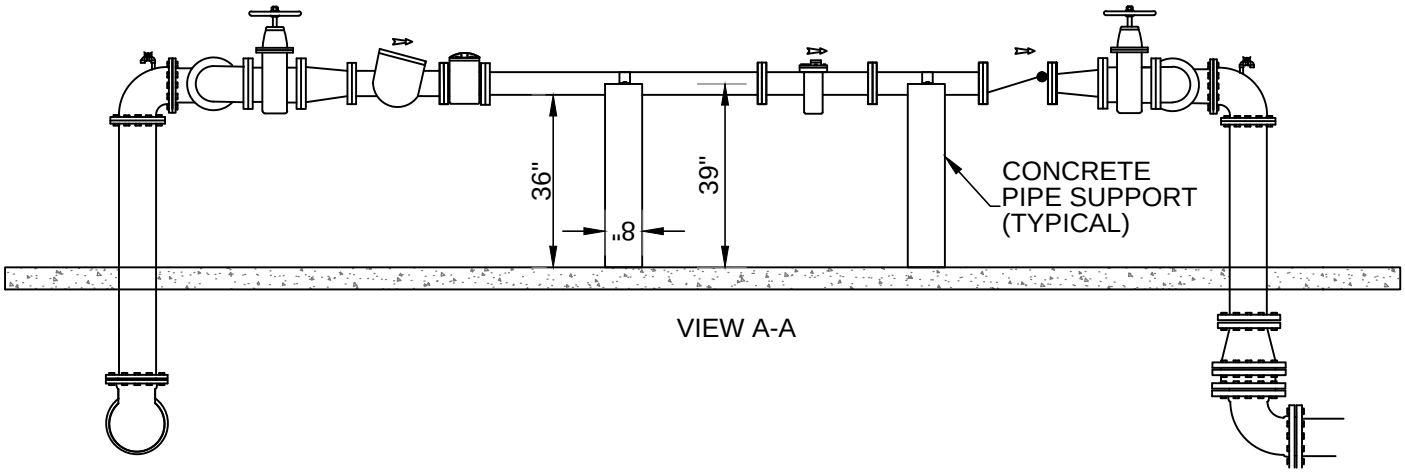

VIEW A-A

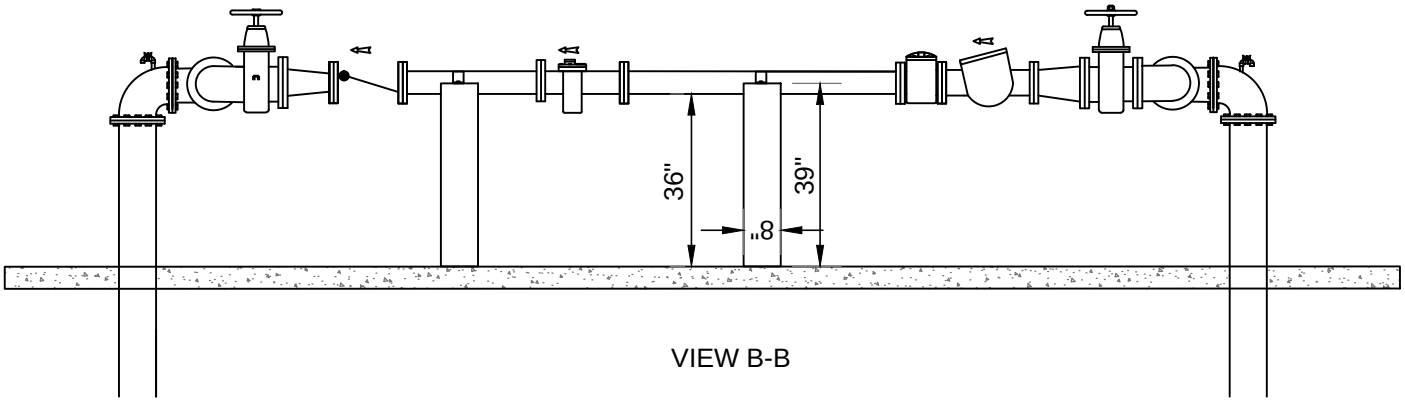

VIEW B-B

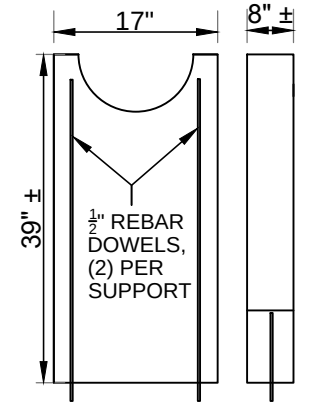

CONCRETE PIPE SUPPORT

SCALE: N.T.S.

WATER SYSTEM INTERCONNECT PLAN AND SECTION VIEWS	**FIGURE WA-07-2**
POLK COUNTY UTILITIES, FLORIDA	**DECEMBER, 2010**

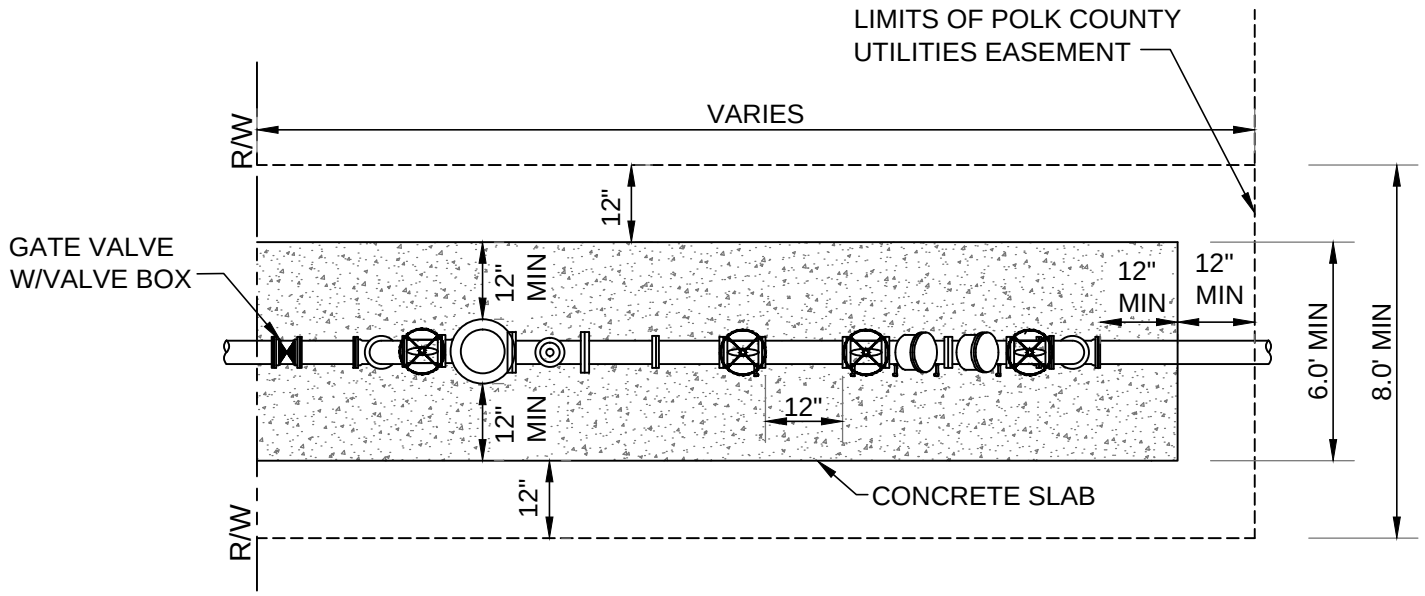

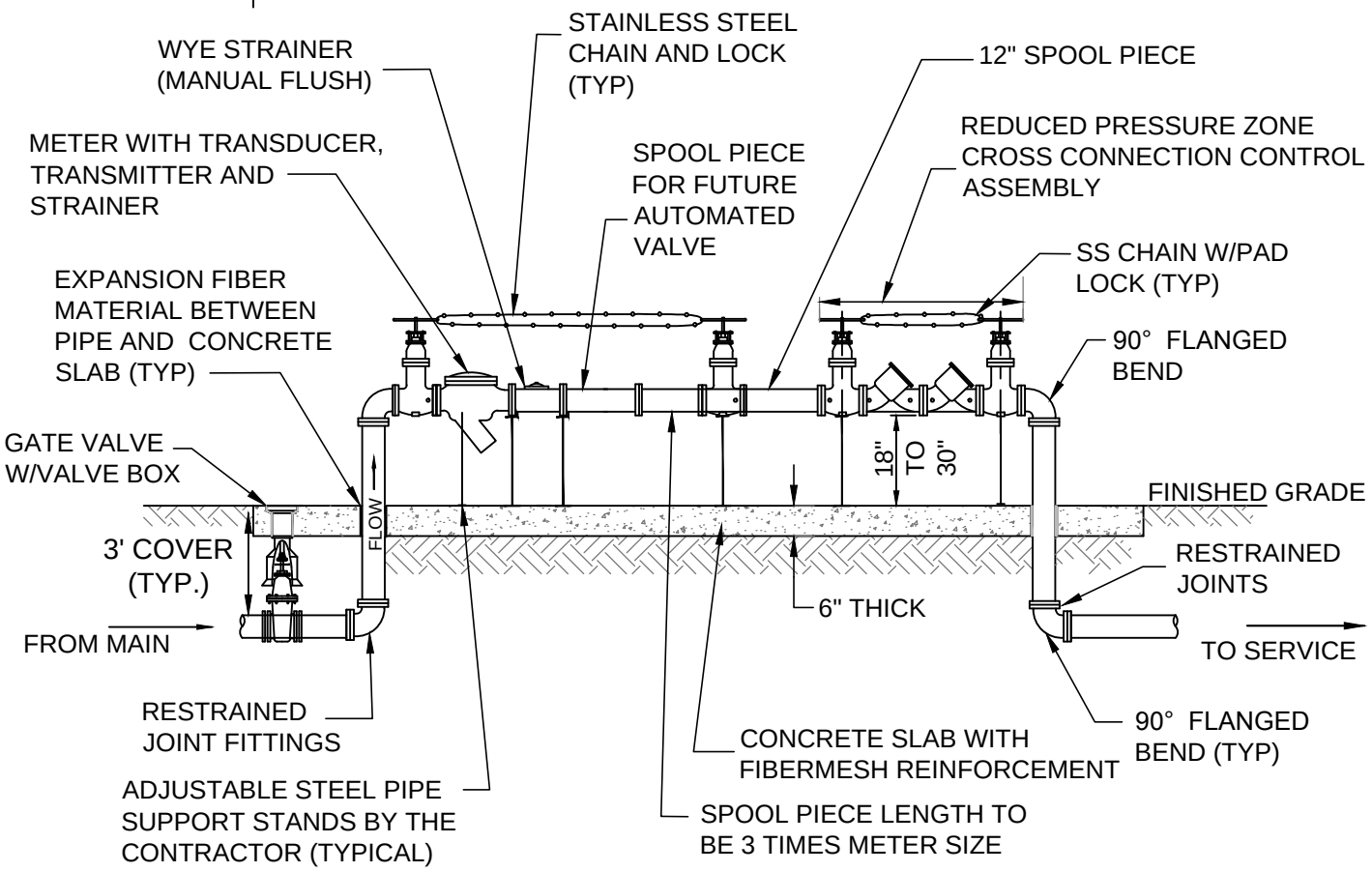

NOTES:

1. THE CONTRACTOR SHALL PROVIDE AND INSTALL POTABLE WATER IRRIGATION MASTER CONTROL ASSEMBLY, ALL PIPE FITTINGS, STAINLESS STEEL (CHAINS) AND APPURTENANCES.
2. ALL THE ABOVE GROUND PIPE SHALL BE FLANGED DUCTILE IRON.
3. PAINTING SHALL BE IN ACCORDANCE WITH FDOH REQUIREMENTS AND THE UTILITIES STANDARDS AND SPECIFICATIONS MANUAL.
4. BOLLARDS MAY BE REQUIRED BY PCU ON CORNERS OF THE CONCRETE PAD TO PROVIDE PROTECTION FROM VEHICULAR TRAFFIC.
5. ABOVE GROUND VALVES SHALL BE O.S. & Y TYPE.
6. METER SHALL BE CAPABLE OF ACCURATELY MEASURING THE ENTIRE RANGE OF EXPECTED FLOWS AND THE TYPE AND MANUFACTURE SHALL BE APPROVED BY PCU.

POTABLE WATER IRRIGATION MASTER CONTROL ASSEMBLY (FOUR INCHES AND LARGER)	**FIGURE WA-08**
POLK COUNTY UTILITIES, FLORIDA	**DECEMBER, 2010**

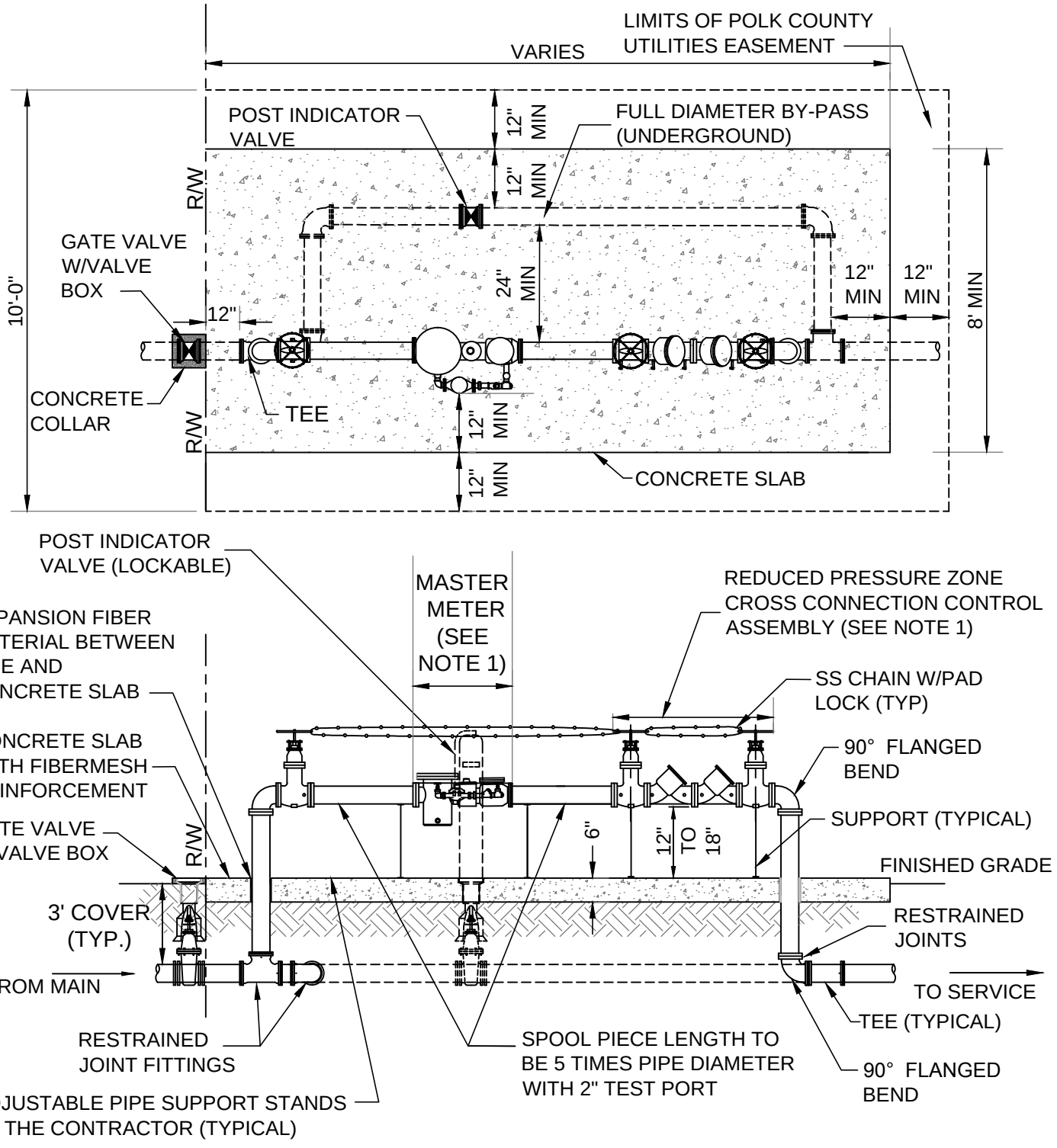

NOTES:

1. THE CONTRACTOR SHALL PROVIDE AND INSTALL THE MASTER METER INCLUDING THE METER, CROSS CONNECTION CONTROL ASSEMBLY, ALL PIPE FITTINGS, STAINLESS STEEL (CHAINS) AND APPURTENANCES.
2. ALL THE ABOVE GROUND PIPE SHALL BE FLANGED DUCTILE IRON.
3. PAINT THE ABOVE GROUND ASSEMBLY, INCLUDING ENTIRE LENGTH OF TIE RODS, AFTER MANUFACTURER'S RECOMMENDED SURFACE PREP IS COMPLETED. DO NOT PAINT OVER NAME/SERIAL PLATE OR BRASS FITTINGS. PAINT COLOR SHALL BE "INTERNATIONAL ORANGE" .
4. BOLLARDS SHALL BE REQUIRED BY PCU ON CORNERS OF THE CONCRETE PAD TO PROVIDE PROTECTION ADJACENT TO VEHICULAR USE AREAS.
5. ABOVE GROUND VALVES SHALL BE O.S. & Y TYPE.

REV DECEMBER, 2012

MASTER METER ASSEMBLY (3" AND LARGER)
(SINGLE CROSS CONNECTION CONTROL ASSEMBLY)

FIGURE WA-09-1

POLK COUNTY UTILITIES, FLORIDA

DECEMBER, 2010

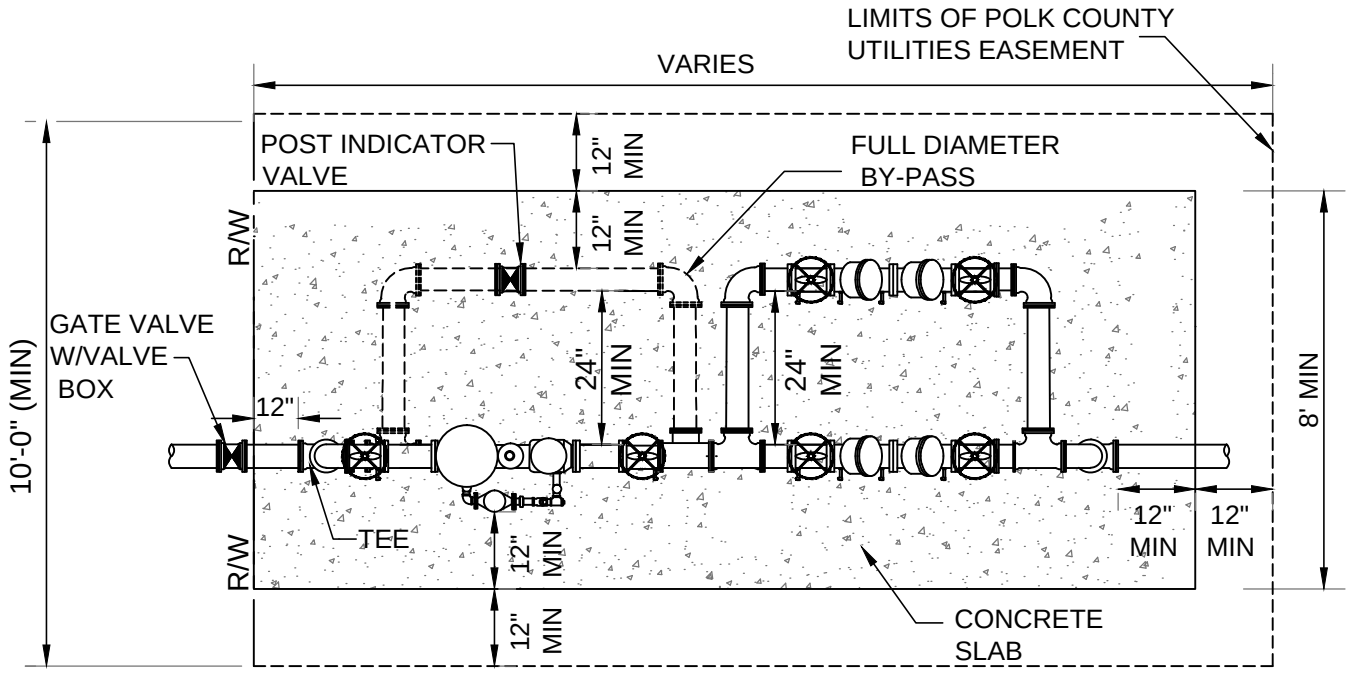

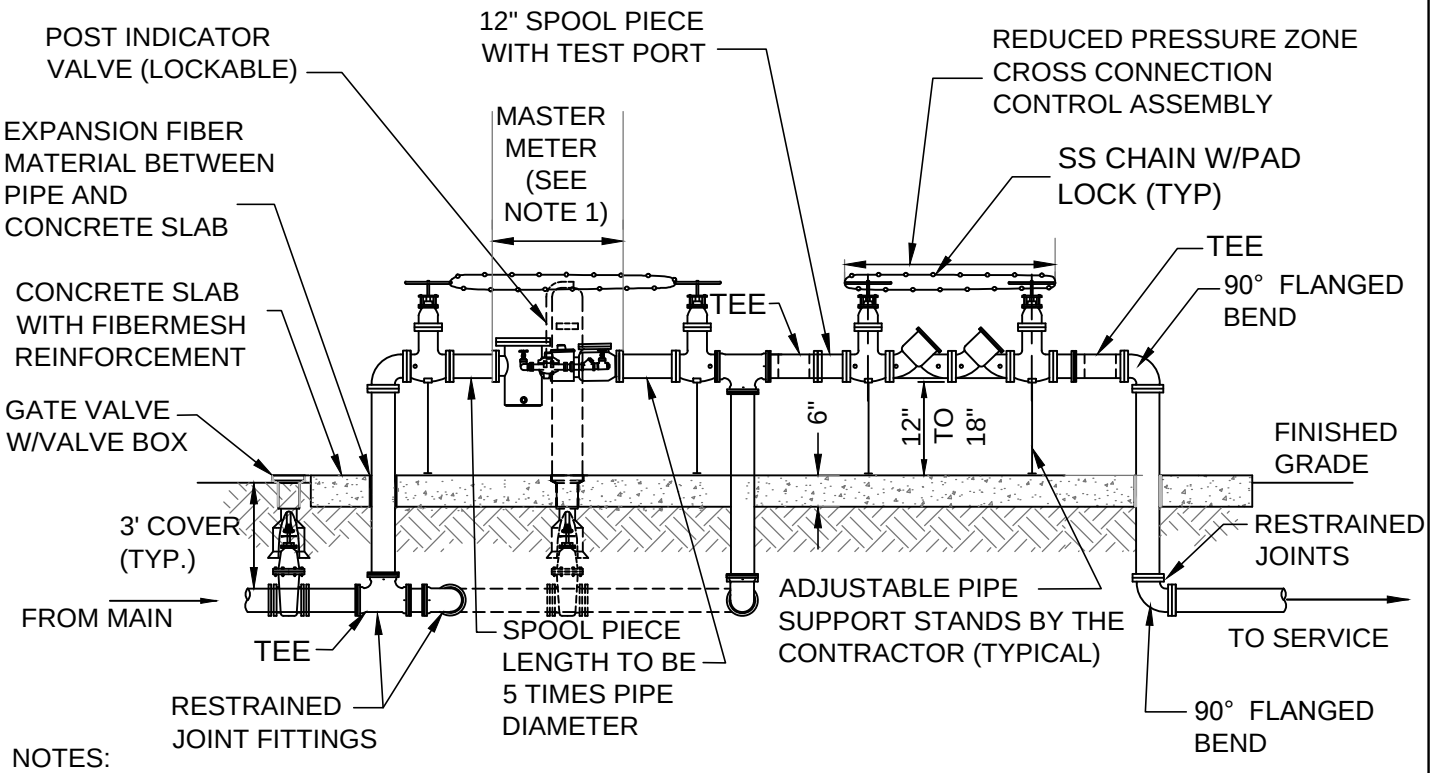

NOTES:

1. DOUBLE CROSS CONNECTION CONTROL ASSEMBLIES SHALL BE UTILIZED WHERE THE WATER SUPPLY CAN NOT BE INTERRUPTED.
2. THE CONTRACTOR SHALL PROVIDE AND INSTALL THE MASTER METER INCLUDING THE METER, CROSS CONNECTION CONTROL ASSEMBLY, ALL PIPE FITTINGS, AND APPURTENANCE.
3. ALL THE ABOVE GROUND PIPE SHALL BE FLANGED DUCTILE IRON.
4. PAINT THE ABOVE GROUND ASSEMBLY, INCLUDING ENTIRE LENGTH OF TIE RODS, AFTER MANUFACTURER'S RECOMMENDED SURFACE PREP IS COMPLETED. DO NOT PAINT OVER NAME/SERIAL PLATE OR BRASS FITTINGS. PAINT COLOR SHALL BE "INTERNATIONAL ORANGE"
5. BOLLARDS SHALL BE REQUIRED BY PCU ON CORNERS OF THE CONCRETE PAD TO PROVIDE PROTECTION FROM VEHICULAR TRAFFIC .
6. ABOVE GROUND VALVES SHALL BE O.S. & Y TYPE.

MASTER METER ASSEMBLY (3" AND LARGER) (DOUBLE CROSS CONNECTION CONTROL ASSEMBLIES)	**FIGURE WA-09-2**
POLK COUNTY UTILITIES, FLORIDA	**DECEMBER, 2010**

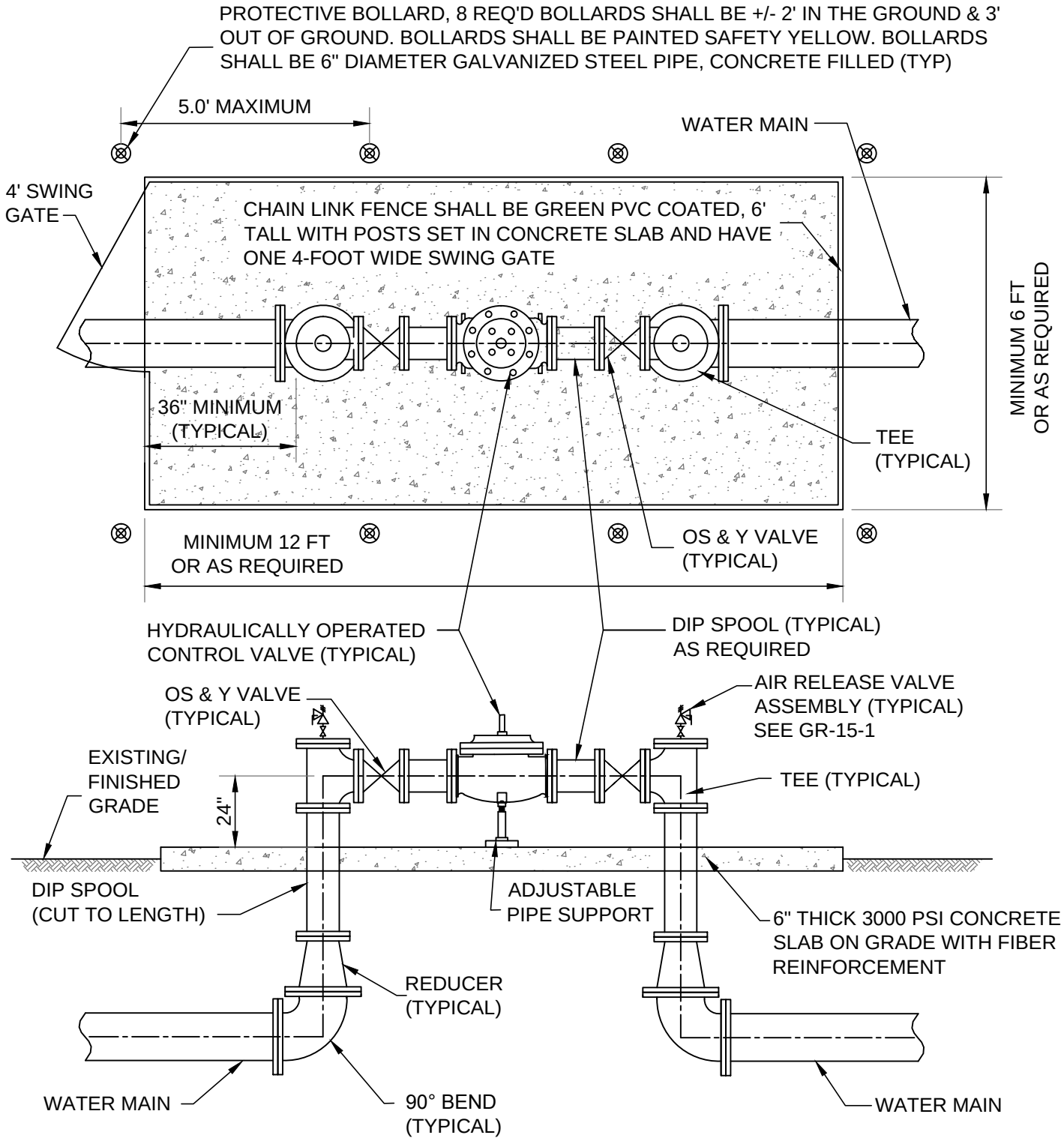

NOTES:

1 THE CONTRACTOR SHALL PROVIDE AND INSTALL AIR RELEASE VALVE PER APPROVAL BY POLK COUNTY.
2 ALL THE ABOVE GROUND PIPE SHALL BE FLANGED DUCTILE IRON.
3 ABOVE GROUND ASSEMBLY SHALL BE PAINTED IN ACCORDANCE WITH PCU REQUIREMENTS.
4 BOLLARDS SHALL BE REQUIRED BY PCU ON CORNERS AND ALONG THE LENGTH OF THE CONCRETE PAD TO PROVIDE PROTECTION ADJACENT TO VEHICULAR USE AREAS.
5 ABOVE GROUND VALVES SHALL BE O.S. & Y TYPE.

HYDRAULICALLY OPERATED CONTROL VALVE	**FIGURE WA-10**
POLK COUNTY UTILITIES, FLORIDA	**DECEMBER, 2012**

CHAPTER 5 WASTEWATER

Section 510 Gravity Wastewater System Standards and Specifications December 2010

PART 1 - GENERAL

A. PCU will not approve PLANS for combined wastewater gravity systems. Gravity mains shall be designed to exclude infiltration/inflow.

B. Wastewater gravity system shall be designed for the estimated ultimate tributary population, as delineated in the approved PCU's MASTER PLAN (latest edition). When the DEVELOPER's MASTER PLAN is required, wastewater gravity mains shall be designed for the estimated ultimate build out of that DEVELOPMENT, as approved by PCU

PART 2 - LOCATION

A. Mains shall be located within dedicated public rights-of-way or Polk County Utilities Easements.

1. Public Rights-of-Way

   When installed in rights-of-way, mains shall maintain a consistent alignment with respect to the centerline of the road. In all cases, mains shall be installed along one side of the road with crossings kept to a minimum.

2. Polk County Utilities Easements

   If a main is to be constructed within an easement, the centerline of the pipe shall be located along the centerline of the easement.

   a. When not adjacent to County or State rights of way, a minimum width of 20 feet shall be provided for mains with inverts located up to 5 feet below finish grade. For mains with inverts located deeper than 5 feet below finish grade, the minimum width shall be twice the invert depth of the main plus 10 feet. All widths shall be rounded up to the nearest even foot. Width of the easement shall be based on the deepest invert depth of each segment of the subject main.

   b. Where multiple parallel mains are to be placed within a single easement, the FDEP required horizontal separation distance between the mains shall be added to the above minimum single main easement width and rounded up to the nearest even foot.

   c. Have a maximum length of 150 linear feet if the easement terminates in a dead end or an obstruction. Longer easements may be authorized if adequate turnaround and work zone is provided as based on an AASHTO single unit vehicle. All locations and lengths of easements shall take in consideration the safety and accessibility of PCU vehicles and personnel.

   d. Be free of any permanent structures, such as footers, foundations, walls, screen walls, buildings, air conditioner pads, transformer pads, sign supports, roof overhangs, stormwater structure, swimming pools, storage sheds, patios, etc.

   e. Be accessible at all times and not subject to standing water nor under the side slope or bottom of a lake, pond or stormwater retention area, except that

perpendicular crossings under swales, small ditches and canals may be authorized in writing by PCU.

f. As designated by PCU for existing use, a Polk County Utilities Easement of not less than 15 feet in width shall be provided parallel to and directly adjacent to all County, State, and Federal rights-of-way. Notwithstanding PCU's easement requirements stated above and herein, easements in typical subdivision construction including those adjacent to internal subdivision roads shall be sized and conveyed in accordance with the LAND DEVELOPMENT CODE. The ultimate width of easements may be based on the number, type, size and depth of the utility lines within the easement.

g. Landscape buffers may be allowed to co-exist with Polk County Utilities Easements as long as landscape berms are not utilized. Should PCU disturb or damage any landscaping or other installed improvements within the easement, PCU shall initiate repairs or install replacements in a timely manner at no cost to the property owner.

h. A triangular corner clip type of Polk County Utilities Easement, that has 20 foot long sides, shall be provided at all intersections of County, State, and Federal rights-of-way.

B. Mains within easements shall not be placed under septic tanks, storm water management facilities, buildings, retention ponds, athletic courts, swimming pools, fountains, patios, or other structures. Privacy walls and foundations shall not be placed parallel over mains or within the structure's zone of influence as based on a soil angle of repose of 45 degrees. Mains shall not be located along interior side or rear lot lines, unless approved in writing by PCU. Placement of mains along storm water retention pond berms may be allowed by PCU on a case by case basis when placed in a casing and if such a configuration results in efficient placement and utilization of the system. Service laterals, clean-outs, and other main related improvements shall not be placed along interior side or rear lot lines.

C. Mains may be accepted for maintenance if the private streets are designed with a urban design cross section in accordance with the LAND DEVELOPMENT CODE. Polk County Utilities Easements shall be dedicated over the entire private street rights-of-way. In addition, sufficient area must be available outside of paved areas to maintain PCU mains.

D. Offsite mains for all developments shall be extended along the entire frontage of each development. The minimum size of the main to be extended by the DEVELOPER shall be the same size that is the minimum main size required to serve the development. In the event that PCU desires to upsize the main, PCU shall reimburse the DEVELOPER in accordance with the provisions of the Utilities Code.

E. Mains with inverts located up to 4 feet below finish grade shall not be located closer than 10 feet from any structure that requires a Certificate of Occupancy. For mains with inverts located deeper than 4 feet below finish grade, the minimum distance of

10 feet shall be increased by one foot for each one foot of increased depth of the main's invert. All horizontal distances shall be rounded up to the nearest whole foot.

F. Unless specifically determined by PCU to be of benefit to its overall system, gravity wastewater infrastructure installed within a non-residential or multi-residential development shall not be subject to ownership, maintenance, or operation by PCU.

PART 3 - DESIGN BASIS

A. Average Daily Flow:

The gravity main design shall be based on ultimate development or projected flow. Average daily wastewater flow shall be calculated by the Equivalent Residential Connections (ERC) flow factors as outlined in the "Utilities Administration Manual".

B. Peak Design Flow:

1. Gravity mains shall be designed on the basis of ultimate development maximum rates of flow, which shall be the product of selected peak factors multiplied by the accumulative average daily flow as calculated above. The minimum peaking factor, provided in Table 510-1 shall be applicable for the range of average daily flow rates.

Table 510-1. Wastewater Peaking Factors.

Minimum Flow Range (gpd)	Peak Factor
Flows up to 100,000	4.0
100,001 to 250,000	3.5
250.000 to 500,000	3.2
500,000 to 1,000,000	3.0
Flows greater than 1,000,000	2.5

C. Design Calculations:

DEVELOPER's ENGINEER shall submit signed, sealed and dated design calculations with the PLANS for all sewer projects. Calculations shall show that gravity mains will have sufficient hydraulic capacity to transport all design flows.

PART 4 - DESIGN AND CONSTRUCTION

A. Minimum Size:

Gravity mains conveying wastewater shall be eight inches in diameter or greater.

B. Pipe Cover:

The minimum cover over gravity mains shall be no less than 36 inches below the finished grade unless approved otherwise by PCU. Gravity main invert depths shall not exceed 20 feet below finished grade. System design shall minimize pipe invert depths

and the number of utility conflicts.

C. Slope:

1. Gravity mains shall be designed and constructed to provide minimum velocities, when flowing full, of no less than two feet per second, based on Manning's formula using an "n" value of 0.013. The minimum slopes as shown in Table 510-2 shall be provided; however, slopes greater than these are desirable.
2. Gravity mains shall have uniform slope between manholes.

Table 510-2. Minimum Design Slope Requirements of Gravity Mains.

Gravity Main Diameter (inches)	Percent Slope (%)
8	0.400
10	0.280
12	0.220
15	0.150
18	0.120
21	0.100
24	0.080
27	0.067
30	0.058
36	0.046
42	0.037

D. Size and Alignments:

Pipe size shall remain constant between manholes and pipe alignment must remain straight between manholes.

E. Additional Requirements:

Storm-water management and drain systems, air conditioner and refrigeration condensation lines, and water-to-water air conditioner lines shall not connect to the gravity main system. All gravity main extensions for future connections shall terminate at a manhole.

PART 5 - MANHOLES

A. Location:

Manholes shall be installed at the end of each gravity main, at all changes in grade, size, or alignment, at all gravity main intersections, and at distances not greater than 400 feet. Private gravity main systems eight inches or larger shall be separated from the PCU gravity main system by a manhole located within and adjacent to the right-of-way line.

B. Type:

1. Standard Manhole:

   Where the difference in elevation between the incoming gravity main invert and the manhole invert is less than 24 inches, the manhole invert shall be filleted to prevent solids deposition. All standards manholes shall be coated in accordance with the appropriate "Approved Materials Checklist".

2. Drop Manhole:

   An interior drop pipe shall be provided for wastewater gravity main entering a manhole where the invert elevation is 24 inches or more above the manhole invert. All drop manholes shall be lined or coated in accordance with the appropriate "Approved Materials Checklist".

3. Master Manhole:

   All gravity and force mains shall discharge their flows into a master manhole prior to the wet well of a wastewater lift station. Force mains intersecting gravity main systems shall discharge into a master manhole at a maximum angle of 45 degrees to the flow path in the manhole. All master manholes shall be lined or coated and have a minimum interior diameter in accordance with Table 510-3.

C. Personnel Access Opening:

Manhole covers and frames shall provide a 24 inch minimum access clearance through the frame opening.

D. Diameter:

Manholes shall have minimum interior diameters from the structure's base to the bottom of the top conical section as based on the main diameter in accordance with Table 510-3.

Table 510-3. Minimum Manhole Diameters.

Gravity Main Diameter (inches)	Minimum Inside Manhole Diameter (inches)
8 to 24	48 (60 for Master Manholes)
24 to 36	60
36 and larger	72

E. Flow Channel:

The flow channel through manholes shall be made to conform in shape and slope to that of the gravity mains. Flow direction changes in excess of 90 degrees shall not be included in gravity main alignments without written permission from PCU. Flow line elevation drop of 0.1 feet across manholes shall be provided. Benching shall have a minimum downward slope of 1/2 inch per foot from the wall of the manhole towards the rim of the flow channel. No bricks shall be used to construct channels.

F. Materials:

1. Manholes shall be constructed of precast units as specified in this Section. Brick or cast-in-place manholes may be permitted on a case by case basis for retrofitting or repair purposes as approved by PCU.
2. Wastewater pipes, valves, and appurtenances shall be constructed of materials as specified in the Section entitled "Wastewater Pipes, Valves, and Appurtenances Specifications".

G. Castings:

All manhole frame and cover sets shall be in accordance with the STANDARD DRAWINGS and the appropriate "Approved Materials Checklist." Manholes that have 5 foot and larger inside diameters shall be provided with two piece covers in accordance with the STANDARD DRAWINGS. Bolt down covers shall be provided where manholes are located in areas outside of improved right-of-way and subject to ponding or flooding.

H. Vehicular Access:

A 12-foot wide access road shall be provided for all manholes that are located outside of State, COUNTY, or local roadways. The access road shall have a sub-base that is stabilized to a Florida Bearing value of 75 psi, and a base that is compacted to 98 percent of AASHTO T-180.

I. Coating or Lining:

A special coating or liner shall be provided for master manholes, drop manholes or any manhole that directly receives a discharge from a force main, as a minimum. A standard coating is required for other manholes. All coatings and liners shall be in accordance with the appropriate "Approved Materials Checklist".

J. Manhole Inserts:

All manhole cover and ring assemblies shall be furnished and installed complete with an insert. The purpose of the insert is to prevent intrusion of storm water, dirt, debris, and to help control emission of odors.

The manhole insert shall be manufactured from corrosion-proof material, such as HDPE, polypropylene, or stainless steel, suitable for atmospheres containing hydrogen sulfide and diluted sulfuric acid and other gases associated with wastewater collection systems. The minimum continuous uniform thickness of a polymer based insert, including all angles, shall be 1/8 inch.

The body of the HPDE insert shall be made of high density polyethylene co-polymer material that meets ASTM D1248, Class A, Category 5, Type 111, and have a minimum impact brittleness temperature of – 180º F. As a minimum, the material

used in the manufacture of the body of the stainless steel insert shall be 16 gage Type 304 stainless steel.

The insert shall be manufactured to the dimensions of the manhole opening to allow easy installation within the manhole frame. The manhole insert shall be manufactured to fit the manhole frame rim upon which the manhole cover rests.

The gasket shall be made of closed cell neoprene. The gasket shall have a pressure sensitive adhesive on one side and be placed under the weight-bearing surface of the insert by the manufacturer. The adhesive shall be compatible with the insert material so as to form a long-lasting bond in either wet or dry conditions.

A lift strap shall be attached to the rising edge of the bowl insert. The lift strap shall be made of 1" wide woven polypropylene web and shall be seared on all cut ends to prevent unraveling. The lift strap shall be attached to the insert by means of a stainless steel rivet. Location of the strap shall provide easy visual location.

Ventilation of the insert shall be by means of a vent hole located on the side wall of the dish ¾" below the lip. The hole thus placed allows a maximum release of 10 gallons per 24 hours and is not affected by debris that might collect in the bottom of the bowl.

The insert shall have proof of durability in traffic impact loads and shall have engineer certified proof of test passing a collapse load of 2200 pounds minimum applied to a 5.5" square area in the center of the insert.

The manhole frame shall be cleaned of all dirt and debris before placing the manhole insert on the rim. The manhole insert shall be fully seated around the manhole frame rim to retard water from seeping between the cover and the manhole frame rim.

K. Pre-Cast Concrete Sections:

1. Pre-cast manholes shall conform to specifications for ASTM C 478 "Pre-cast Reinforced Concrete Manhole Sections", except as otherwise specified below.
2. The minimum wall thickness shall be five inches. Pre-cast manholes shall be constructed with a pre-cast monolithic base structure as shown on the STANDARD DRAWINGS. The minimum base thickness shall be eight inches.
3. Concrete for manholes shall be Type II, 4000 psi at 28 days. Barrel, top and base sections shall have tongue and groove joints. All jointing material shall be a cold adhesive preformed plastic gasket, conforming to ASTM C 443 "Manhole Section Connections". Manholes shall be leak-free.
4. Sections shall be cured by an approved method as per ASTM C 478 for at least 28

days prior to coating and shall not be shipped until at least two days after having been coated.

5. Concrete surfaces shall have form oil, curing compounds, dust, dirt and other interfering materials removed by brush sand blasting and shall be fully cured prior to the application of any coatings.

6. The date of manufacture and the name or trademark of the manufacturer shall be clearly marked on each pre-cast section after coating on exterior surface.

7. Pre-cast concrete top slabs shall be used where cover over the top of the pipe is less than four feet.

8. Lift rings or non-penetrating lift holes shall be provided for handling pre-cast manhole sections.

9. With the exception of master manholes, drop manholes or manholes that have force mains directly discharging into them, the interior surfaces of all manholes shall have a protective bituminous epoxy or epoxy coating formulated to resist corrosion from a wastewater environment. The interior surfaces of master manholes, drop manholes, or manholes that have force mains directly discharging into them shall have a protective cementitious, polymer, high build epoxy, or elastomer based coating or lining in accordance with the appropriate "Approved Materials Checklist". All exterior surfaces of all manholes shall have a protective bituminous epoxy or epoxy coating capable of sealing out moisture. Coatings or liners shall be as specified in the appropriate "Approved Materials Checklist" and applied in strict accordance with the coating or liner manufacturer's recommendations. All coatings and liners shall a minimum of a one year manufacturer's warranty from the date of installation.

L. Liners and Coatings:

1. HDPE Liner:

The light colored HDPE embedment sheeting shall be mechanically bonded to the concrete by integral studs. The liner shall be cast in place by the precast manufacturer and the CONTRACTOR shall field weld the joints. Minimum thickness of liner is 80 mils. All inserts and sleeves for piping shall be in accordance with the liner manufacturer's recommendations and shall result in complete coverage of all pre-cast sections and be capable of passing a spark test.

2. Coatings:

Coatings shall be light in color. The receiving surface shall be prepared using a wet or dry sand blasting surface preparation process in accordance with the manufacturer's recommendations. Coatings shall be applied in accordance with the manufacturer's recommendations. All coatings shall be selected in accordance with

the appropriate "Approved Materials Checklist".

M. Encapsulation:

1. Where a structure is subject to a high ground water condition, is within the boundaries of a storm water management facility, or is subject to flooding, the cone, grade rings, joints, and iron frame shall be encapsulated with a heat shrink-wrap with a minimum final thickness of 100 mils unless otherwise approved by Polk County. The wrap shall have a cross-linked polyolefin backing coated with a protective heat activated adhesive. The wrap shall effectively bond to the substrate in order to provide corrosion and moisture protection. The PLANS shall specifically identify each structure that is designated to receive encapsulation.

N. Castings:

1. Gray iron castings for manhole frames, covers, adjustment rings and other items shall conform to the ASTM A 48, Class 30B. Castings shall be true to pattern in form and dimensions and free of pouring faults and other defects which would impair their strength or otherwise make them unfit for the service intended. The seating surfaces between frames and covers shall be machined to fit true. No plugging or filling will be allowed. Lifting or "pick" holes shall be provided, but shall not penetrate the cover. Casting patterns shall conform to those shown or indicated on the STANDARD DRAWINGS. All manhole frames and covers shall be traffic bearing to meet AASHTO H-20 loadings. Frames shall be suitable for the future addition of a cast iron ring for upward adjustment of top elevation.

O. Precast Concrete Manhole Installation:

1. Bedding, excavation, and backfill shall be in accordance with the Section entitled "Excavations, Backfill, Compaction, and Grading Specifications".
2. Placing Pre-Cast Sections:
   a. The pre-cast base section shall be carefully placed on the prepared bedding so as to be fully and uniformly supported, in true alignment, and ensure that all pipes entering the structure shall be inserted to the proper grade.
   b. Pre-cast manhole sections shall be handled by lift rings or non-penetrating lift holes. Such holes shall be filled with non-shrink grout after installation of the manhole and coated. Lifting of manhole sections shall be as per manufacturer's recommendation.
   c. Sections shall be uniformly supported by the base structure, and shall not bear directly on any of the pipes. Influent and effluent pipes shall be properly installed so as to form an integral watertight unit.
   d. Sections shall be placed and aligned to provide vertical alignment with a 1/4-inch maximum tolerance per five feet of depth.

e. The completed manhole shall be rigid, true to dimensions, and watertight.

3. Placing Castings:

   a. Casting shall be fully bedded in mortar with adjustment courses placed between the frame and manhole. Bricks shall be a minimum two and maximum four courses. Mortar shall conform to ASTM C 270, type M and the bricks shall be clay and conform to ASTM C 216, grade SW, size 3-1/2 inches wide by 8 inches long by 2-1/4 inches high. Adjustment by other approved materials shall be equal to a minimum of 4-1/2 inches and a maximum of 9 inches.

   b. Top of manhole castings located in pavement, shouldered areas, and sidewalks shall be set flush with grade. Top of manhole castings located outside these areas shall be placed in accordance with the STANDARD DRAWINGS.

4. Channels:

   Manhole flow channels shall be constructed with smooth and carefully shaped bottoms, built up sides and benching using cement and brick with no voids. Channels shall conform to the dimension of the adjacent pipe and provide changes in size, grade and alignment evenly. Cement shall be Portland Cement Type II only.

5. Pipe Connections:

   Special care shall be taken to ensure that the openings through which pipes enter the structure are provided with watertight connections. Pipe connections shall conform to ASTM C 923, "Standard Specifications for Resilient Connectors Between Reinforced Concrete Manhole Structures, Pipes, and Laterals".

P. Cleaning:

1. Newly constructed manholes shall be cleaned of any accumulation of silt, debris, or foreign matter of any kind and shall be free from such accumulations at the time of final inspection.

Q. Inspection for Acceptance:

1. The quality of materials, the process of manufacture and the finished sections shall be subject to inspection and approval by PCU. Such inspection may be made at the place of manufacture, at the site after delivery or at both places and the sections shall be subject to rejection at any time due to failure to meet any of the specification requirements; even though sample sections may have been accepted as satisfactory at the place of manufacture. Sections rejected after delivery to the job shall be marked for identification and shall be removed from the job at once. Sections that have been damaged after delivery will be rejected and if already installed, removed and replaced, entirely at the CONTRACTOR’s expense.

2. At the time of inspection, the sections will be carefully examined for compliance

with the specified ASTM designation and with the approved manufacturer's drawings. Sections shall be inspected for general appearance, dimension, "scratch-strength" blisters, cracks, roughness, soundness, etc. The surface shall be dense and close-textured.

3. Manholes shall be inspected by PCU and defective manholes replaced by the CONTRACTOR. Pressure grouting of manholes for repair shall not be accepted.

PART 6 - SERVICE LATERAL CONNECTIONS

A. Service connections shall be as shown in the STANDARD DRAWINGS.

B. Service connections shall be permanently marked by cutting an "S" in the curb in direct alignment with the wye and the installation of a stake at the temporary plug to indicate the location of the service pipe as per the STANDARD DRAWINGS.

C. Size and Length:

Service laterals and fittings shall be a minimum of four inches in diameter for single services and six inches in diameter for double services. Service laterals shall be laid perpendicular to the receiving main, except in cul-de-sacs where service laterals may be connected to an upstream terminal manhole. Service laterals shall not exceed 150 feet. Service laterals shall terminate with a temporary plug at the right-of-way with individual cleanouts installed by the building's plumber in accordance with the STANDARD DRAWINGS.

D. Slope:

Service laterals shall have a minimum slope of one percent.

E. If a floor slab elevation is lower than the closest manhole top elevation, then a private prefabricated pump station with a check valve (for each occurrence) shall be required to pump wastewater to the lateral at the cleanout in the road right-of-way. The private pump station shall be operated and maintained by the property OWNER.

F. Connection:

Service laterals shall not be directly connected to sanitary manholes, except at terminal manholes. A maximum of three service laterals maybe connected directly to a terminal manhole. Incoming flows shall not be more than 90 degrees to the flow path in the manhole.

PART 7 - GREASE TRAPS, INTERCEPTORS, AND SEPARATORS

A. Grease interceptors shall be required for all commercial establishments where food will be processed or cooked in any way. The grease interceptor will be sized as defined below and will have a minimum volume of 750 gallons. All kitchen waste lines will be routed through the grease interceptor. However, no domestic waste will be allowed to enter the grease interceptor. All wastewater flow from the kitchen areas of these establishments shall flow through approved grease interceptors prior to entering the

PCU system. In some cases, a grinder may be required for meat and fish processing plants.

B. Grease interceptors shall be located outside of buildings.

C. Sizing:

Refer to Table 510-4 for sizing requirements.

D. Grease interceptors shall be placed where the proposed food waste line will have adequate slope and be accessible for maintenance and inspection at all times.

E. Under-the-Counter Grease Traps:

1. Where location of an outside grease interceptor is determined not feasible by PCU, PCU may approve an under-the-counter grease trap on a case-by-case basis. A commercial establishment where food will be processed or handled will only be considered for an under-the-counter grease trap if it meets all of the following criteria:
   a. The building must be in existence at the time the under-the-counter grease trap is being proposed;
   b. The restaurant or food preparation establishment must have less than 600 gpd of wastewater flow;
   c. An under-the-counter grease trap must be installed on all drain fixtures in the food preparation areas; and
   d. ENGINEER shall consult with PCU personnel before finalizing the design.

Table 510-4. Sizing Requirements for Grease Traps, Interceptors, and Separators.

Type	Unit	Grease Interceptor/ Trap Capacity Single (gallons)	Grease Interceptor/ Trap Capacity In Series (gallons)	Grease, Oil, or Sand Separator Capacity (gallons)	Lint & Sand Separator Capacity (gallons)
Restaurant	seat	20	10		
Restaurant – Fast Food	seat	10	5		
Restaurant – 24-hour	seat	30	15		
Convention Center/ Manufacturing Cafeteria	meal	3	1.5		
Vehicle Repair, Maintenance, or Equipment Wash Facility	bay			200*	
Facility Using Commercial-Type Laundry Machines	machine				100*

* Minimum volume of 750 gallons.

PART 8 - SERVICE LOCATION AND IDENTIFICATION

A. The location of all service lines shall be as shown on the STANDARD DRAWINGS. On curbed streets, the exact location of each service shall be adequately and permanently identified using durable plastic green colored pavement markers that states “Wastewater Service” and “Call Before You Dig” as specified by the appropriate “Approved Materials Checklist”. Each marker shall be securely attached to the curb in accordance with the manufacturer’s guidelines approximately 6 inches from the top of the curb.

B. Where no curb exists, the exact location of each service shall be adequately and permanently identified using durable plastic green colored pavement markers that states “Wastewater Service” and “Call Before You Dig” as specified by the appropriate “Approved Materials Checklist”. Each marker shall be securely attached to the pavement in accordance with the manufacturer’s guidelines approximately 6 inches from the edge of pavement.

CHAPTER 5 **WASTEWATER** Rev December 2012

Section 511 **Wastewater Force Main Standards** December 2010

PART 1 - GENERAL

A. Force main systems shall be designed for the estimated tributary population, as delineated in the approved PCU's MASTER PLAN (latest edition) for the subject RUSA. When DEVELOPER's wastewater MASTER PLANs are required, force mains shall be designed for the estimated ultimate build out, as approved by PCU.

PART 2 – LOCATION

A. Refer to "Gravity Wastewater System Standards and Specifications".

PART 3 – DESIGN BASIS

A. Average Daily Flow and Peak Flows:

Average daily wastewater flow shall be calculated by referencing the equivalent residential unit flow factors as outlined in the "Utilities Administration Manual". Peak hourly wastewater flow rates shall be calculated by referencing the minimum peaking factors as specified in the Section entitled "Gravity Wastewater System Standards and Specifications".

B. Design Calculations:

The ENGINEER shall submit signed, sealed, and dated design calculations along with a compact disc copy of the SewerCad based model with the PLANS for all PCU projects. Calculations shall show that the mains will have sufficient hydraulic capacity for peak hourly flows while meeting the requirements of this Section. Minor head losses shall be incorporated in the calculations.

PART 4 - DESIGN

A. Pipe Cover:

A minimum cover of 36 inches shall be provided.

B. Velocity and Diameter:

At design pumping rates, a cleansing velocity of at least 2.0 feet per second shall be maintained. Polk County reserves the right to require velocities > 2.0 ft/sec in applications deemed appropriate. Maximum velocity at design pumping rates should not exceed six feet per second. The minimum force main diameter shall be four inches when connected to a single lift station and is internal of a single development. The ENGINEER shall also provide calculations showing that upsizing the proposed offsite force main has been considered in an effort to downsize the proposed lift station pumps. Only 4, 6, 8, 10, 12, 16, 20, 24, 30, 36, 42, 48, and 54-inch diameter force mains shall be permitted. Variations in main size may be authorized by the COUNTY when deemed appropriate provided that the existing or proposed level of service is maintained and operational maintenance and responsibility is established to the benefit of the COUNTY. Using the PCU approved hydraulic modeling standards contained within this MANUAL, the ENGINEER shall determine on a case by case basis if it is

necessary for all proposed HDPE pipe installations to be increased by one pipe size above all proposed or existing adjacent PVC and Ductile Iron Pipe installations.

C. Design Friction Losses:

Friction losses through mains shall be based on the Hazen-Williams or Darcy-Wiesbach formula. In the use of the Hazen-Williams formula, the value for "C" shall be 130.

D. Design Pressure and Restraint:

1. The main and fittings, including all restrained joint pipe fittings, shall be designed to withstand pump operating pressures and pressure surges, but not less than 150 psi. The restrained joint lengths shall be calculated consistent with the table format shown in the STANDARD DRAWINGS.

2. In the event that it is necessary to locate proposed mains or leave existing mains longitudinally under any part of a proposed roadway subject to regular non-residential traffic or with speed limits above 30 miles per hour, such mains shall have restrained joints.

E. Pigging Ports:

Provision for the installation of permanent access points into and egress points out of the piping system for pigging and cleaning purposes shall be incorporated into 8 inch and larger force mains. Wherever possible, pigging ports shall be located and incorporated within the lift station sites. Permanent and temporary access and egress points shall conform to the STANDARD DRAWINGS.

F. Mains shall be designed with uniform positive or negative slopes to avoid undulations and minimize high points and low points in the profile.

G. Offsite mains for all developments shall be extended along the entire frontage of each development. The minimum size of the main to be extended by the DEVELOPER shall be the same size that is the minimum main size required to serve the development. In the event that PCU desires to upsize the main, PCU shall reimburse the DEVELOPER in accordance with the provisions of the Utilities Code.

F. Mains with inverts located up to 5 feet below finish grade shall not be located closer than 10 feet from any structure that requires a Certificate of Occupancy. For mains with inverts located deeper than 5 feet below finish grade, the minimum distance of 10 feet shall be increased by one foot for each one foot of increased depth of the main's invert. All horizontal distances shall be rounded up to the nearest whole foot.

G. Unless specifically determined by PCU to be of benefit to its overall system, wastewater force main infrastructure installed within a non-residential or multi-residential development shall not be subject to ownership, maintenance, or operation by PCU.

H. Materials:

1. Force mains shall be constructed of PVC pipe.

2. HDPE may be used in specific applications as specified in this MANUAL or as approved by PCU. Using the PCU approved hydraulic modeling standards contained within this MANUAL, the ENGINEER shall determine on a case by case basis if it is necessary for all proposed HDPE pipe installations to be increased by one pipe size above all proposed or existing adjacent PVC and Ductile Iron Pipe installations.

PART 5 – TERMINATION POINT

A. Force mains shall enter a gravity sewer system a maximum of one foot above the flow line of the receiving master manhole and be orientated no greater than 45 degrees to the flow path in the manhole. The interior surfaces of the receiving master manhole shall have a protective coating or lining. Force mains shall terminate directly into a wastewater master manhole or connect to another force main. Termination into gravity mains is not allowed.

PART 6 – AUTOMATIC AIR RELEASE VALVES

A. Automatic air release valves of appropriate size and number shall be provided to prevent air locking formation. Automatic combination air and vacuum release valves shall be utilized to prevent both air locking and vacuum formation. All such valves are required at the high points of the main or as specified by PCU. Valves shall be clearly delineated on the main profile in the STANDARD DRAWINGS. The ENGINEER shall submit calculations to PCU justifying the valve sizes and numbers as specified by AWWA M-51 “Air Release, Air/Vacuum, and Combination Air Valves”.

PART 7 – VALVES

A. Valves shall be located on force main systems to facilitate effective isolation of the pipe system for repairs and maintenance. In accordance with the recommendations issued by valve manufacturers, gate valves shall not be installed on their side when used within a force main system. On straight runs of force mains, valve spacing shall not exceed 2,000 feet. Additional valves shall be provided where force mains intersect to facilitate isolation of pipe segments. Valves shall be installed on private forces and located adjacent to and within public rights-of-way lines or Polk County Utilities Easement boundary lines in order to isolate private force mains and lift stations from the PCU system in case of the malfunction of such improvements.

PART 8 – FORCE MAIN VALVE LOCATION AND IDENTIFICATION

A. On curbed streets, the exact location of each force main valve shall be adequately and permanently identified using durable plastic green colored pavement markers that states “Force Main Valve” and “Call 811 Before You Dig” as specified by the appropriate “Approved Materials Checklist”. Each marker shall be securely attached to the curb in accordance with the manufacturer’s guidelines approximately 6 inches from the top of the curb.

B. Where no curb exists, the exact location of each force main valve shall be adequately and permanently identified using durable plastic green colored pavement markers that states “Force Main Valve” and “Call 811 Before You Dig” as specified by the appropriate “Approved Materials Checklist”. Each marker shall be securely attached to the pavement in accordance with the manufacturer’s guidelines approximately 6 inches from the edge of pavement.

CHAPTER 5 WASTEWATER

Section 512 Wastewater Lift Station Standards and Specifications

December 2010

PART 1 – GENERAL

A. The design standards outlined in this Section apply to all wastewater lift stations within the jurisdiction of this MANUAL. All stations shall be submersible type stations. The basis of design shall be reviewed and approved by PCU.

B. Lift stations shall be designed for the estimated ultimate tributary population, as delineated in one of the approved PCU MASTER PLANS (latest edition) for the subject RUSA. When a DEVELOPER's master plan is required, lift stations shall be designed for the estimated ultimate build out of that DEVELOPMENT, as approved by PCU.

C. Unless specifically determined by PCU to be of benefit to its overall system, wastewater lift stations installed within a non-residential or multi-residential development shall not be subject to ownership, maintenance, or operation by PCU.

D. Regional lift stations shall have wet wells designed and constructed to serve the lowest developable point on all adjacent vacant tracts of land surrounding a project by means of gravity flow only. The appropriate sized Polk County Utilities Easement(s) shall be provided by the DEVELOPER so that the gravity wastewater mains from all such vacant tracts of land can easily be connected to the wet well of the regional lift station.

E. All lift stations to be dedicated to and operated by PCU shall be of the municipal rated type.

PART 2 – LOCATION

A. With the exception of private lift stations serving single owner properties, all lift stations shall be located on fee simple tracts of land adjacent to rights-of-way and preferably sharing the same general location as storm-water management facilities. Private lift stations shall not be located directly adjacent to public thoroughfares. No part of a lift station, regardless of ownership, shall be located in a roadway median, in the middle of a cul-de-sac, within any portion of a public or private right-of-way, directly in front or behind of an occupied structure on the same side of the roadway, or less than 50 feet perpendicularly from the intersection of two or more rights-of-way. The actual location of all equipment within a lift station site shall be in accordance with the STANDARD DRAWINGS or as approved by PCU.

B. No public or private easement or non-PCU infrastructure of any kind shall be permitted to cross a tract containing a PCU lift station without written approval by PCU. Where conflicts are unavoidable in the opinion of PCU, the depth of the lift station tract shall be extended so that the required minimum dimensioned lift station site is located directly behind and adjacent to the conflicting easement or infrastructure.

C. Permanent and temporary vehicular access to a lift station shall freely accommodate the turning movements of a 40 foot long and 9 foot wide single unit truck vehicle with a 28 foot wheelbase as specified by the Institute of Transportation Engineers. Vehicular backup distance shall not exceed 60 linear feet. A T-shaped turn-around with the

appropriate radii and pavement lengths may be considered as part of the access design. The design of the access driveway or roadway shall insure that the ramp break-over angle of a two wheel drive pickup truck with a standard wheelbase is accommodated along its entire length.

D. Driveways to lift stations along low traffic volume two lane residential roadways shall not be less than 23 feet in length from the lift station's gates to the adjacent roadway's edge of pavement or back of curb so as not to totally block both lanes of travel. The driveway length along all other roadways shall not be less than 45 feet so as to accommodate the entire length of the vehicle described above without impeding traffic in any travel lane. Driveway within PCU lift station tract shall be a minimum of 40 feet in length to accommodate the entire length of the vehicle described above within the tract.

PART 3 - DESIGN BASIS

A. Average Daily Flow:

The wastewater lift station design shall be based on ultimate development or projected flow. Average daily wastewater flow shall be calculated by the Equivalent Residential Unit flow factors as outlined in the "Utilities Administration Manual".

B. Peak Design Flow:

The design pumping capability of the station shall be based upon the peak design flow, which shall be calculated by multiplying the design average flow with the applicable minimum peaking factors as outlined in Table 510-1, "Wastewater Peaking Factors".

C. Number of Pumps:

Minimum number of pumps is determined by the peak design flow as shown in Table 512-1 below.

Table 512-1. Required Number of Pumps Based on Peak Design Flow.

Peak Design Flow (gpm)	Number of Pumps
Less than 1,000	2
1,000 to less than 2,500	3
2,500 to less than 4,000	4
4,000 or greater	5

D. Pump and Motor Selection:

The lift station shall be capable of pumping the peak design flow with the largest pumping unit out of service. Pumps shall be capable of meeting all system hydraulic conditions without overloading the motors.

E. Design Calculations:

The ENGINEER shall submit signed, sealed and dated design calculations for all wastewater lift stations. Calculations shall include high head and low head condition system curves plotted on the manufacturer's pump curve, hydraulic analysis of force main system including all friction and minor losses, operating cycles with wet well sizing, and buoyancy calculations. The design basis for all calculations shall provide for 100 percent of all receiving system pumps to be operating at the time that the proposed lift station is to be operating. System curves shall verify that the pumps are operating at peak efficiency in accordance with the manufacturer's specifications and are suitable for the design flow application. Pump and motor selection shall be designed based on the hydraulic grade line at the point of connection as based on PCU's MASTER PLAN model for the regional utility service area affected by the proposed development. Each component of the lift station shall be designed to accommodate the development's design flow at the prevailing system conditions at the time of build out, i.e., utilize impeller change-outs to adjust initial flow and head pressure to meet final conditions, etc.

PART 4 - DESIGN

A. Flooding:

1. When siting the lift station, the ENGINEER shall consider the potential for damage or interruption of operation because of flooding. Lift station structures, electrical equipment, and mechanical equipment shall be designed to be protected from physical damage by a 100-year 24-hour storm event. The bottom of all station control and electrical boxes shall be no lower than the 100-year 24-hour Flood Elevation. In no case shall the top elevation of the control panel exceed the maximum distance from the lift station's concrete pad that is allowed by the NEC. In such cases, the elevation of the lift station's entire concrete pad shall be raised until the maximum distance allowed by the NEC is achieved.
2. Wastewater lift stations shall remain fully operational and accessible during a 25-year 24-hour storm event. The top elevation of the wet well shall be no lower than the 25-year 24-hour Flood Elevation. On a case-by-case basis, the top elevation of the wet well may be lower if it can be shown that no drainage runoff from the surrounding areas will flow to the lift station site at any time.
3. No occupied structures shall have a floor, which is connected by gravity flow to a PCU wastewater system, with a finish floor elevation below the top elevation of the lift station that serves it. Regulations of local, state and federal agencies regarding flood plains shall be considered.
4. The lift station site design shall insure positive storm water drainage radiates outward from the center of the wet well to the boundaries of the site and away from the lift station site. The access driveway or roadway shall not allow storm water to be conveyed onto the lift station site.

B. Accessibility:

The lift station shall be readily accessible by maintenance vehicles during all weather

conditions including a 25-year 24-hour storm event. The lift station driveway shall be concrete onsite while the offsite portion may be either concrete or asphaltic concrete in accordance with the STANDARD DRAWINGS. In a phased development, a temporary 12 foot wide paved asphalt access road (1½ inch thick FDOT SP-9.5 Asphaltic Concrete, 6 inch thick LBR 40 Limerock Base, and 6 inch thick FBV 75 Sub-Base) within the appropriately sized Polk County Utilities Easement, shall be provided by the DEVELOPER and utilized by PCU until the temporary access is replaced with a platted roadway that complies with this MANUAL.

C. Boundary Survey:

A current BOUNDARY SURVEY shall be required at the lift station startup test and inspection. The DEVELOPER shall bear the entire expense of rectifying WORK improperly installed due to the construction of improvements not totally within the fee simple site to be dedicated to PCU. An electronic version and three copies of the certified BOUNDARY SURVEY shall be required.

D. Pump Requirements:

1. Pump rails and base elbows shall be capable of accepting a "Hydromatic" brand pump by sliding a pump down the rails and accomplish a positive seal to the base elbow with no adapters. When other pump brands are considered as specified in the appropriate "Approved Materials Checklist", they shall be required to be adaptable to the above "Hydromatic" standards. Submersible pumps shall be readily removable and replaceable without dewatering the wet well or disconnecting any piping in the wet well.
2. Pumps shall be capable of handling raw sewage and passing solids of at least three inches in diameter. Pump suction and discharge openings shall be at least four inches in diameter. No pumps with less than five horsepower motors will be acceptable.

E. Major Component Requirements:
The major requirements for a lift station are specified in the following table.

Table 512-2. Lift Station Major Component Requirements.

COMPONENT		NUMBER OF PUMPS		
		2	3	4 or More
1	Site Plan	see #1 below	see #1 below	see #1 below
2	Number of Wet Wells	1	1	2
	Wet Well Structure Type	precast	precast	cast-in-place or precast
3	Piping (below or above ground)	below or above *	above	above

4	Site Enclosure	chain link	chain link or wall	wall
4a	Access Gate	swing	swing or sliding	swing or sliding
5	Flow Meters	no	yes	yes
6	Odor Control System	*	*	*
7	SCADA and Control Panel	yes	yes	yes
8	Generator	*	yes	yes
9	A/C MCC	no	no	yes
10	VFD	no	*	*
11	Wet Well / Coating/ Liner	yes	yes	yes
12	Level Control	float ball and transducer	float ball and transducer	float ball and transducer
13	Automatic Gear Actuator	*	*	*
14	Wet Well Fall Protection System	yes	yes	yes

NOTE: Please refer below for component explanation.

** In accordance with MANUAL or as determined by PCU for proper system operation.*

1. Site Sizing, Tract, and Easement Requirements:

   Lift station sites shall be sized as delineated in the STANDARD DRAWINGS for the duplex, triplex, or more than three pumps per the lift station site plans. The DEVELOPER shall dedicate the lift station site and driveway by plat or separate instrument to PCU. Dedicated easements shall be shown as specified on the lift station site plans in the STANDARD DRAWINGS. All temporary access roads shall be improved to accommodate heavy truck traffic and dedicated to PCU, with a minimum 20 foot wide Polk County Utilities Easement that provides for ingress and egress to the lift station.

2. Wet Well Requirements:
   a. Single wet well:
      i. The wet well for a duplex lift station shall have a minimum six feet inside diameter. If the design requirements require 35 horsepower pumps or larger for a duplex lift station (less than 1000 gpm), a minimum 10-foot inside diameter wet well shall be required**.** Sufficient depth shall be provided to accommodate cycle time and motor submergence.

ii. The wet well for a triplex lift station shall have a minimum 12-foot inside diameter. Sufficient depth shall be provided to accommodate cycle time and motor submergence.

iii. In determining the cycle time, no consideration of volume shall be used for the volume below the top of the pump or the manufacturer's minimum submergence recommendation, whichever is greater.

iv. Pumping levels shall be set to provide a minimum capacity between operational water levels sufficient to allow a minimum of ten minutes in one pumping cycle. The minimum time between successive starts of the same pump shall be ten minutes.

v. For duplex lift stations (less than 1,000 GPM), the effective volume (from pump off elevation to the invert of the gravity pipe) shall be based on a fill time of 30 minutes at Average Daily Flow (ADF). For triplex lift stations, the fill time shall not exceed 10 minutes at ADF. The high liquid level in the wet well (storage capacity) shall not exceed the invert elevation of the lowest inflow pipe. When new development proposes connection to an existing lift station, vertical storage criteria within the wet well shall not be applied to the existing lift station without consideration of other factors including, but not limited to generator installation.

vi. Pump-off water levels shall provide adequate submergence to preclude pump inlet cavitations. Design maximum water levels shall not exceed the invert elevation of the influent pipe.

vii. The wet well floor shall have a minimum slope of one to one to the hopper bottom. The horizontal area of the hopper bottom shall be no greater than necessary for proper installation and function of the pump inlet.

viii. Interior ladders shall not be permitted.

ix. Only one inlet connection shall be permitted to a wet well.

x. For buoyancy calculations, the soil ring weight (from the outer face of the bottom slab to the outer edge of the wet well) shall be 100 percent of the total weight of the soil ring. The net density of the soil shall be used for calculating weight, i.e., soil density less the water density (62.4 pounds per cubic foot). A minimum safety factor of 1.1 shall be achieved.

b. Dual wet wells:

When required, dual wet wells shall be designed with the same criteria as a single wet well; except with master manhole and valving to separate either wet well. The influent slope of the wet well floor shall have a minimum slope one inch per foot to the hopper bottom.

3. Piping Above Ground:

Piping shall be installed above ground with a concrete slab.

4. Site Enclosures:

All lift station sites shall be enclosed. Duplex lift stations shall have six-foot high factory applied black vinyl security type chain link fencing with two offset six foot high chain link double swing gates or one single six foot high chain link rolling type gate as specified by PCU. PCU may require that lift stations with more than two pumps have eight-foot high concrete masonry unit perimeter walls and two offset eight-foot high minimum aluminum, double-hung swing gates instead of the required chain link fencing and gates. The use or substitution of chain link fencing slats, vinyl fencing, or wood fencing instead of or in addition to the black vinyl coated chain link fencing shall be prohibited. Three strands of barb wire shall be installed on top of the chain link fencing at the direction of PCU if it is determined to be necessary for site security.

Florida-Friendly Landscaping may be permitted along the outside perimeter fencing of the lift station site as long as the center of all trees are no closer than fifteen feet and the center of all other non-tree type plantings are no closer than five feet. Maintenance and irrigation of the landscaping shall be the responsibility of the installing entity and not PCU.

5. Flow Meters:

   Indicating, totalizing, and recording flow measurement devices shall be provided at lift stations where required in Table 512-2. Bypass piping around the meter shall be provided for all stations with flow meters to facilitate meter maintenance.

6. Odor Control System:

   Provide a complete system for the control of hydrogen sulfide gas and other wastewater odors as required and specified by PCU.

7. SCADA:
   a. Control Panel:

      Panel shall be of type to match lift station configuration (number of pumps, control features, etc) as determined by PCU. Refer to the Section 517 entitled "SCADA and Control Panel Specifications" for additional information.

8. Emergency Generator:
   a. Permanent stationary emergency generator sets shall be provided for all lift stations that utilize a 12 inch and larger force main, receive flows from one or more contributing lift stations, that receive flow from a generator equipped tributary lift station, pump more than 1000 gallons per minute, or as required by FDEP.
   b. The ENGINEER shall size the generator and fuel tank as required by PCU and submit the name of the manufacturer, burn rate specifications, and sizing calculations to PCU for review and approval. The generator and fuel tank manufacturer shall be as specified in the appropriate "Approved Materials Checklist".
   c. Lift stations shall be provided with manual transfer switches or emergency

power receptacles, except for those lift stations with permanent stationary emergency generator sets, as specified in the Section 516 entitled "Wastewater Lift Station Electrical System Specifications".

9. Air Conditioned Motor Control Center:

   When a motor control center is required, a fully enclosed structure of concrete masonry unit construction with a stucco exterior on a concrete slab, prestressed concrete roof slab with built-up roofing, R-4 insulated or greater interior walls, and R-19 insulated suspended ceiling shall be provided. As specifically approved by PCU, low maintenance and long life prefabricated modular structures may be substituted for the above required concrete masonry unit based structures. A high temperature alarm with dry contact shall be provided for connection to the SCADA control panel.

10. Variable Frequency Drive Motors:

    Where variable frequency drives (VFDs) are installed, motors shall be rated for inverter duty operation and shall indicate inverter duty rated on the nameplate.

11. Wet Well Liner:

    Wet well liner to be provided as specified in the appropriate "Approved Materials Checklist".

12. Level Control:

    Requirements in the Section entitled "Wastewater Lift Station Electrical System Specifications" shall apply.

13. Structural Bearing Design:

    a. All wet wellsand other such buried structure that are not subject to vehicular traffic, including their associated lids and covers, shall be designed utilizing a minimum 300 pound per square foot load bearing design.

    b. All wet wellsand other such buried structures that are subject to vehicular traffic, including their associated lids and covers, shall be designed utilizing a H-20 traffic load bearing design.

F. Electrical Equipment, Power Supply and Power Cords:

Requirements in the Sections entitled "Submersible Wastewater Pump Specifications" and "Wastewater Lift Station Electrical System Specifications" shall apply.

G. Controls:

Requirements in the Sections 516 and 517 entitled "Wastewater Lift Station Electrical System Specifications" and "SCADA and Control Panel Specifications" shall apply.

PART 5 - CONSTRUCTION

5.01 SCOPE OF WORK

A. This Section applies to the equipment, materials, site work, fences or walls, and appurtenances for the installation of wastewater lift stations.

B. Shop drawings for all components of a proposed lift station, not addressed in the appropriate "Approved Materials Checklist", shall be submitted to PCU for review and approval prior to construction.

C. All liners and coatings shall have a minimum of a one year warranty from the date of installation.

5.02 WET WELL

A. Wet Well Liners and Coatings:

1. HDPE Liner:

   The light colored HDPE embedment sheeting shall be mechanically bonded to the concrete by integral studs. The liner shall be cast in place by the precast manufacturer and the CONTRACTOR shall field weld the joints. Minimum thickness of liner is 80 mils. All inserts and sleeves for piping shall be in accordance with the liner manufacturer's recommendations and shall result in complete coverage of all pre-cast sections and be capable of passing a spark test.

2. Coatings:

   Coatings shall be light in color, applied in accordance with the manufacturer's recommendations using dry sand blasting surface preparations, and in accordance with the appropriate "Approved Materials Checklist".

B. Pre-cast Concrete Sections:

1. Pre-cast wet wells shall conform to specifications for ASTM C 478 "Pre-cast Reinforced Concrete Manhole Sections", except as otherwise specified below.
2. The minimum wall thickness shall be eight inches. Pre-cast wet-wells shall be constructed with a pre-cast monolithic base structure as shown on the STANDARD DRAWINGS. The minimum base thickness shall be eight inches.
3. Concrete shall be Type II, 4000 psi at 28 days. All sections shall have tongue and groove joints except for top slab. All jointing material shall be a cold adhesive preformed plastic gasket, conforming to ASTM C 443 "Manhole Section Connections".
4. The date of manufacture and the name or trademark of the manufacturer shall be clearly marked on each pre-cast section.
5. Sections shall be cured by an approved method as per ASTM C 478 for at least 28 days prior to coating and shall not be shipped until at least two days after having been coated.

6. Pre-cast concrete top slabs shall be used.
7. Lift rings or non-penetrating lift holes shall be provided for handling pre-cast sections. Non-penetrating lift holes shall be filled with non-shrink grout after installation of the sections. The grout shall be coated after it as cured.
8. Concrete surfaces shall have form oil, curing compounds, dust, dirt and other interfering materials removed by brush and/or sand blasting and shall be fully cured prior to the application of any coatings.
9. Exterior surfaces shall have a protective coating, which shall be applied in strict accordance with the coating manufacturer's recommendations. All interior wall and underside top surfaces shall have a protective liner as specified above.

C. Cast-in-Place Bases:

Cast-in-place bases shall be utilized only when specifically approved by PCU. Unless otherwise specified, cast-in-place bases shall be at least eight inches in thickness. Reinforcement and connection to the riser sections shall be designed by the ENGINEER and submitted to PCU for approval.

D. Pipe Penetration:

The void between the opening in the wet well structure and the exterior of the force main piping that penetrates the walls of the wet well shall be sealed by using compression type wall seals or non-shrink cement grout.

5.03 ACCESS FRAMES AND DOORS

A. The wet well shall be furnished with an access frame and door(s) along with an integrated fall protection system as specified in the appropriate "Approved Materials Checklist". Equipment furnished shall include the necessary aluminum access frames, complete with hinged and slide bar equipped doors, stainless steel upper guide holder, and level sensor cable holder. Doors shall be of aluminum diamond plate.

B. Wet well access doors shall be sized according to the pump manufacturer's recommendations. As a minimum, doors shall be sized to allow pumps to pass through the hatch opening with a 1 inch clearance between the back of the pump volute and the door. The front hatch frame shall have a minimum 8 inch clearance from the front of the pump volute. Double doors shall be used wherever possible.

C. Wet well hinges shall not be mounted on the same side as the guide rails and float/control ball rack.

D. The access frame and door(s) shall have stainless steel hardware.

E. Access doors that are not exposed to vehicular traffic shall have a load rating of 300 pounds per square foot. Access doors exposed to vehicular traffic shall have a H-20 traffic load rating. The support beam for load rating shall be mounted on the door.

5.04 ODOR CONTROL SYSTEM

A. In general, it shall be PCU's responsibility to furnish and install a complete system for the control of hydrogen sulfide gas and other sewer odors unless otherwise determined by PCU. Refer to the appropriate "Approved Materials Checklist".

5.05 CHAIN LINK FENCE

A. The CONTRACTOR shall furnish and erect a chain link fence as required in this Section.

B. Materials:

1. The fabric, posts, fastenings, fittings and other accessories for chain link fence shall meet the requirements of AASHTO M 181 with the following changes:
   a. The weight of coating of wire fabric shall be 1.2 ounces of zinc per square foot (Class B);
   b. The galvanizing of steel materials shall be hot-dipped galvanized; and
   c. The weight of coating on posts and braces shall be 1.8 ounces of zinc per square foot, both inside and outside to meet the requirements of AASHTO M 111.
2. The base metal of the fabric shall be a good commercial quality 9-gauge steel wire. The fabric shall be of uniform quality and shall be 6-foot high with a 2-inch mesh size
3. All posts and rails shall be in accordance with the following schedule:
   a. End, corner and pull posts – 2-3/8 inches OD, Schedule 40;
   b. Line posts and gate frames, as needed for support of gate size Schedule 40; and
   c. Gate Posts – 3-inch OD, Schedule 40
      i. Post braces and top rail – 1-5/8-inch OD, Schedule 20;
      ii. All gate openings shall be a minimum of 16 feet wide, double hung.
4. Tension wire shall be 0.177 inch coiled spring wire tensioned along the bottom of the fabric and shall be coated similarly to the wire fabric.
5. Miscellaneous fittings and hardware shall be zinc coated commercial quality or better steel or zinc coated cast or malleable iron as appropriate for the article.
6. All surfaces of the fabric, posts, fittings, and miscellaneous hardware shall have a factory applied black vinyl coating.
7. Post caps, designed to provide a drive fit over the top of the tubular post to exclude moisture, shall be provided.
8. All gates shall be capable of being secured by the use of a security type padlock with a standard length shank. The gates shall be securely positioned in line with the adjacent fence sections by the use of an attached vertically sliding steel rod inserted in a slightly larger one inch deep drilled hole in the concrete driveway.
9. Where required by PCU, galvanized steel barbed wire shall be installed on top of the lift station perimeter fence, including the gates, to an additional height of 1 vertical

foot utilizing 3 strands of wire evenly placed upon galvanized steel supports that angle outwardly 45 degrees. The supports on the gates shall be installed in the vertical position inline with the gate fabric.

5.06 BLOCK WALL

A. The CONTRACTOR shall furnish and erect a block wall as required in this Section .

B. Block wall shall be one-sided split face concrete masonry unit type construction and shall be painted with graffiti resistant material. Split face concrete masonry units shall conform to ASTM C90 normal weight Type 2, solid load bearing units. Units shall be 8-inch by 8-inch by 16-inch nominal size. Minimum compressive strength on the net area (average of three units) when tested in accordance with ASTM C140 shall be 2,000 psi on the net area. Minimum compressive strength of any individual unit shall be not less than 80 percent of the required three-unit average. Units shall be colored with integrally mixed, alkali-stable, lightfast and weather-resistant pigment. Color shall be maintained uniformly throughout the job within the normal manufacturing tolerances. Integral water repellant shall be a liquid polymer admixture resistant to water penetration with a Class E rating in accordance with ASTM E514-74. Top two courses of wall shall be poured and finished.

5.07 GATES

A. Chain Link Fencing Gates:

1. Swing gates shall be two, 8-foot wide double-hung gates as indicated on the STANDARD DRAWINGS and hinged to swing through 180 degrees from closed to open. Gates shall be complete with latches, locking device, stops keeper, hinges, fabric and braces. Gates shall be the same height as the fence and the gate fabric shall be the same as the fence fabric.
2. Gate leaves shall have truss rods or intermediate braces. Gate leaves eight feet or more in width shall have intermediate braces and diagonal truss rods or shall have tubular members as necessary to provide rigid construction, free from sag or twist.

B. Block Wall Gates:

When block walls are required, two, 8-foot wide ornamental aluminum double-hung gates shall be installed. The gates shall be the same height as the wall. The aluminum gates shall be either black anodized or painted black. Gates shall swing through 180 degrees from closed to open and shall be complete with latches, locking device, stops keeper, hinges, fabric and braces.

5.08 WEED CONTROL

A. A 60 mil thick geo-fabric shall be installed under all graveled and rocked areas for weed control. The fabric shall be a heat bonded, non-woven, polypropylene, which is inert to

biological degradation and resistant to naturally encountered chemicals, alkalis and acids. The fabric shall provide passage of air and liquids.

5.09 STAINLESS STEEL SLUICE GATES

A. When it is necessary to design wet wells with 3 pumps or more to allow for the isolation of individual pumps using chambers, stainless steel sluice gates shall be utilized. Each sluice gate shall be of the rising stem type, self-contained, and permit separate lifting.

1. Sluice gates, frames, guides, wedges, fasteners, and anchors shall be fabricated type 316 stainless steel construction with resilient seats. A de-seating system shall be incorporated into each gate.
2. Actuator pedestals shall be galvanized steel and stem guides shall be stainless steel with adjustable guide bushing.
3. Minimum material thickness shall be 3/8-inch. Frame member shall be 3/8-inch by 3-inch by 3-inch hot rolled angle.
4. The gate seat shall have a neoprene or hypalon seal around the perimeter.
5. Gates shall be supplied with accessories, including lift and lift stem, extension stem, stem guides, stem covers, wall thimbles, brackets and stop nuts. Gates shall be designed to meet seating and unseating heads.
6. Sluice gates and accessories shall operate satisfactory under the conditions of installation, including operating frequency ranging from twice daily to periods of prolonged idleness.
7. Opposing gate and frame mounted wedges shall be factory set to provide zero leakage at the design head pressures with factory certified test reports available.

B. Wedges:

1. Factory fixed to provide tight shutoff over an extended life and repeated use of the gate.
2. Stainless steel 316 (same material as the gate) welded into position on the gate at both the top and bottom.
3. Designed with intermediate wedges to eliminate any bowing or gate deflection when seated.

C. Seat:

1. The gate seat shall have a mechanically retained neoprene or hypalon seal around the entire perimeter of the gate opening.
2. The rubber seat to stainless steel combination shall be as specified in AWWA C-504.
3. The seat shall be raised away from the frame to allow a clearance area so that solids and debris can be pushed aside by the gate. The design of the seat shall be

such that solids or debris does not get trapped on the seat and cause a leak path or damage.

4. The resilient seat is mechanically retained with stainless steel fasteners and field replaceable.

D. Wall Thimble:

1. Wall thimble shall be fabricated type 316 stainless steel or sufficient section to resist permanent distortion and shall be provided by the gate manufacturer.
2. Wall thimbles shall be of bent leg design or F-Type and of a depth equal to the thickness of the structure wall upon which the gate is mounted.

E. Stem and Couplings:

1. Operating stem shall be 316 stainless steel designed to transmit in compression at least two times the rated output of the operating manual mechanism with a 40-pound effort on the crank or hand-wheel.
2. The threaded portion of the stem shall have machined cut or rolled threads of the Acme type and shall have a surface finish of 32 microns or less.
3. When hydraulic, pneumatic or electric operators are used, including portable operators, stem design force shall not be less than 1.25 times the output thrust of the hydraulic or pneumatic cylinder with a pressure equal to the maximum working pressure of the supply, or 1.25 times the output thrust of the electric or hydraulic motor in the stalled condition. Sections of stem assemblies of diameter 1-3/4 inches and larger shall be joined together with solid couplings. The couplings shall be grooved and keyed and shall be of greater strength than the stem.
4. Gates having widths equal to or greater than two times the height shall be provided with two lifting mechanisms connected by a tandem shaft.
5. Clear acrylic threaded stem cover with graduated markings to show the position of the gate.

F. Stem Guides:

1. Stem guides shall be fabricated from type 316L stainless steel and ultra high molecular weight polyethylene (UHMWPE) bushed where required by the manufacturer.
2. Guides shall be adjustable in two directions and shall be spaced in accordance with manufacturer's recommendation.
3. Stem guides shall not be located on the threaded portion of the stem.

G. Thrust Nut:

1. For rising stem arrangement, the thrust nut shall be located at the operator level.

5.10 FENCE INSTALLATION

A. Post Setting:

1. All posts shall be core drilled twice the diameter of the actual post and secured in place by high strength cement into the lift station site's concrete slab to a depth of three feet.
2. After the post has been set, aligned and plumbed, the hole shall be filled with 2,500 psi concrete. The concrete shall be thoroughly worked into the hole so as to leave no voids. The exposed surface of the concrete shall be crowned to shed water.
3. End, corner, pull and gate posts shall be braced to the nearest post with horizontal brace used as a compression member and a galvanized 3/8-inch steel truss rod and truss tightener used as a tension member. Corner posts and corner bracing shall be constructed at all changes of fence alignment of 30 degrees or more. All chain link fences shall be constructed with a top rail and bottom tension wire.

B. Placing Fabric:

1. The fabric shall not be placed until the posts have been permanently positioned and concrete foundations have attained adequate strength. The fabric shall be placed by securing one end and applying sufficient tension to remove all slack before making permanent attachments at intermediate points.
2. The fabric shall be fastened to all corner, end and pull posts by substantial and approved means. Tension for stretching the fabric shall be applied by mechanical fence stretchers.

5.11 WET WELL INSTALLATION

A. Bedding:

The wet wellshall be placed on bedding rock conforming to the requirements in the Section entitled "Excavations, Backfill, Compaction, and Grading Specifications". The bedding rock shall be firmly tamped and made smooth and level to assure uniform contact and support of the pre-cast element.

B. Pre-cast Sections:

1. The pre-cast base section shall be carefully placed on the prepared bedding so as to be fully and uniformly supported, in true alignment, and ensure that all pipes entering the structure shall be inserted to the proper grade.
2. Pre-cast sections shall be handled by lift rings or non-penetrating lift holes. Such holes shall be filled with non-shrink grout after installation of the wet well and coated. Lifting of sections shall be as per manufacturer's recommendation.
3. Sections shall be uniformly supported by the base structure, and shall not bear directly on any of the pipes. Influent and effluent pipes shall be properly installed so as to form an integral watertight unit.
4. Sections shall be placed and aligned to provide vertical alignment with a 1/4-inch maximum tolerance per five feet of depth.
5. The completed wet well shall be rigid, true to dimensions, and watertight.

6. Wherever practicable, all wet well excavations shall be dewatered and pre-cast sections installed in the dry.

C. Excavation and Backfilling:

Requirements of the Section entitled “Excavations, Backfill, Compaction, and Grading” Specifications” shall apply.

D. Pipe Connections:

Special care shall be taken to ensure that the openings through which pipes enter the structure are provided with watertight connections. Pipe connections shall conform to ASTM C 923, "Standard Specifications for Resilient Connectors Between Reinforced Concrete Manhole Structures, Pipes and Laterals".

E. Doors:

Wet well frames shall be securely mounted and doors shall open above the pumps. Wet well hinges shall not be mounted on the same side as guide rails and cable rack.

F. Power Cable:

Each pump power cable shall be supported on a separate 3/8-inch Type 316 stainless steel hook located within six inches of guide rail bracket for each pump. Each pump power cable shall be run as not to restrict removal of pumps.

5.12 CLEANING

A. All newly constructed wet wells shall be cleaned of any accumulation of silt, debris, or foreign matter of any kind and shall be free from such accumulations at the time of final inspection.

5.13 SLUICE GATE INSTALLATION AND TESTING

A. The manufacturer shall guarantee the sluice gate, actuator, and appurtenance items for a period of three years covering the equipment and installation from the date of service.

B. After installation, all gates shall be tested for leakage. Each gate shall be operated through one complete cycle and then closed for testing, zero leakage tight shutoff as detailed in the manufacturer’s manual.

5.14 WATER SUPPLY

A. All wastewater lift stations shall be provided with a water system with adequate capacity and pressure for station wash down and other requirements. The water supply shall be supplied with a water meter and equipped with a PCU approved reduced pressure zone (RPZ) principle cross connection control assembly. The RPZ shall be installed and located inside the fenced area as described in the STANDARD DRAWINGS.

5.15 WET WELL FALL PROTECTION SYSTEM

A. A grate based wet well fall protection system shall be furnished and installed by the CONTRACTOR. A system shall be installed when the door(s) is fabricated or field installed on existing door(s). The system shall be installed in accordance with the manufacturer's recommendations.

B. The System shall be:

1. Designed to support a 300 PSF live load.
2. Highly visible in color.
3. Capable of locking in the fully open position.
4. Provided with lift assistance for ease of operation.
5. UV and corrosion resistant.
6. Lockable to prevent unauthorized opening.
7. Supported with a load bearing bar(s) that provide continuous support.
8. Made of aluminum or one piece fiberglass.

C. Lift Assistance: A torsion rod shall be incorporated into the grating panel design to provide lift assistance when opening the grating panel.

D. Hold Open Feature: A hold open arm shall be provided to lock the cover in a fully open 90 degree position. A release handle shall be provided to allow the grating panel to be closed.

E. Hardware: All hardware (mounting brackets, hinges, torsion rod, hold open arm, padlock loop, and fasteners) shall be Type 316 stainless steel.

CHAPTER 5 WASTEWATER

Section 513 Wastewater Pipes, Valves, and Appurtenances Specifications December 2010

PART 1 - GENERAL

1.01 SCOPE OF WORK

A. These specifications cover wastewater pipes, valves, and appurtenances used for the wastewater collection systems and lift stations.

B. The CONTRACTOR shall be responsible for all stored material furnished for the project. The CONTRACTOR shall, if requested by PCU, furnish certificates, affidavits of compliance, test reports or samples for any of the materials specified herein. All materials delivered to project site for installation are subject to random testing for compliance with the designated specifications.

C. Wastewater mains, service lateral piping, and connections shall be installed as indicated in the STANDARD DRAWINGS.

PART 2 - PRODUCTS

2.01 PIPE MATERIALS

A. PVC Gravity Pipe:

1. PVC gravity pipe shall conform to ASTM F679 with a SDR of 26. Uniform minimum "pipe stiffness" at five percent deflection shall be 46 psi. The joints shall be integral bell elastomeric gasket joints manufactured in accordance with ASTM D3212 and ASTM F477. The applicable UNI-Bell Plastic Pipe Association standard is UNI-B-7.

B. PVC Pressure Pipe:

All PVC pipe shall bear the NSF-DW seal. The minimum standard length of pipe shall be 13 feet.

1. All PVC pipe shall be manufactured in accordance with AWWA Standard C900. Pipe that is 4 to 12 inches in diameter shall be C900 and have a dimension ratio of 18. Pipe larger than 12 inches in diameter shall be C905 or C909 and have a dimension ratio of 25. Pipe shall be the same outside diameter as ductile iron pipe.

C. HDPE Pressure Pipe:

Materials used for the manufacture of high-density polyethylene pipe and fittings shall comply with all requirements of ASTM D1248 and Plastic Pipe Institute (PPI) designation PE3408/PE4710. Manufacturer shall be a member in good standing of the Plastic Pipe Institute. HDPE pipe and fittings shall comply or exceed AWWA Standards C901/C906, ASTM D2513, ASTM D3035 and ASTM F714. The manufacturer shall supply a letter of certification stating compliance to all the above standards prior to shipping any material to project site. The HDPE material shall have ultraviolet inhibitors to resist degradation by direct and prolong sunlight. The design of HDPE materials shall be based on the hydrostatic design basis (HDB) of 1,600 psi at 73.4 degrees Fahrenheit. Pipe shall be designed and produced to ductile iron diameters and to a maximum dimension ratio of 11. In the event that HDPE pipe with

42 inch and larger diameters are not available due to general industry limitations, PCU may consider the use of outside diameters based on iron pipe sizes.

D. Ductile Iron Pressure Pipe:

The use of DI pipe for new wastewater applications shall be restricted to onsite use inside the limits of wastewater lift stations and treatment facilities. Unless otherwise stated, all DI pipe and fittings shall comply with the material requirements contained within Section 2.04 (A) below.

2.02 JOINT MATERIALS

A. PVC Gravity Pipe:

PVC gravity pipe joints shall have push on type joints with flexible elastomeric seals per ASTM D 3212.

B. PVC Pressure Pipe:

1. PVC pressure pipe shall have integral bell push on type joints conforming to ASTM D3139.

2. Fusible PVC pressure pipe lengths shall be assembled in the field with butt fused joints. The CONTRACTOR shall follow the pipe supplier's written guidelines for this procedure. All fusion joints shall be completed as specified by the pipe supplier and this MANUAL.

C. HDPE Pressure Pipe:

HDPE joints shall conform to AWWA C906.

D. Restrained Joints:

Restrained joint devices shall be made specifically for PVC pipe and meet or exceed the requirements in ASTM F-1674.

E. Joints for Dissimilar Pipe:

Joining of dissimilar pipe and pipe between lift station wet well shall conform to the Table 513-1 below.

Table 513-1. Joints for Dissimilar Pipe.

Type of Line	Material	Material	Use
Gravity	C-900	SDR-26	PVC Adapter
Force Main	PVC	Ductile Iron	Restrained MJ Sleeve

Force Main	PVC	HDPE	Restrained MJ Sleeve to Fused PVC Adapter
Force Main	PVC	AC	Coupler
Lift Station Wet Well	HDPE	Ductile Iron	Electrofusion and Restrained MJ Sleeve to Fused MJ DIP Adapter
Lift Station Wet Well	Ductile Iron	Ductile Iron	MJ Sleeve

F. Pipe Markings:

Pipes shall have the manufacturer's home-mark on the spigot. On field cut pipe, the CONTRACTOR shall provide home-mark on the spigot in accordance with the manufacturer's recommendations.

2.03 FITTINGS

A. PVC Gravity Pipe**:**

1. Branches:

   Unless otherwise specified, wye branches shall be provided in the gravity main for service lateral connections. Wyes shall be sized in accordance with the STANDARD DRAWINGS. All fittings shall be of the same material as the pipe.

2. Plugs:

   Plugs for stub outs shall be of the same material as the pipe, and gasketed with the same gasket material as the pipe joint, or be of material approved by PCU. The plug shall be secured to withstand specified test pressures.

B. PVC Pressure Pipe:

Fittings shall be restrained mechanical joint compact ductile iron fittings that conform to ANSI/AWWA A21.53/C153. Interior and exterior coatings of ductile iron pipe fittings shall be as specified in the appropriate "Approved Materials Checklist".

C. HDPE Pressure Pipe:

Fittings used with HDPE pipe shall be mechanical joint ductile iron compact fittings in accordance with ANSI/AWWA A21.53/C153 unless otherwise specifically approved by PCU. HDPE fittings in wet well shall be in accordance with section 2.04 below.

2.04 DUCTILE IRON PIPE OR HDPE PIPE AND FITTINGS FOR LIFT STATIONS

A. All lift station pipe and fittings from the pump discharge to the first pipe fitting outside of the lift station wet well shall be either all ductile iron with ductile iron flanges in accordance with AWWA C115 or all HDPE piping and HDPE fittings and flanges in accordance with AWWA C906 and C207. All other lift station piping and fittings shall

be ductile iron with ductile iron flanges.

1. Ductile Iron Pipe:

   Ductile iron pipe of nominal diameter 4 through 64 inches shall conform to ANSI/AWWA A21.51/C151. A minimum of CL 53 pipe shall be supplied for all sizes of pipe unless a higher-class pipe is specifically called out in the PLANS or required by PCU.

2. Fittings:

   Fittings shall be mechanical joint ductile iron compact fittings in accordance with ANSI/AWWA A21.53/C153.

3. Joints:

   Joints shall be flanged conforming to ANSI/AWWA A21.11/C111, unless otherwise called for on the PLANS. Restrained or flanged joints shall be provided where called for on the PLANS. Flanged joints shall conform to AWWA C115.

4. Exterior Coatings:

   Ductile iron pipe and fittings shall be coated as specified in the appropriate "Approved Materials Checklist". Primer and field coats shall be compatible and shall be applied in accordance with the manufacturer's recommendations. Final field coat color shall be green for wastewater.

5. Interior Coatings and Linings:

   Ductile iron pipe and fittings shall have an interior protective coating or lining as specified in the appropriate "Approved Materials Checklist".

6. HDPE Pipe:

   HDPE pipe of nominal diameter 4 through 63 inches shall conform to ANSI/AWWA C906 with dimensions conforming to ANSI/AWWA C110/A21.10. A minimum diameter ratio of DR 11 pipe shall be supplied for all sizes of pipe unless a higher-class pipe is specifically called out in the PLANS or required by PCU. Vertical piping must be supported at a minimum of 8 feet on center. Spacing may be less if recommended by material manufacturer.

7. HDPE Fittings:

   Fittings shall be butt-weld joint HDPE fittings in accordance with ANSI/AWWA C906 and ASTM D3261.

8. HDPE Joints:

   Joints with flanges shall be conforming to ANSI/AWWA C207 and ANSI B16.5, unless otherwise called for on the PLANS. Restrained or flanged joints shall be provided where called for on the PLANS. Flanged joints shall be fabricated to mate with ductile iron fittings in accordance with AWWA C115. All flanged joints shall have a backup ring of materials identified in PLANS, either stainless steel or ductile iron. Dimension of ring shall conform to C906 and ANSI B16.5.

2.05 AUTOMATIC AIR RELEASE VALVES

A. General:

Wastewater force mains shall be equipped with automatic air release or automatic combination air and vacuum release valves, located as shown on the PLANS, and as specified in the Section entitled "Wastewater Force Main Standards. Valves shall be located in above ground enclosures as detailed on the STANDARD DRAWINGS.

B. Valve:

The valve body shall be conical in shape and shall be either fusion bonded epoxy coated steel (inside and out) or stainless steel with a funnel shape lower body to automatically drain sewage back into the system. All internal parts shall be corrosion resistant stainless steel or non-metallic plastic materials.

2.06 VALVES

A. General:

In general, plug valves shall not be installed within a force main system, except at wastewater lift stations. Gate valves shall be placed in a vertical position at all other locations within a force main system.

B. Gate Valves:

Refer to the Section entitled "Potable Water System Standards and Specifications".

C. Plug Valves:

When it is proven by the ENGINEER that it is necessary to install a plug valve within the wastewater transmission system, the following criteria shall apply.

1. Plug valves shall be either eccentric or ballcentric.
2. Plug valves shall be installed complete with operating hand wheels, extension stems, operator, operating nuts or wrenches as required for normal operation.
3. Valves shall have the name of the manufacturer and the size of the valve cast or molded onto the valve body. A permanent plate shall be attached to the valve or operator indicating serial number, order number, accessories, operator model and manufacturer, etc.
4. Eccentric plug valves shall be of the non-lubricated type with 80 percent port areas. The port area for valves 4 to 20 inches shall have a minimum 80 percent nominal pipe diameter. Valves 24 inches and larger shall have a minimum port area of 70 percent of nominal pipe diameter.
5. Minimum pressure rating of valves 4 to 12 inches shall be 175 psi; valves 14 to 72 inches shall be 150 psi. Valve bodies shall be cast iron ASTM A 126, Class B.

Valve ends shall be screwed, flanged or mechanical joint as indicated on the drawings. Plugs shall be cast iron or ductile iron with neoprene facing and shall be of the single piece design. The plug shall be of the same configuration for all valves and shall require no stiffening member opposite the plug for balance or support. Valve body seats shall have a welded in overlay of not less than 90 percent nickel. Packing shall be adjustable and safely replaceable. Brushing shall be Type 316 stainless steel in both upper and lower journals. The valve should be capable of drip tight shut off with flow in either direction at the full pressure of the valve. All exposed nuts, bolts, springs and washers on buried service valves shall be stainless steel.

6. Face to face dimensions shall be in conformance to ASME B16.10 and the following dimensions from Table 513-2 below:

Table 513-2. Lift Station Plug Valve Flange Face to Face Dimensions.

Valve Size (inches)	Face to Face (inches)
4	9.0
6	10.5
8	11.5
12	14.0
16	17.75
20	23.5
24	42.0

D. Valve Testing:

Plug valves shall be tested in accordance with AWWA C504. Each valve shall meet the performance, leakage, and hydrostatic tests described in AWWA C504. The leakage test shall be applied to the face of the plug tending to unseat the valve. The manufacturer shall furnish certified copies of reports covering proof of design testing as described in AWWA C504.

E. Actuators:

Manual valves shall have lever or gear actuators and tee wrenches, extension stems, floor stands, etc. as indicated on the PLANS. All valves 6-inch and larger shall be equipped with gear actuators. All gearing shall be enclosed in a semi-steel housing and be suitable for running in a lubricant with seals provided on all shafts to prevent entry of dirt and water into the actuator. All actuator shafts shall be supported on permanently lubricated bronze bearings. Actuators shall clearly indicate valve position and an adjustable stop shall be provided to set closing torque. All exposed nuts, bolts and washers shall be zinc or cadmium plated. Valve packing adjustment

shall be accessible without disassembly of the actuator.

2.07 VALVE BOXES

A. Standard Three-Piece Cast Iron Valve Box:

Three-piece valve boxes are required for mains less than six feet below finished grade as indicated in the STANDARD DRAWINGS. Valve boxes shall be provided with suitable heavy duty ductile or cast iron bonnets and shall extend to such elevation at or slightly above the finished grade surface as directed by PCU. The barrel shall be screw type only and have a 5-1/4-inch shaft. The upper section shall have a flange at the bottom having sufficient bearing area to prevent settling and shall be complete with cast iron covers. Covers shall have "SEWER" cast into the top for all mains.

B. Valve Box Assembly:

Valve box assemblies, as indicated in the STANDARD DRAWINGS, are required for any size main whenever the top of the valve nut is six feet or deeper below the finished surface elevation that is directly above the valve location. Valve boxes shall be one complete assembled unit composed of the ductile or cast iron valve box with a 5-1/4 inch barrel shaft and steel extension stem that attaches to the valve body. All moving parts of the extension stem shall be enclosed in a housing to prevent contact with the soil. Valve box assembly shall be adjustable to accommodate variable depths.

C. The stem assembly shall be of a telescoping design that allows for variable adjustment length. The material shall be galvanized square steel tubing. The stem assembly shall have a built-in device that prevents the stem assembly from disengaging at its fully extended length. The extension stem must be capable of surviving a torque test to 1,000 ft-lb without failure.

D. Valve boxes, located in roadways with speed limits above 30 miles per hour or on mains that are 16 inches in diameter or larger, shall have locking lids utilizing a five sided nut with a special wrench needed to open. Valve lids to be made as shown in the STANDARD DRAWINGS.

E. A test station box shall be installed into the valve pad for the placement of the locating wire as shown in the STANDARD DRAWINGS. The test station box shall be as specified in the appropriate "Approved Materials Checklist".

F. Locating wire shall be 14-gauge single strand solid core copper wire with insulation. The color of the insulation shall be the same color as the color code for the pipe being installed.

G. Each valve marker shall be made of bronze with each specific valve's information clearly imprinted on its top surface, provided with a hanger pin, and installed in each valve collar as shown in the STANDARD DRAWINGS.

2.08 PRESSURE GAUGES

A. Pressure gauges shall be installed on each lift station discharge pipe as indicated on the

STANDARD DRAWINGS. Each pressure gauge shall be direct mounted, diaphragm (type) gauge, stainless steel case, stainless steel sensing element, liquid (oil) filled, with a 4-1/2-inch diameter dial, and furnished with a clear glass crystal window, 1/4-inch shut-off (isolation) valve. Gauges shall be weatherproofed. The face dial shall be white finished aluminum with jet-black graduations and figures. The face dial shall indicate the units of pressure measured in psi, with a zero to 150 psi range.

PART 3 - CONSTRUCTION

3.01 MATERIAL IDENTIFICATION AND TESTING

A. Pipe Identification and Location:

1. Each length of pipe shall bear the name or trademark of the manufacturer, the location of the manufacturing plant and the class or strength classification of the pipe. The markings shall be plainly visible on the pipe barrel. Pipe, which is not clearly marked, is subject to rejection. The CONTRACTOR shall remove all rejected pipe from the project site within five NORMAL WORKING DAYS.
2. All PVC pipe and other pipe that is factory color-coded on the outside surface of the pipe shall be identified and locatable as specified in the STANDARD DRAWINGS. All Ductile Iron Pipe, and other pipe not factory color-coded on the outside surface of the pipe, shall be identified and locatable as specified in the STANDARD DRAWINGS. Where the above type of identification method is not considered to be practical by PCU, the pipe shall have a field applied three inch wide permanent blue paint stripe down the top outside center of the pipe along its entire length.

B. Material Testing Requirements:

1. If requested by PCU, a sample of pipe to be tested shall be selected at random by PCU or the testing laboratory hired by PCU.
2. When the samples tested conform to applicable standards, all pipe represented by such samples shall be considered acceptable based on the test parameters measured. Copies of test reports shall be available before the pipe is installed on the project.
3. In the event that any of the test samples fail to meet the applicable standards, all pipe represented by such tests shall be subjected to rejection. The CONTRACTOR may furnish two additional test samples from the same shipment or delivery, for each sample that failed and the pipe will be considered acceptable if all of these additional samples meet the requirements of the applicable standards. All such retesting shall be at the CONTRACTOR's expense.
4. Pipe that has been rejected by PCU shall be removed from the site of the work by the CONTRACTOR and replaced with pipe that meets these specifications.

3.02 SEPARATION OF MAINS

A. Separation of all mains shall be in accordance with the STANDARD DRAWINGS.

3.03 INSTALLATION OF VALVES

A. All valves shall be inspected upon delivery in the field to insure proper working order before installation. They shall be set and jointed to the pipe in the manner as set forth in the AWWA Standards for the type of connection ends furnished. All valves and appurtenances shall be installed true to alignment and rigidly supported. Any damage to the above items shall be repaired to the satisfaction of PCU before they are installed.

3.04 NOTIFICATION OF CONNECTION TO EXISTING MAINS

A. PCU shall be notified at least five NORMAL WORKING DAYS in advance to schedule main connections and valve operations. All existing valves are to be operated only by PCU. All valves installed are to remain closed during construction.

The CONTRACTOR shall exercise extreme caution when excavating in proximity of PCU mains. PCU main locations shown on plans are not exact or guaranteed. The CONTRACTOR is responsible for field verifying existing utility locations. PCU dispatch operator shall be notified immediately in the event of a force main, water main, or reclaimed water main break or damage. The CONTRACTOR shall immediately repair all damage to PCU mains, at the CONTRACTOR's expense. If the repair is not made in a timely manner, as determined by the PCU Inspector, PCU may perform repairs and the CONTRACTOR will be charged for repairs.

CHAPTER 5 WASTEWATER

Section 514 Wastewater System Bypass Specifications December 2010

PART 1 - GENERAL

1.01 SCOPE OF WORK

A. The WORK covered by this Section consists of providing all temporary bypassing to perform all operations in connection with the flow of wastewater around pipe segment(s) or lift stations. The purpose of bypassing is to prevent wastewater overflows and provide continuous service to all wastewater customers. The CONTRACTOR shall maintain wastewater flow in the construction area in order to prevent backup and/or overflow and provide reliable wastewater service to the users of the wastewater system at all times.

B. When not a low flow scenario or the bypass origination and discharge points are not adjacent to each other, the pipe utilized during the WORK shall be restrained joint DI pipe, restrained joint PVC pipe, fusible PVC pipe with butt welded joints, or HDPE pipe with butt welded joints. Lay flat rolled types hoses may be used when there is a low flow scenario and the bypass origination and discharge points are adjacent to each other. All pipes shall be sufficiently supported in order to restrict horizontal or vertical movement.

PART 2 - PRODUCTS

2.01 GENERAL

A. The CONTRACTOR shall provide and maintain adequate equipment, piping, tankers and other necessary appurtenances in order to maintain continuous and reliable wastewater service in all wastewater lines as required for construction. The CONTRACTOR shall have tankers, backup pump(s), piping and appurtenances ready to deploy immediately.

PART 3 - EXECUTION

3.01 GENERAL

A. The CONTRACTOR shall have all materials, equipment and labor necessary to complete the repair, replacement or rehabilitation on the job site prior to isolating the gravity main segment, manhole, or lift station. The CONTRACTOR shall demonstrate that the pumping system is in good working order and is sufficiently sized to successfully handle flows by performing a test run for a period of 24 hours prior to beginning the WORK.

3.02 TRAFFIC CONSIDERATIONS

A. The CONTRACTOR shall locate bypass pumping suction and discharge lines so as to not cause undue interference with the use of streets, private driveways and alleys to include the possible temporary trenching of piping at critical intersections. Ingress and egress to adjacent properties shall be maintained at all times. Ramps, steel plates or others methods shall be deployed by the CONTRACTOR to facilitate traffic over surface piping. High traffic commercial properties may require alternate methods.

3.03 BYPASS PLAN

A. The CONTRACTOR shall submit a sufficiently detailed drawing or comprehensive written plan to PCU for approval and acceptance that describes the intended bypass for the maintenance of flows during construction. The CONTRACTOR shall also provide a sketch with the written plan showing the location of bypass pumping equipment for each lift station or line segment(s) around which flows are being bypassed. The plan shall include any proposed tanker(s), pump(s), bypass piping, backup plan, and equipment, work schedule, monitoring log for bypass pumping, monitoring plan of the bypass pumping operation and maintenance of traffic plan. The CONTRACTOR shall cease bypass operations and return flows to the new and/or existing sewer when directed by PCU. All bypass piping shall be designed to withstand at least twice the maximum system pressure or a minimum of 50 psi, whichever is greater. During bypassing, no wastewater shall be leaked, dumped, or spilled in or onto, any area outside of the existing wastewater system. When bypass operations are complete, all bypass piping shall be drained into the wastewater system prior to disassembly.

3.04 BYPASS OPERATION

A. PCU must approve of and accept the bypass plan for planned bypasses prior to implementation of the bypass. The CONTRACTOR shall plug off and pump down the sewer manhole or line segment in the immediate WORK area and shall maintain the wastewater system so that surcharging does not occur. Emergency bypasses shall be as directed by PCU.

B. Where WORK requires the line to be blocked beyond NORMAL WORKING HOURS and bypass pumping is being utilized, the CONTRACTOR shall be responsible for monitoring the bypass operation 24 hours per day, 7 days per week. If accepted in the bypass plan by PCU, any electronic monitoring in lieu of on-site monitoring must be detailed in the written plan and approved by PCU.

C. The CONTRACTOR shall ensure that no damage will be caused to private property as a result of bypass pumping operations. The CONTRACTOR shall complete the WORK as quickly as possible and satisfactorily pass all tests, inspections and repair all deficiencies prior to discontinuing bypassing operations and returning flow to the sewer manhole or line segment.

D. The CONTRACTOR shall immediately notify PCU should a sanitary sewer overflow occur and take the necessary action to clean up and disinfect the spillage to the satisfaction of PCU and/or other governmental agency. If sewage is spilled onto public or private property, the CONTRACTOR shall wash down, clean up and disinfect the spillage to the satisfaction of PCU and/or other governmental agency. When bypassing a lift station, one back-up pump equal to the primary unit shall be required. Bypass pumps shall have a maximum rating of 65 decibels for sound attenuation next to residential developments, 70 decibels next to commercial

businesses, and 80 decibels next to industrial areas or in accordance with the LAND DEVELOPMENT CODE.

3.05 CONTRACTOR LIABILITY

A. The CONTRACTOR shall be responsible for all required pumping, equipment, piping and appurtenances to accomplish the bypass and for any and all damage that results directly or indirectly from the bypass pumping equipment, piping and/or appurtenances. The CONTRACTOR shall also be liable for all COUNTY personnel and equipment costs, penalties, and fines resulting from sanitary sewer overflows. It is the intent of these specifications to require the CONTRACTOR to establish adequate bypass pumping as required regardless of the flow condition.

CHAPTER 5 WASTEWATER

Section 515 Submersible Wastewater Pumps Specifications December 2010

PART 1 - GENERAL

1.01 SCOPE OF WORK

A. The specifications within this Section are for equipment that is intended to be standard pumping equipment of proven ability as manufactured by a reputable firm having at least five years experience in the production of such equipment. The equipment furnished shall be designed, constructed and installed in accordance with the best practices and methods and shall operate satisfactorily when installed as shown on the PLANS.

B. All parts shall be so designed and proportioned as to have liberal strength and stiffness and to be especially adapted for the WORK to be done. Ample space shall be provided for inspection, repairs and adjustment. All necessary foundation bolts, plates, nuts, and washers shall be furnished by the equipment manufacturer and shall be of Type 316 stainless steel. Brass or stainless steel nameplates identifying the name of the manufacturer, voltage, phase, rated horsepower, speed and any other pertinent data shall be attached to each pump. The nameplate rating of the motors shall not be exceeded.

C. The pumps shall be capable of handling raw unscreened domestic wastewater and minimum 3-inch diameter solid spheres. Pumps shall be mounted in the wet well as shown in the STANDARD DRAWINGS. Refer to the appropriate "Approved Materials Checklist".

1.03 QUALITY ASSURANCE

A. Warranty/Service Center shall be located in Orange, Lake, Hillsborough, Polk, or Osceola Counties and service response shall be within two hours during NORMAL WORKING HOURS, and provide emergency service 24 hours, 7 days a week.

B. Vendor shall have an exchange program in place with ability to exchange out-of-service pumps that require shop work for pump in vendor stock until repairs are complete or serviceable pump is available.

PART 2 - PRODUCTS

2.01 PUMP CONSTRUCTION DETAILS

A. Shaft:

The pump shaft shall be of Series 300 or 400 stainless steel or carbon steel. When a carbon steel shaft is provided, the manufacturer shall demonstrate that any part of the shaft which will normally come in contact with the wastewater has proven to be corrosion resistant in this application. The shaft and bearings shall be adequately designed to meet the maximum torque required for any start-up or operating condition and to minimize vibration and shaft deflection. As a minimum, the pump shaft shall rotate on two permanently lubricated bearings. The upper bearing shall be a single row ball bearing. The lower bearing shall be a two row angular contact ball bearing, if required to minimize vibration and provide maximum bearing life. Bearings shall be

designed to provide a minimum life of 50,000 hours.

B. Impeller:

The impeller shall be constructed of bronze or gray cast iron, ASTM A-48, class 30. All external bolts and nuts shall be of Type 316 stainless steel. Each pump shall be provided with a replaceable metallic wear ring system to maintain pump efficiency. As a minimum one stationary wear ring provided in the pump volute and one rotating wear ring provided on the pump impeller shall be required. A two-part system is acceptable. The closed type can be single or double vaned. The open type shall be single vane with a self-cleaning, adjustable cast iron wear plate. All impellers shall be non-clogging and dynamically balanced.

C. Mechanical Seal:

Each pump shall be provided with a tandem double mechanical seal or dual mechanical seals running in an oil reservoir, composed of two separate lapped face seals, each consisting of one stationary and one rotating tungsten carbide ring with each pair held in contact by a separate spring, so that the outside pressure assists spring compression in preventing the seal faces from opening. The compression spring shall be protected against exposure to the pumped liquid. Silicone carbide may be used in place of tungsten carbide for the lower seal. The pumped liquid shall be sealed from the oil reservoir by one face seal and the oil reservoir from the air-filled motor chamber by the other. The seals shall require neither maintenance nor adjustment, and shall be easily replaced. Seal shall be held in place by locking ring. Conventional double mechanical seals with a single spring between the rotating faces, requiring constant differential pressure to effect sealing and subject to openings and penetration by pumping forces, shall not be considered equal to tandem seal specified and required. Cartridge seal shall be acceptable.

D. Guides:

A sliding guide bracket shall be an integral part of the pump casing and shall have a machined connecting flange to connect with the cast iron discharge connection (pump base elbow), which shall be bolted to the floor of the wet well with stainless steel anchor bolts and so designed as to receive the pump discharge flange without the need of any bolts or nuts. The pump base elbow design shall be interchangeable such that it will provide a watertight connection for any of the specified or otherwise accepted pumps without requiring any special tools, gaskets or adapters. Sealing of the pumps to the discharge connection shall be accomplished by a simple linear downward motion of the pump with the entire weight of the pumping unit guided by two Type 316 seamless tubular stainless steel guides which will press it tightly against the discharge connection. No brackets for guide rail system will be mounted to discharge piping. No portion of the pump shall bear directly on the floor of the wet well and no rotary motion of the pump shall be required for sealing. Sealing at the discharge connection by means of a diaphragm or similar method of sealing will not be accepted as an equal to a metal to metal contact of the pump discharge and mating discharge connection specified and required. Approved pump manufacturers, if necessary to meet the above specification,

shall provide a sliding guide bracket adapter. No reducing brackets or adapters shall be placed on or between the base elbow seating surface and pump volute. The design shall be such that the pumps shall be automatically connected to the discharge piping when lowered into place on the discharge connection. The pumps shall be easily removable for inspection or service, requiring no bolts, nuts or fastenings to be removed for this purpose and no need for personnel to enter the wet well.

2.02 MOTORS

A. General Requirements:

All motors shall be built in accordance with latest NEMA, IEEE, ANSI and AFBMA standards where applicable. Pump motors shall be housed in an air-filled, watertight casing and shall have Class F insulated windings which shall be moisture resistant. Motors shall be NEMA Design B, rated 155 degrees C maximum. Pump motors shall have cooling characteristics suitable to permit continuous operation, in a totally, partially or non-submerged condition. The pump shall be capable of running continuously in a non-submerged condition under full load without damage, for extended periods. The motor shall be capable of a minimum of 10 starts per hour. A field running test demonstrating this ability, with 24 hours of continuous operation under the above conditions, shall be performed for all pumps being supplied before final acceptance, as required by PCU. Pump motors shall be non-overloading over entire pump range.

1) Motors 25 horsepower and below shall be rated 230/460-volt, 3-phase.

2) Motors greater than 25 horsepower shall be rated 460-volt, 3-phase.

B. Heat and Moisture Sensors:

Each motor shall incorporate a minimum of one ambient temperature compensated overheat sensing device and one moisture sensing device. These protective devices shall be wired into the pump controls in such a way that if excessive temperature is detected the pump will shut down. If moisture is detected, a fault will be sent to SCADA and activate a seal failure alarm light on the dead front door without affecting pump operation. These devices shall be self-resetting.

C. Cables:

Cables shall be designed specifically for submersible pump applications and shall be properly sealed. A type CGB watertight connector with a neoprene gland shall be furnished with each pump to seal the cable entry at the top of the pump. The pump cable entry seal design shall preclude specific torque requirements to insure a watertight and submersible seal. The cable entry shall be comprised of a single cylindrical elastomer grommet, flanked by washers and/or a compression gland, all having a close tolerance fit against the cable outside diameter and the entry inside diameter and compressed by the entry body containing a strain relief function, separate from the function of sealing the cable. The assembly shall bear against a shoulder in the pump top. The cable entry

junction chamber and motor shall be separated by a stator lead sealing gland, epoxy barrier, or terminal board, which shall isolate the motor interior from foreign material gaining access through the pump top. Secondary sealing systems utilizing epoxy potting compounds may be used. The manufacturers shall supply a cable cap as part of the spare parts for each pump when this type of sealing system is used. All cables shall be continuous, without splices from the motor to the control panel, junction box terminal strip, unless otherwise approved by PCU. The junction chamber, containing the terminal board, shall be perfectly leak proof.

2.03 PUMP CONTROL SYSTEM

A. Refer to the Section entitled "Wastewater Lift Station Electrical and Control System Specifications".

PART 3 - EXECUTION

3.01 SHOP PAINTING

A. Before exposure to weather and prior to shop painting, all surfaces shall be thoroughly cleaned, dry and free from all mill-scale, rust, grease, dirt and other foreign matter. All pumps and motors shall be shop coated with a corrosion resistant paint proven to withstand an environment of raw wastewater. All nameplates shall be properly protected during painting.

B. Gears, bearing surfaces, and other similar surfaces obviously not to be painted shall be given a heavy shop coat of grease or other suitable rust-resistant coating. This coating shall be maintained as necessary to prevent corrosion during periods of storage and erection and shall be satisfactory to PCU up to the time of the final acceptance test.

3.02 HANDLING

A. All parts and equipment shall be properly protected so that no damage or deterioration will occur during a prolonged delay from the time of shipment until installation is completed and the units and equipment are ready for operation. Finished surfaces of all exposed pump openings shall be protected by wooded planks, strongly built and securely bolted thereto. Finished iron or steel surfaces not painted shall be properly protected to prevent rust and corrosion.

3.03 WARRANTY

A. The pump manufacturer shall warrant the units being supplied to PCU against defects in workmanship and material for a period of five years from installation or 10,000 hours from installation, whichever comes first.

3.04 TOOLS AND SPARE PARTS

A. No tools or spare parts shall be required.

CHAPTER 5 WASTEWATER Re-written September 2014

Section 516 Wastewater Lift Station Electrical System Specifications December 2010

PART 1 - GENERAL

1.01 SCOPE OF WORK

A. This Section specifies the electrical system requirements for wastewater lift stations. These requirements apply to standard lift stations and also include general requirements applying to stations with Variable Frequency Drives (VFDs) and Motor Control Centers (MCCs). Provide all work necessary for a complete and operational lift station installation.

B. All work shall be performed in accordance with the current revision of the National Fire Protection Association (NFPA) 70, National Electrical Code (NEC) and OSHA regulations and guidelines. Provide equipment labeled or listed by a nationally recognized testing laboratory or other organization as a basis for approval under the NEC.

C. Pump Operation shall be controlled automatically by means of hydrostatic pressure transducer level sensors with a float ball backup system for pump control and level alarms. VFD pump operation shall be PID-controlled to maintain a level set point in the wet well. VFD driven pumps shall start and stop based on specific level set points.

D. Lift station control panel(s) shall be provided for each wastewater lift station. Refer to Section 517, SCADA and Control Panel Specifications for requirements related to lift station control and monitoring and control panel construction and materials.

PART 2 - PRODUCTS

2.01 GENERAL

A. Provide products and materials as specified in the appropriate "Approved Materials Checklist" and as specified herein. Provide products of the same or similar type of one manufacturer in order to achieve standardization.

B. Equipment and devices installed outdoors shall be capable of continuous operation within a minimum ambient temperature range of minus 22 degrees F to 144 degrees F unless noted otherwise.

C. Provide manufacturer's standard finish except where specific color or finish is indicated.

2.02 POWER SUPPLY AND MAIN DISCONNECT

A. Coordinate installation of all new and modified power services with the local utility and obtain all required permits.

B. Power supply to the control panel shall be 240-volt, 3-phase, 4-wire (Delta) or 480-volt, 3-phase, 4-wire (Wye). Service shall be designed for the station full load amperes including the loading of any planned future equipment plus a minimum 50% spare capacity. Single-phase power is not permitted.

C. The power supply cables to the control panel from the off-site source shall be installed underground within a minimum 3-inch diameter schedule 80 PVC electrical conduit and in accordance with the NEC.

D. For systems having a permanently mounted standby generator, refer to Section 516 Part 2.07 "Standby Power Generator System" for generator and transfer switch requirements.

E. Systems requiring a portable generator connection shall meet the following requirements:

1. Coordinate requirements with control panel supplier to ensure the appropriate transfer mechanisms, breakers, and generator receptacle are provided based on the selection of service entrance equipment.

2. Provide a breaker based UL1008 listed and service entrance rated transfer switch with generator cam-lock connectors to be used as the service entrance equipment and terminate utility feed to this device. Refer to Manual Transfer Switch (MTS) specification for requirements.

3. At the option of the Contractor, a generator receptacle with appropriately interlocked breakers in the control panel and externally mounted breaker-based service entrance rated disconnect switch may be used in lieu of the above transfer switch. A separately mounted service entrance rated breaker type main disconnect shall be provided to terminate utility power outside of the control panel. The service entrance rated breaker type disconnect shall be rated for 100A minimum and be of NEMA 4X construction. A main circuit breaker and generator breaker with mechanical interlock and generator receptacle shall be installed in the control panel for manual switching between utility and generator power. Coordinate all requirements with the control panel supplier.

F. Manual Transfer Switch:

1. Provide service entrance rated UL 1008 listed manual transfer switch for lift stations requiring portable generator systems.

2. Transfer switch shall be molded case breaker-based with safety interlocked door and interior dead-front panel construction. Transfer switch enclosure shall be NEMA 3R 304 Stainless Steel construction powder coated white.

3. Switches shall be 240V or 480V AC 3-phase, 4-wire based on available site voltage and rated for a minimum of 100A. Provide with color coded cam-lock style connectors as required for the site specific amperage having a minimum 400A rating.

4. Provide local indication of utility power available and utility power status dry contact for connection to the control panel.

5. Manufacturer: ESL Power Systems Stormswitch or approved equal.

G. On all 480-volt systems, an additional UL listed, NEMA 3R, lockable, non-fused,

safety type switch utility service disconnect shall be installed ahead of the utility meter in accordance with local utility requirements. The disconnect shall be rated for the maximum available fault current from the utility serving the lift station.

H. Provide 3-phase surge suppression on the downstream side of the transfer switch to provide surge protection on both utility and generator power. A Surge Protective Device (SPD) shall be included and wired to protect motors and control equipment from induced line surges. All SPD's shall be UL listed and installed in accordance with the respective power company requirements and manufacturer's specifications. SPD's shall be attached to the load side of the main transfer switch and mounted in a separate NEMA 4X enclosure directly attached to the transfer switch enclosure. Where a manual transfer switch is not supplied, SPD's shall be installed downstream of the control panel main and generator breakers and mounted external to the control panel. SPD's shall meet the following minimum requirements:

1. The SPD unit shall be UL listed and labeled as per UL 1449 latest edition and have a UL 1283 listing for active sine wave tracking.
2. The unit shall meet "Testing Requirements" of IEEE 62.41 and 62.45.
3. Minimum 10-year replacement warranty.
4. Provide with Disconnect Only option.
5. Provide status indicator lights and contact relay output indicating suppressor fault.
6. Manufacturer:
    i. Eaton, SPD series.
    ii. Eaton/Innovative Technology Protector, PTE series.
    iii. Approved Equal.

2.03 BOXES

A. Outlet and Device Boxes:

1. General: Outlet and device boxes shall be cast aluminum with a powder coat finish and threaded outlets. The boxes shall be gasketed, weatherproof, and UL listed for wet locations. Provide with matching gasketed weatherproof covers selected for the appropriate application.
2. All receptacles and switches shall be industrial grade as manufactured by Eaton/Cooper, Hubbell, or Leviton.
3. For wet location receptacles, provide die-cast powder coated aluminum impact-resistant, single-gang outlet cover with a NEMA 3R rating while in-use.
4. For wet location switches, provide gasketed powder coated aluminum covers with hinge.
5. Manufacturers (boxes):
    i. Crouse-Hinds, Cast Aluminum Weatherproof FS/FD Boxes.

ii. Thomas and Betts, Cast Aluminum Weatherproof FS/FD Boxes.

iii. Appleton, Cast Aluminum Weatherproof FS/FD Boxes.

B. Terminal Junction Boxes (Hazardous Locations):

1. Terminal junction boxes for hazardous locations shall be provided for all junction boxes having a direct connection to the lift station wet well where there is not an appropriate listed conduit seal-off or air gap in between.

2. Provide an ATEX or equivalently approved Type Ex e Class I Zone 1 terminal junction box having UL Listed NEMA 4X Type 304 stainless steel construction for termination of wet well power and control wiring. Power and control wiring shall be separated by a minimum of 12-inches. Separate power and control wiring junction boxes may be provided. The box shall be provided with corrosion resistant terminal strips to accommodate instrumentation and power conductors from the wet well. Seal conduits entering the junction box from the wet well with duct seal, or equivalent, and provide a minimum Class I Division 2 poured conduit seal between the junction box and control panel.

3. Junction Box: Hoffman Zonex ATEX certified Type 4X, or approved equal.

4. Terminal Block: Eaton XB series, Phoenix Contact UT series, or approved equal Ex e labeled corrosion resistant screw type terminal block.

C. Terminal Junction Boxes (Non-Hazardous Locations):

1. General: Provide terminal junction boxes as required.

2. Terminal junction boxes shall be NEMA 4X Type 304 Stainless Steel with hinged cover and white enamel painted interior mounting panel.

3. Manufacturers:

i. Hoffman.

ii. Rittal.

iii. Schaefer.

D. Concrete electrical box:

1. General: Provide concrete electrical boxes as required for underground electrical circuits.

2. Concrete electrical boxes shall be sized as required, have H/20 loading capacity and shall be reinforced concrete with extension and open bottom with openings in each end for conduit entry. Covers shall be galvanized steel diamond plate with integral handle with appropriate label/marking and locking bolts.

3. Manufacturer: Oldcastle/Christy B series or approved equal.

2.04 CONDUIT AND FITTINGS

A. Rigid Aluminum Conduit:

1. Provide rigid aluminum conduit above grade and where conduit sealing fittings are used. Provide aluminum sealing fittings to prevent galvanic corrosion and seizing of threaded connections. Use with stainless steel Myers hub for connections to enclosures. Provide PVC-coated conduit or coat aluminum with bitumastic where in contact with concrete.

2. Rigid aluminum conduit shall meet requirements of NEMA C80.5 and UL6A and be of Type 6063 copper-free aluminum alloy.

B. PVC Schedule 80 Conduit:

1. Provide PVC Schedule 80 conduit below grade. PVC conduit may be extended from below to above grade where conduit sealing fittings are not required such as from the wet well to the terminal junction box.

2. PVC Schedule 80 conduit shall meet the requirements of NEMA TC-2 and UL 651 and shall be furnished without factory formed bell.

C. Flexible Metal Liquid-tight Conduit:

1. Provide flexible metal liquid-tight conduit where necessary to provide flexible connections for instrument and equipment connections.

2. Flexible metal liquid-tight conduit shall meet the requirements of UL 360 and be constructed of galvanized steel with an extruded PVC jacket.

D. Fittings:

1. Rigid aluminum fittings shall meet the requirement of UL 514B and be of copper-free construction.

2. PVC fittings shall meet the requirements of NEMA TC-3.

3. Manufacturers:

   i. Crouse-Hinds.

   ii. Thomas and Betts.

   iii. OZ-Gedney.

2.05 ALARM LIGHT, HIGH LEVEL

A. A vapor proof and vandal proof screw-on type red alarm light shall be mounted on top of a separate 1½ inch minimum diameter Schedule 40 aluminum riser pole located behind and connected to the bottom of the panel by a 1½ inch minimum diameter water tight flexible electrical conduit. The riser pole shall be secured to the horizontal cross member struts, not the panel, with the bottom of the light being no less than 12 inches but not more than 18 inches above the top of the enclosure.

B. Alarm Light Specification:

1. Type: Rotating reflector or flashing bulb.
2. Dome: Polycarbonate.
3. Color: Red.
4. Enclosure: NEMA 4X with ½-inch threaded pipe fitting.
5. UL Listed.
6. Power: 24Vdc.
7. Manufacturer:
    a. Federal Signal, 225XST.
    b. Edwards Signaling.
    c. Approved equal.

2.06 ELECTRICAL EQUIPMENT RACK

A. The main support beams shall be minimum 6-inch structural aluminum I-Beams or H-Beams with a minimum web thickness of 0.210 inches. Two coats of bitumastic coating shall be applied where aluminum will be in contact with concrete or the ground.

B. Horizontal cross member struts shall be 12-gauge stainless steel U-channels with a minimum nominal dimension of 1-1/2" inch by 1-inch. The ENGINEER shall review the structure's wind loading requirements and make any size increases to the main support posts as needed. All other electrical equipment support brackets and hardware shall be 316-stainless steel. Hardware shall include, as a minimum, brackets, nuts, bolts, washers, toggle bolts, clamps, straps, etc.

C. An outdoor rated weatherproof GFCI receptacle, UL listed for wet locations, shall be mounted on the electrical equipment rack with NEMA 3R while-in-use aluminum cover. The receptacle shall be fed from a dedicated circuit.

2.07 STANDBY POWER GENERATOR SYSTEM

A. General:

1. A stationary standby power generator system including the diesel engine generator and automatic transfer switch shall be installed at lift stations, as required by Section 512 entitled "Wastewater Lift Station Standards and Specifications".
2. The generator shall be sized to carry the full lift station load with all pumps operating. Operating voltage shall match of the lift station utility source.
3. Generator configuration shall be diesel engine in a weatherproof sound attenuated enclosure with a diesel fuel tank(s) and separately mounted automatic transfer switch.

4. Manufacturers:
    i. Caterpillar
    ii. Cummins
    iii. Kohler

B. Generator Set:

1. Generator Set shall be a UL 2200 listed package.

2. The generator set shall consist of a diesel engine directly coupled to an electric generator, together with the necessary controls and accessories to provide continuous electric power to the lift station for a minimum duration of 48-hour failure of the normal power supply. The main fuel tank shall have at least 133 percent of the amount of fuel required for the class rating (Class 48), as defined in NFPA 110. The generator set shall be sized to operate continually for the minimum run time of 48 hours under a full load condition.

3. A complete engine generator system shall be furnished and installed with fuel transfer pump, fuel tank, day tank with rupture basin (where required), battery, battery charger, muffler, radiator, control panel, remotely mounted automatic transfer switch, and all other accessories required for an operational system. All materials and parts of the generator set shall be new and unused. Each component shall be of current manufacture from a firm regularly engaged in the production of such equipment. The set shall be of a standard model in regular production at the manufacturer's place of business.

C. Requirements:

1. The emergency generator set and accessories shall be of a type that complies with the latest edition of the NEC and all applicable state and local building codes.

2. The material and workmanship used in the manufacture of this equipment shall be of the highest quality consistent with the current standards for like equipment, and the equipment shall be manufactured in such a manner so as to conform to the latest applicable IEEE, ANSI, ISA, and NEMA standards.

D. Engine:

1. The engine shall be water-cooled, four-stroke cycle, compression ignition diesel. The engine shall be equipped with a fuel filter with a replaceable spin-on canister, lube oil and intake air filters, lube oil and fuel coolers, a fuel transfer pump, fuel priming pump, and a jacket water cooling system consisting of jacket water pump, fan assembly, fan guard, and duct flange outlet.

2. The engine and generator shall be torsionally compatible to prevent damage to either engine or generator. An engine instrument panel shall be installed on the generator set in an approved location. The panel shall include oil and fuel pressure and water temperature gauges. A mechanically driven engine hour meter shall also be provided.

3. The engine governor shall be of the isochronous electronic type. Frequency regulation shall not exceed plus/minus 0.25 percent under steady state conditions. The engine shall start and assume its rated load within 10 seconds, including transfer time.

E. Generator:

1. The generator shall be a three-phase, 60-hertz, single bearing, synchronous type, built to NEMA Standards. Epoxy impregnated Class F insulation shall be used on the stator and the rotor.

2. The excitation system shall employ a generator-mounted volt per hertz type regulator. Voltage regulation shall be plus/minus two percent from no load to full load. Readily accessible voltage drop, voltage level and voltage gain controls shall be provided. Voltage level adjustment shall be a minimum of plus/minus five percent.

F. Engine Generator Control Panel:

Control panel shall be mounted inside generator enclosure. Panel shall contain, but not be limited to, the following equipment:

1. Control Equipment:

Control equipment shall consist of all necessary exciter control equipment, generator voltage regulators, voltage-adjusting rheostat, and speed control equipment and automatic starting controls, as required to satisfactorily control the engine/generator set. In addition an automatic safety shut down shall be provided for low oil pressure and/or high temperature conditions in the engine. An emergency shut down lever switch shall be provided on the air intake. Provide the following I/O for interface with the control panel PLC:

a) System Not in Auto.
b) Engine ON.
c) Engine Fault.
d) Engine Control Panel Fault.
e) Low Battery.
f) Low-Oil Pressure.
g) Low-Coolant Temperature.
h) High-Coolant Temperature.
i) Over Crank Fault.
j) Over Speed.

2. Metering Equipment:

Metering equipment shall include 3-1/2-inch meters (dial or digital type frequency meter, two percent accuracy voltmeter, and ammeter and ammeter-voltmeter phase selector switch). The control panel shall also include the engine water temperature, lube oil pressure and hour meter.

3. Fault Indicators:

   Individual press-to-test fault indicator lights for low oil pressure, high water temperature, low water level, over speed, and over crank shall be provided.

4. Function Switch:

   A four-position function switch marked "Auto", "Manual", "Off/Reset", and "Stop" shall be provided.

G. Battery Charger:

The battery charger shall be UL 1236 listed and designed that it shall not be damaged and shall not trip its circuit protective device during engine cranking or it shall be automatically disconnected from battery during cranking period. The charger shall be mounted inside the emergency generator enclosure. The charger shall have a 7-day/24-hour timer control. The charger shall include an ammeter and voltmeter, Power ON pilot light, AC failure relay and light, and a low and high DC voltage alarm and relay.

H. Battery:

The battery shall be lead-acid type with sufficient capacity to provide 90 seconds total cranking time without recharging. The battery shall be adequately rated for the specific generator set. The battery shall be encased in hard rubber or plastic, shall be housed in an acid resistant frame, and shall be furnished with proper cables and connectors, together with rack and standard maintenance accessories.

I. Base Mounting:

A suitable number of spring-type vibration isolators with a noise isolation pad shall be provided to support the set and its liquids. Isolators shall be bolted to concrete generator pad.

J. Electrical Connections:

All connections to the generator set shall be underground.

K. Cooling System:

The generator set shall be equipped with an engine-mounted radiator sized to maintain safe operation at 110 degrees Fahrenheit maximum ambient temperature. A blower type fan shall be used directing the airflow from the engine through the radiator. The motor shall be equipped with a crankcase heater. The entire cooling system shall be filled with 50 percent glycol-water solution.

L. Fuel System:

1. Regulated Tanks - a fuel tank that has a capacity greater than 550 gallons.

   Regulated tanks are subject to F.A.C. 62.762 and must have registration submitted and insurance in place. Both registration and monthly visual inspection reports shall be kept on site and readily available for review by the Federal Department of Environmental Protection (FDEP) and/or the Florida Department of Health (DOH). Any tank installation that is greater than 1320 gallons shall have a Spill

Prevention, Control, and Countermeasure Plan (SPCC) completed by the Engineer of Record prior to installation and registration as per the COUNTY and Title 40 Code of Federal Regulations (CFR), Part 112. Tanks shall have a 1993 sticker and content "diesel" label located in a conspicuous location that can be seen by anyone approaching the tank for inspection or fueling.

2. Non-Regulated Tanks - a fuel tank that has a capacity of less than 550 gallons.

   Non-regulated tanks do not require registration or insurance and will be visually inspected quarterly and shall have a 1993, "Less than 550 Gallons" sticker and a content "diesel" label applied to the tank in a conspicuous location that can be seen by anyone approaching the tank for inspection or fueling.

3. All fuel tanks that are to be incorporated into a design drawing shall be reviewed and signed off by COUNTY staff prior to 100 percent plans for CIP projects being submitted for review or Level 2 approval for private development projects involving such infrastructure to be dedicated to PCU. Prior to ordering any fuel tank, the following will take place. Five signatures will be collected from the appropriate COUNTY staff that acknowledges a proposed delivery and installation of a fuel tank. Those signatures will come from the offices of Purchasing, PCU, Risk (insurance), Risk (regulatory) and Fleet Management. The PCU Environmental Staff shall be notified thirty (30) days prior to delivery to a COUNTY facility.

4. Fuel Storage Tank:

   a. All fuel tanks shall be double wall steel or steel and concrete tanks with an interstitial annular space.
   b. Provide fuel tanks sized as required for 48 hours of continuous runtime.
   c. Two fuels tanks in series is the maximum allowed at any one facility.
   d. Fuel tanks requiring a day tank for the generator shall include a rupture basin for the day tank.
   e. All fuel lines shall be installed above ground with a concrete pad separating the piping from the ground. The piping will be secured to the concrete every five feet to avoid vibration. The pipe shall be black iron with threaded ends. Pipe dope shall be used at all connections. No thread tape shall be used. Underground piping is prohibited for the fuel delivery system.
   f. All external tanks (non-belly tanks) shall have hurricane tie downs.
   g. Provide audible alarm when liquid level in tank reaches 90 percent of the capacity.
   h. Non-regulated tanks may have visual leak detection.
   i. Regulated tanks shall be equipped with the following fuel monitoring system:
      a) Fuel tank level control panel for tank gauging, leak sensing, and audible/visual alarm annunciation. Panel shall be NEMA 4X construction.
      b) Provide 4-20mA output proportional to tank level and dry contact outputs for leak indication, and high-high, low, and low-low levels suitable for connection to SCADA control panel.

c) Provide audible alarm for high and low levels and leak detection.
d) Provide visual indication of tank level.
e) If two tanks of 500 gallons, or greater, are installed at one site, both tanks shall follow the "regulated" installation procedures, meaning both tanks shall be equipped with the Pneumercator system.
f) Provide Pneumercator type TMS-1000D console with MP55xS level probe and LS-600 series leak sensor.

5. Paint:

   The fuel piping shall be painted red. The spill bucket, handrails, and front of stair tread shall be painted yellow. Vent pipes and all other appurtenances shall be painted black.

6. Fueling:

   No fuel will be delivered to any tank prior to pressure testing and inspection by COUNTY staff. This includes but is not limited to testing of the generator. Fuel for testing and the first delivery to fill the tanks shall be at the CONTRACTOR's expense.

7. Inspection and Testing:

   Inspection of the fuel tank and piping shall be completed by a member of the PCU Environmental staff. Inspection by anyone other than a member of the PCU Environmental staff will not relieve the CONTRACTOR or ENGINEER of responsibility or be accepted. Pressure testing of the fuel lines shall be conducted with a member of PCU Environmental staff present. The test will be conducted for two (2) hours at 5 PSI.

8. Violations:

   All violations of the rules set forth by the Polk County Environmental Regulatory Committee shall be punishable as set forth by the Florida Department Environmental Protection. Any and all fines charged to the COUNTY as a result of regulatory violations on the part of a contractor will be paid by the contractor. All violations incurred by the CONTRACTOR will be reported to the Polk County Purchasing Division.

N. Exhaust System:

1. The generator set supplier shall provide a residential grade critical-type silencer, with flexible exhaust fittings, properly sized and installed, according to the manufacturer's recommendation. The silencer shall be mounted so that the engine does not support its weight.
2. Exhaust pipe size shall be sufficient to ensure that measured exhaust backpressure does not exceed the maximum limitations specified by the generator set manufacturer. The exhaust system shall be stainless steel and include a flexible, seamless, stainless steel connection between the engine exhaust outlet and the muffler. The exhaust system shall be a part of generator enclosure. A stainless

steel weatherproof rain cap shall be installed over the exhaust pipe.

O. Weatherproof Enclosure:

1. Enclosure and all other items shall be designed and built by engine manufacturer as an integral part of the entire generator set in accordance with UL 2200 and shall be designed to perform without overheating in the ambient temperature specified.
2. Enclosure shall be constructed of 14 or 16-gauge sheet aluminum suitably reinforced to be vibration free in the operating mode. Enclosure shall have a rating of 75 db at the perimeter of the lift station site. Enclosure hardware shall be stainless steel.
3. Four hinged doors shall be provided to allow complete access without their removal. Doors shall be pad lockable on handles.
4. Each door shall have at least two latch-bearing points.
5. Panels shall be completely and simply removable for major service access. Additional doors in front of the radiator shall be supplied for easy removal of radiator assembly.
6. Enclosure shall be waterproof and the roof shall be peaked to allow drainage of rainwater.
7. Baked enamel finish with primer and finish coat shall be painted before assembly. All fasteners shall be stainless steel.
8. Unit shall have sufficient guards to prevent entrance by small animals.
    a. Batteries shall be designed to fit inside enclosure and alongside the engine and shall be easily removable for service. Batteries under the generator are not acceptable.
    b. Unit shall have coolant and oil drains outside the unit to facilitate maintenance. Each drain line shall have a high quality valve located near the fluid source.
    c. Fuel filter shall be inside the base perimeter and located so spilled fuel cannot fall on hot parts of engine or generator. A cleanable primary fuel strainer shall be used to collect water and sediment between tank and main engine fuel filter.
    d. Crankcase fumes disposal shall terminate in front of the radiator to prevent oil from collecting on the radiator core and reducing cooling capacity.

P. Automatic Transfer Switch:

1. The automatic transfer switch shall be the product of a single manufacturer and housed in a NEMA 3R Type 304-stainless steel enclosure with drip shield and door gasket. There shall be permanently affixed to the interior side of the enclosure door both a data-plate that includes generator kVA/kWkW, fuel tank capacity, rated fuel consumption, serial and model number of generator set, and a 10-inch x 12-inch pocket for log sheet storage.
2. The transfer switch shall be provided with the following features:

a. Complete protection, close differential voltage sensing relays monitoring all three phases (pick-up set for 95 percent of nominal voltage, dropout set for 85 percent nominal voltage).
b. Voltage sensing relay on emergency source (pick-up set for 95 percent of nominal frequency).
c. Time delay on engine starting-adjustable from 1 second to 300 seconds (factory set at three second)
d. Time delay normal to emergency transfer-adjustable from zero second to 300 seconds (factory set at one second). The CONTRACTOR shall request time delay settings in accordance with the priority rating or their respective loads.
e. Time delay emergency to normal transfer-adjustable 30 seconds to 30 minutes (factory set at five minutes), and time delay bypass switch shall be provided on door of the switch cabinet.
f. Unload running time delay for emergency engine generator cooling down-adjustable from zero to five minutes (factory set at five minutes) unless the engine generator control panel includes the cool down timer.
g. A dual time on neutral position shall be present from emergency power to regular utility power upon generator exercise routine.
h. Provisions shall be adequate for monitoring the condition of the generator under the SCADA system. Provide dry contacts for monitoring of the following status signals:
    a) Switch in Auto.
    b) Switch in Utility Position.
    c) Switch in Generator Position.
    d) Utility Power Available.
    e) Generator Power Available.
    f) Fault.

3. Manufacturers:
    a. Emerson/ASCO
    b. Cummins
    c. Russelectric
    d. Eaton/Cutler-Hammer

2.08 INSTRUMENTATION

A. Provide instrumentation as shown on the PLANS and as required by Section 512 entitled “Wastewater Lift Station Standards and Specifications”. Wire all analog instrumentation to the SCADA control panel for local and remote monitoring.

B. Level Element/Transmitter, Hydrostatic, Wastewater:

1. General: Measure and transmit signal proportional to water level. Provide cable

length and level range as required for lift station.

2. Type: Hydrostatic.
3. Wetted materials may be stainless steel, titanium, Teflon, or Kynar.
4. Provide with sintered metal filter or desiccant vent to prevent water intrusion into the vent tube.
5. Loop-powered 4-20mA transmitter with integral lightning protection.
6. Provide with all necessary installation materials. Provide strain relief cord for cable hanging.
7. The element/transmitter shall be specifically designed for wastewater application.
8. Manufacturer:
    a. Endress and Hauser, Waterpilot FMX 21 with 42mm heavy duty construction.
    b. Keller America, Level Rat.
    c. Blue Ribbon, BC001 Birdcage type.

C. Large Float Level Switches:

1. General: Actuate contact at set liquid level.
2. Type: Teflon coated stainless steel float with mercury switch.
3. 6.5-inch maximum actuation differential.
4. Provide switches with stainless steel mounting cable kit including 15-pound anchor and stainless steel cable clamps.
5. Manufacturer:
    a. Anchor Scientific, Roto-Float.
    b. Siemens, 9G.
    c. Contegra, FS 96.

D. Pressure Gauges:

1. General: Pressure indication with range 0 – 60 psi.
2. Type: Bourdon tube with glycerin fill.
3. Phenolic case with 4-1/2” diameter dial and glass window.
4. Connection size: 1/2” lower connection.
5. Manufacturer:
    a. Ashcroft, 1279 series.
    b. Ametek, 1980 series.
    c. Wika, XSEL series.

E. Pressure Transmitter:

1. General: Measure and transmit signal proportional to pressure.
2. Provide with 0-150 psi range.
3. Loop-powered with 4-20mA output with HART.
4. Silicone filled with 1/2" NPT connection.
5. NEMA 4X coated aluminum housing.
6. Provide installation brackets, stand, and block and bleed valves.
7. Manufacturer:
   a. Rosemount; Model 2051.
   b. Siemens; Sitrans P.
   c. Endress and Hauser; Cerebar S.

F. Electromagnetic Flow Meter and Transmitter:

1. General: Measure, indicate, and transmit the flow of a conductive process liquid in a full pipe.
2. Type: The magnetic flow meter shall be of the low frequency electromagnetic induction type and shall produce a DC-pulsed signal directly proportional and linear to the liquid flow rate..
3. Provide flow range as required with a minimum 10:1 turndown ratio.
4. Features:
   a. Zero stability feature.
   b. Empty pipe detection.
   c. Measure bi-directional flow.
5. Metering Tube: The metering tubes shall be constructed of stainless steel with carbon steel flanges. All magnetic flow meters shall be designed to mount directly in the pipe between ANSI Class 150 flanges and shall consist of a flanged pipe spool piece with laying length of at least 1-1/2 times the meter diameter.
6. Enclosure: NEMA 6P continuous submergence.
7. Liner: Hard rubber or polyurethane.
8. Electrodes: Type 316 Stainless Steel or Hastelloy C.
9. Grounding rings: Provide two (2) type 316 stainless steel, if required.
10. The length of the section of straight pipe before and after the meter shall be a minimum of five (5) times the outside diameter of the pipe or as otherwise recommended by the manufacturer.
11. Transmitter:

a. NEMA 4X construction remote mounted.

b. Power 120Vac, 60Hz.

c. Digital LCD display with configuration menu and keypad.

d. 4-20mA output proportional to flow with HART.

e. Mount transmitter on separate stand with sunshield and face north.

12. Calibrated in an ISO 9001 or NIST certified factory.

13. Manufacturer:

a. Foxboro; 9100A with IMT25.

b. Siemens; Sitrans F M Mag 5100 W with F M MAG 5000.

c. ABB; WaterMaster.

G. Outdoor Instrument Surge Suppression:

1. General: Provide surge suppression for all 2, 3, and 4-wire instrumentation. Ground surge suppressor in accordance with manufacturer's instructions.

2. NEMA 4X enclosure.

3. UL 1449 Listed.

4. LED indication where available.

5. Manufacturers: Phoenix Contact, Weidmuller, Emerson/Edco.

2.09 ELECTRICAL GROUNDING SYSTEM

A. Lift stations shall be grounded in accordance with the NEC and IEEE 142-2007, Recommended Practice for Grounding for Industrial and Commercial Power Systems. All grounding systems shall be tested by the 3-point fall of potential test in accordance with ANSI/IEEE Standard 81, or approved equivalent testing. Documentation shall include all test apparatus information and results in both tabular and graphical formats, where applicable.

B. General: Provide 5/8-inch diameter copper clad steel ground rods 10-feet in length.

a. Provide ground rods around the concrete wet well pad perimeter at all four corners. Provide additional ground rods as required to ensure ground rods have a separation of approximately 20-feet.

b. Provide ground rod box for most accessible ground rod to allow for access for testing purposes. Ground rod box shall be Christy No. G5, Lightning and Grounding Systems Inc. I-R series, Alltec Corp. TW-FL8T, or approved equal.

C. Connectors:

a. Below grade connectors and connections to reinforcing steel shall be exothermic weld type, Erico Cadweld or Cadweld Exolon.

b. All other connectors shall be mechanical type copper alloy as manufactured by Erico, Burndy, or Thomas and Betts.

D. Conductors:

a. Provide grounding ring connecting all system ground rods. Ground ring conductor shall be minimum #2/0 tinned stranded copper. Install ground ring approximately 30 inches below grade and 30 inches away from the wet well.

b. Provide #2/0 tinned stranded copper wire to equipment and structures as noted below.

c. Provide minimum #6 AWG green XHHW insulated copper stranded ground wire to instrumentation and equipment as noted below.

E. The following outlines minimum grounding requirements:

a. Bond wet well cover to wet well structural steel using #2/0 tinned copper wire.

b. Bond metallic valve vault covers to ground system using #2/0 tinned copper ground wire.

c. Bond control panel ground bus to grounding system using minimum #6 insulated copper ground.

d. Bond generator frame and neutral to grounding system with #2/0 tinned copper ground wire in accordance with the NEC.

e. Bond utility system neutral to grounding system with #2/0 tinned copper ground wire in accordance with the NEC.

f. Bond metallic enclosures to grounding system with minimum #6 insulated copper ground wire.

g. Bond chain link fencing to nearest ground rod using #2/0 tinned copper ground wire.

h. Ground all surge suppression and instrumentation in accordance with manufacturer's instructions using minimum #6 insulated copper ground wire.

i. Ground electromagnetic flow meter grounding rings with #6 insulated copper ground wire.

j. Ground all analog instrumentation shielded cables at one end at the control panel ground bus.

k. Bond together system neutrals, service equipment enclosures, exposed noncurrent-carrying metal parts of electrical equipment, metal raceways, ground conductor in raceways and cables, receptacle ground connections, and metal piping systems.

l. Bond all metallic railing, supports, and cable racks with minimum #2/0 tinned copper ground wire.

2.13 VALVE ACTUATORS

A. The actuators shall be suitable for use on a nominal 460-volt or 220-volt three-phase

60-hertz power supply and are to incorporate motor, integral reversing starter, local control facilities, and terminals for remote control and indication connections. It shall be possible to carry out the setting of the torque, turns, and configuration of the indication contacts without the necessity to remove any electrical compartment covers.

B. The electric motor shall be Class F insulated with a time rating of at least 15 minutes at 104 degrees Fahrenheit (40 degrees Celsius) or twice the valve stroking time, whichever is the longer, at an average load of at least 33 percent of maximum valve torque. Electrical and mechanical disconnection of the motor should be possible without draining the lubricant from the actuator gear case. Plugs and sockets are not acceptable as a means of electrical connection for the motor.

C. Motor Protection:

1. Protection shall be provided for the motor as follows:
   a. The motor shall be de-energized in the event of stall when attempting to unseat a jammed valve.
   b. A thermostat to protect against overheating shall sense motor temperature.

D. Gearing:

The actuator gearing shall be totally enclosed in an oil-filled gear case suitable for operation at any angle. All main drive gearing must be of metal construction. Where the actuator operates gate valves or large diameter ball or plug valves, the drive shall incorporate a lost-motion hammer blow feature. For rising spindle valves, the output shaft shall be hollow to accept a rising stem and incorporate thrust bearings of the ball or roller type at the base of the actuator, and the design should be such as to permit the gear case to be opened for inspection or disassembled without releasing the stem thrust or taking the valve out of service. Standard SAE80EP gear oil shall be used to lubricate the gear case.

E. Hand Operation:

1. A hand wheel shall be provided for emergency operation and engaged when the motor is declutched by a lever or similar means. The hand/auto selection lever should be pad lockable in both “hand” and “auto” positions. It should be possible to select hand operation while the actuator is running or start the actuator motor while the hand/auto selection lever is locked in "Hand" without damage to the drive train.

2. The hand wheel drive must be mechanically independent of the motor drive, and any gearing should be such as to permit emergency manual operation in a reasonable time. Clockwise operation of the hand wheel shall give closing movement of the valve unless otherwise stated in the job specification. For safety purposes, it shall be possible to disengage the electric drive with the declutch lever. This disengagement and any subsequent reengagement shall not cause any damage to the valve or operator, even with the motor running.

F. Drive Bushing:

1. The actuator shall be furnished with a drive bushing easily detachable for machining to suit the valve stem or gearbox input shaft. Normally, the drive bush shall be positioned in a detachable base of the actuator. Thrust bearings, when housed in a separate thrust base, should be of the sealed-for-life type.

G. Torque and Turns Limitations:

1. Torque and turns limitation to be adjustable as follows:

   a. Position setting range: 2.5 to 100,000 turns, with resolution to 7.5 degrees of actuator output. Torque setting: 40 to 100 percent rated torque. Torque sensing must be affected directly electrically or electronically. Extrapolating torque from mechanically measured motor speed is not acceptable due to response time. Torque measurement shall be independent of variations in frequency, voltage, or temperature.

   b. “Latching" to be provided for the torque sensing system to inhibit torque off during unseating or during starting in mid-travel against high inertia loads.

   c. The electric circuit diagram of the actuator should not vary with valve type remaining identical regardless of whether the valve is to open or close on torque or position limit. An inexpensive setting tool is required for non-intrusive calibration and interrogation of the actuator. This setting tool will provide speedy interrogation capabilities as well as security in a non-intrusive intrinsically safe watertight casing.

H. Remote Valve Position and Actuator Status Indication:

1. In the event of a (main) power (supply) loss or failure, the position contacts must continue to be able to supply remote position feedback and maintain interlock capabilities. If batteries are required to maintain contact functionality, then the actuator vendor shall provide a supply sufficient for 30 continuous days of unpowered operation with one complete valve cycle every hour. A backup power source must be provided in the actuator to ensure correct remote indication should the actuator be moved manually when the power supply is interrupted. Four contacts shall be provided which can be selected to indicate any position of the valve with each contact externally selectable as normally open or normally closed. The contacts shall be rated at 5-ampere, 250-VAC, 30-VDC.
2. At a minimum, the following contact outputs shall be provided for each open/close service valve actuator:
   a. Open.
   b. Closed.
   c. Remote Selected.
   d. Fault.
3. At a minimum, the following signals shall be accepted from the control panel for open/close service valve actuator control:

a. Open Command.
b. Close Command.

4. At a minimum, the following status signals shall be provided for each modulating valve actuator:
   a. Position Feedback, analog 4-20mA.
   b. Fault, discrete contact.
   c. Remote, discrete contact.
5. At a minimum, the following signals shall be accepted from the control panel for modulating service valve actuator control:
   a. Position Command, analog 4-20mA.

I. Local Position Indication:

The actuator must provide a local display of the position of the valve, even when the power supply is not present. The display shall be able to be rotated in 90-degree increments so as to provide easy viewing regardless of mounting position. The actuator shall include a digital position indicator with a display from fully open to fully closed in one percent increments. Green and red lights corresponding to open (green) and closed (red) positions shall be included on the actuator with both lights on indicating mid-travel position

J. Integral Starter and Transformer:

1. The reversing starter, control transformer, and local controls shall be integral with the valve actuator, suitably housed to prevent breathing and condensation buildup. For "On/Off" service, this starter shall be an electromechanical-type suitable for 60 starts per hour and of rating appropriate to motor size. For modulating duty, the starter shall be suitable for up to a maximum of 1,200 starts per hour. The controls supply transformer shall be fed from two of the incoming three phases. It shall have the necessary tapings and be adequately rated to provide power for the following functions:
   a. 120-VAC energization of the contactor coils;
   b. 24-VDC output where required for remote controls; and
   c. Supply for all the internal electrical circuits.
2. Easily replaceable fuses shall protect the primary and secondary windings.

K. Integral Push Buttons and Selector:

1. Integral to the actuator shall be local controls for open, close, and stop, and a local/remote selector switch, pad lockable in any one of the following three positions:
   a. Local Control Only;
   b. Off (No Electrical Operation); and
   c. Remote Control plus Local Stop Only.
2. It shall be possible to select maintained or non-maintained local control. The

local controls shall be arranged so that the direction of valve travel can be reversed without the necessity of stopping the actuator.

L. Wiring and Terminals:

1. Internal wiring shall be of tropical grade PVC insulated stranded cable of appropriate size for the control and three- phase power. Each wire shall be clearly identified at each end. The terminals shall be embedded in a terminal block of high tracking resistance compound. The terminal compartment shall be separated from the inner electrical components of the actuator by means of a watertight seal.
2. The terminal compartment of the actuator shall be provided with a minimum of three threaded cable entries. When required, a forth cable entry shall be provided. All wiring supplied as part of the actuator to be contained within the main enclosure for physical and environmental protection. External conduit connections between components are not acceptable. Control logic circuit boards and relay boards must be mounted on plastic mounts to comply with double insulated standards. No more than a single primary size fuse shall be provided to minimize the need to remove single covers for replacement. A durable terminal identification card showing plan of terminals shall be provided attached to the inside of the terminal box cover indicating:
   a. Serial Number;
   b. External Voltage Values;
   c. Wiring Diagram Number; and
   d. Terminal Layout.
3. This must be suitable for the contractor to inscribe cable core identification beside terminal numbers.

M. Enclosure:

1. Actuators shall be O-ring sealed and listed IP68 and NEMA 4X/6 for submergence to 7 meters for 72 hours. Actuators shall have an inner watertight and dustproof O-ring seal between the terminal compartment and the internal electrical elements of the actuator that fully protects the motor and all other internal electrical elements of the actuator from ingress of moisture and dust when the terminal cover is removed on site for cabling. Enclosure protection of NEMA 6, IP68, shall be guaranteed without the need of suitable cable glands. The enclosure shall allow for temporary site storage without the need for an electrical supply connection.
2. All external fasteners shall be stainless steel.
3. Actuators for explosion/hazardous applications shall be certified flameproof for Zones 1 and 2 (Divisions 1 and 2) Group A, B, C, and D gases.

N. Startup Kit: Each actuator shall be supplied with a startup kit comprised of installation instructions, electrical wiring diagrams, and spare cover screws and seals.

O. Manufacturer:

1. Auma.
2. Rotork.
3. Beck.

2.14 LED Lighting

A. Provide LED lighting for each liftstation.

B. Features:

1. Two Light Engines, 40 LEDs minimum.
2. Color Temperature: 40K.
3. Distribution: Medium of appropriate type.
4. Power: 120Vac.
5. Provide with motion control and photocell. Wire to On/Off/Motion handswitch.
6. Mounting: Pole Mounted. Mount to 140MPH rated light pole or alternatively extend aluminum H-beam to mounting height and mount light to H-beam.
7. Finish, dark bronze to match light pole or natural aluminum to match H-beam.

C. Manufacturer:

1. Lithonia; DSX1 series.
2. Approved equal.

PART 3 - EXECUTION – TESTING, SERVICE, AND WARRANTY

3.01 GENERAL

A. All installed work shall comply with NECA installation standards.

B. Provide arc flash labeling for all electrical enclosures in accordance with the NEC and NFPA 70E.

C. Face all transmitters and displays north where feasible.

D. The CONTRACTOR shall provide conduit and wire from all signal instruments to the control panel:

a. Analog signals and other DC voltage signals shall be run in a separate conduit from AC voltage wiring to minimize interference.

b. Ground all shielded conductor shields at one end only.

3.02 TESTING

A. Provide lift station startup as specified in the Section 550-B entitled “Testing and Inspection for Acceptance (Lift Stations).

B. The grounding system shall be tested to less than five ohms of resistance. Testing results by a certified testing agency using 3-point fall of potential testing as described by ANSI/IEEE Standard 81, or approved equivalent testing, and documented as described by NETA (International Electrical Testing Association), shall be provided to PCU during lift station startup.

C. Generator and Transfer Switch Testing:

1. Equipment shall be completely assembled and tested at the factory prior to shipment. Certified copies of the data obtained during these tests shall be submitted to PCU.
2. Final tests shall be conducted at the site, after installation has been completed, in the presence of a PCU representative. The emergency generator manufacturer shall furnish a service representative to operate the engine during the tests, to check all details of the installation and to instruct PCU representatives in proper equipment operation.
3. Field tests shall include operating the diesel generating set for carrying normal lift station loads. A full load bank test shall be required unless otherwise noted by PCU. The CONTRACTOR shall fill the main fuel tank at the completion of the tests to 90 percent of tank capacity.
4. The rating of the generator shall be as required to meet the specifications. The generator rating must be substantiated by the manufacturer's standard published curves. Special ratings shall not be acceptable. The set shall be capable of supplying the specified usable kilowatts for the specified duration, including the power required for the pump start-up, without exceeding its safe operating temperature. The generator shall be sized to run all pumps.
5. Transfer switches shall be tested for proper switching operation with the installed generator or with a PCU supplied portable generator in the case of manual transfer switches and breakers.

E. Actuator Testing:

1. Actuator testing shall be performance tested and individual test certificates shall be supplied free-of-charge. The test equipment should simulate a typical valve load and the following parameters should be recorded:
   a. Current at Maximum Torque Setting.
   b. Torque at Maximum Torque Setting.
   c. Flash Test Voltage.
   d. Actuator Output Speed or Operating Time.
2. In addition, the test certificate should record details of specification, such as gear ratios for both manual and automatic drive, closing direction, and wiring diagram code number.

3.03 SERVICE

A. Generator service:

1. Warranty and service center for the generator shall be located in Orange, Lake, Polk, Hillsborough, or Osceola Counties and service response shall be within two hours during normal working hours, and provide emergency service 24 hours 7 days a week.
2. The CONTRACTOR shall submit a written one-year manufacturer's standard service contract for the diesel engine generator and essential support systems, commencing on the date of acceptance of the unit to PCU at the time of acceptance of the unit(s). Contract shall include one preventative maintenance inspection of the installation prior to expiration of the warranty period to assure the safe and dependable operation of the system.

C. Provide one set of all special tools that are required for the normal operation and maintenance of the engine driven generator unit.

3.04 WARRANTY

A. General:

Equipment installed under this Section shall have a minimum one calendar year warranty against defects in materials and workmanship covering parts and labor from the date of PCU acceptance unless otherwise noted below.

B. Generator:

The generator manufacturer shall provide a 36 calendar month non-prorated certified written warranty cover materials, labor, and workmanship.

C. Generator Batteries:

The generator batteries shall be provided with a 48 calendar month warranty for the replacement of the battery if found to be defective.

D. Actuators shall be warranted for 24 calendar months from date of lift station acceptance.

CHAPTER 5 **WASTEWATER** Re-written September 2014

Section 517 **SCADA and Control Panel Specifications** December 2010

PART 1 - GENERAL

1.01 SUMMARY

A. This section provides minimum requirements for the design and construction of County lift station and reclaim water site control panels and related SCADA system requirements. The purpose of this section is to establish conventions and standards used in the selection of instrumentation, hardware, programming, and configuration of lift station control systems to ensure uniformity across all County lift station SCADA and control systems. The County reserves the right to approve changes based on site specific design requirements to ensure consistency with these standards.

B. Unless otherwise noted, the latest version of the following standards shall be used for the design and construction of County SCADA and control systems.

1. Institute of Electrical and Electronics Engineers (IEEE).
    i. Standards as applicable for design and implementation.
2. International Society of Automation (ISA):
    i. S5.1, Instrumentation Symbols and Identification.
    ii. S5.4, Instrument Loop Diagrams.
    iii. S50.1, Compatibility of Analog Signals for Electronic Industrial Process Instruments.
    iv. TR20.00.01, Specification Forms for Process Measurement and Control Instruments.
    v. IEC62443 (ISA-99), Industrial Automation and Control System Security.
3. National Electrical Manufacturers Association (NEMA).
    i. Standards as applicable for design and implementation.
4. National Fire Protection Association (NFPA):
    i. 70 – National Electrical Code.
    ii. 70E - Standard for Electrical Safety in the Workplace.
    iii. 820 – Standard for Fire Protection in Wastewater Treatment and Collection Facilities.
5. National Institute of Standards and Technology:
    i. SP-800 series.
6. Underwriters Laboratory, Inc.
    i. 508, Standards for Safety, Industrial Control Equipment.
    ii. 698, Industrial Control Equipment for Use in Hazardous (Classified) Locations.
    iii. Component specific standards as applicable.

C. The CONTRACTOR shall provide and install a control panel and integrate this unit into the County SCADA system as described within this Section. Lift station SCADA monitoring and control components shall consist of a Programmable Automation Controller (PAC), local Operator Interface Terminal (OIT), Ethernet-based radio or digital cellular modem, and central Human-Machine Interface (HMI) graphic screens.

D. At a minimum, the following documents shall be provided for each facility design and construction project:

1. Piping and Instrumentation Diagrams (P&IDs) or detailed control panel shop drawings containing the following:
    i. Process piping and valves, as appropriate.
    ii. Instrumentation.
    iii. Motors and motor control equipment.
    iv. All I/O shall be clearly labeled on the P&IDs and/or wiring diagrams noting whether each point is a Discrete or Analog input or output. All termination locations shall be shown. For Fieldbus or Ethernet I/O, appropriate tables shall be used to list minimum I/O exchange requirements.
    v. Equipment and instrument voltages.
    vi. Equipment and instrument tag numbers.
2. Network block diagrams.
3. Loop specifications and control descriptions outlining all major process control functions and PLC / HMI programming requirements.
4. Design specifications noting all equipment, workmanship, installation, and testing requirements.
5. Construction submittals for all components.
6. As-built construction drawings.
7. Testing documentation.

E. SCADA Panel Types:

1. Type 1 Control Panels provide monitoring and control of reclaimed water sites.
2. Type 2 Control Panels are integrated SCADA RTU and pump control panels providing monitoring, control, and power distribution for lift stations with integrally mounted motor controllers.
3. Type 3 Control Panels are SCADA RTU control panels providing monitoring and control of lift stations having separately mounted motor controllers.
4. See Attachment "A" for typical I/O requirements for Type 1, Type 2 and Type 3 Control Panels with constant speed and variable speed motor controllers.

F. The CONTRACTOR shall integrate lift station monitoring and control into the County's existing central Trihedral VTScada HMI system.

1.02 APPROVED SUPPLIERS

A. The SCADA and control panel supplier shall be one the following approved suppliers (listed alphabetically):

1. Curry Controls Company
2. DCR Engineering
3. Revere Control Systems
4. Rocha Controls
5. Unitron Controls

PART 2 - PRODUCTS

2.01 GENERAL REQUIREMENTS

A. Provide equipment compatible with the County's existing central SCADA system to ensure proper communications and data transfer. Components listed in this section are based on the latest manufacturer's models and specifications at the time the standard was developed. Provide the manufacturer's equivalent state of the art model at the time of construction for each item specified.

B. Equipment shall be in conformance with the appropriate "Approved Materials Checklist" found in Section 550-C. Equipment suppliers shall provide a minimum one year system warranty for all control panel components.

C. Use products of a single manufacturer of the same series device to achieve standardization.

D. Provide nameplates and service legends for all panels and components and provide stainless steel tags for all field devices.

E. All components used shall be UL listed or recognized for their intended use and bear the appropriate UL mark.

F. Number and tag each wire with machine printed heat shrink wire tags. Numbers shall match panel drawings and include field device tag number where applicable.

G. Grounding:
   1. Ground all devices and instrumentation in accordance with manufacturer's instructions, the National Electrical Code, and IEEE 142-2007 Recommended Practice for Grounding of Industrial and Commercial Power Systems.
   2. Furnish separate copper bus bars for signal and shield ground connections.
   3. Furnish and install door grounding kit for enclosures.
   4. Ground all DIN Rail.
   5. Ground surge suppressors with the shortest possible ground conductor length.
   6. Ground bus bars at a single ground point.

2.02 PANEL CONSTRUCTION

A. This section outlines general panel construction requirements for Type 1, 2, and 3 Control Panels.

B. Design and fabricate all control panels in accordance with UL 508A and UL 698A as appropriate for the installation. All panels shall bear the UL listing mark for enclosures stating "Listed Enclosed Industrial Control Panel" per UL 508A or UL 698A.

C. The control panel shall be manufactured using quality workmanship and components, and upon completion shall be completely factory tested using the three phase line voltage source for which the panel is intended. All control and alarm operations shall be performed using external, simulated signals to ensure proper operation.

D. Control panels shall be designed to be similar to other County control panels designed to the requirements specified herein. The intent of this standard and specification is to provide consistent design and construction of lift station and

reclaim water control panels. Components provided and control panel layouts and wiring shall closely match existing County control panels of similar type.

E. All wiring in panels shall be in duct type wireway or a flexible protective sleeve where a wireway is not practical. All wire shall be terminated to the terminal block. The use of wire nuts or similar connections is prohibited.

F. Provide white powder-coated mild steel back panel. All components shall be mounted on the plane of the back panel with backup power and UPS batteries mounted near the bottom of the panel enclosure on a separate shelf with a plug-in wiring harness for easy removal.

G. All panel components shall be rated for the maximum expected temperature of the control enclosure including solar heat gains.

H. At a minimum, all outdoor panel enclosures shall be NEMA 4X white painted 304 Stainless Steel with a top mounted white painted solar shield. All indoor panel enclosures shall be NEMA 12 painted steel.
    a. Outdoor enclosures shall be provided with all control interface components, including displays and hand switches accessible from behind the front door of the panel on a dead-front to allow operation without exposure to live circuits of any voltage and to prevent outdoor exposure to these components. All adjustments shall be accommodated from the dead-front of the panel including breaker operation to de-energize the enclosure, individual pumps, and control sections. Aluminum dead-front construction shall be either powder coated black with laser etched tagging or unfinished brushed aluminum with phenolic nameplates.
    b. Indoor enclosures shall be provided with all control interface components, including displays and hand switches accessible from outside of the front door. Indoor enclosures shall be provided with separately mounted motor control equipment. Dead-front construction is not required for these control panels.
    c. Size enclosures to adequately house all components with sufficient space to allow for maintenance. All panels shall be provided with the appropriate quantity of corrosion-inhibiting vapor capsules.

I. Nameplates: All equipment enclosures, circuit breakers, control switches, indicator pilot lights and other control devices shall be identified with laser etched naming on dead-fronts or permanently affixed legend plates and phenolic-type engraved nameplates.

J. Provide outdoor mounted enclosures with breather and drain as manufactured by:
    a. Hoffman, H2Omit.
    b. Cooper Crouse-Hinds, ECD Type 4X Drain and Breather.
    c. Approved equal.

K. Lighting: Door switched fluorescent or LED lighting with protective lighting cover.

L. Receptacles: DIN Rail mounted as manufactured by Allen-Bradley, Weidmuller, or Phoenix Contact.

M. All enclosures shall be equipped with a lockable 3-point latching system that maintains enclosure NEMA rating without the use of clamps.
N. All exterior hardware and hinges shall be stainless steel.
O. There shall be permanently affixed to the interior side of the enclosure door both a nameplate and a 10-inch by 12-inch pocket for log sheet storage. The nameplate shall contain the following information: voltage, phase, rated horsepower, rpm, date manufactured, pump and control panel manufacturer's name, pump data, including impeller data, operating point and head, kilowatt input, amperes at the operating point and at least two other points on the pump curve, and pump serial numbers. There shall be a permanently affixed document pocket in the interior side of the exterior enclosure door to include a laminated wiring diagram and bill of materials.
P. Control panel enclosure manufacturers:
    a. Hoffman.
    b. Rittal.
    c. Schaefer.
Q. Type 1 and 3 Control Panels without Integral Motor Controllers:
    a. Type 1 and 3 control panels are powered by 120Vac circuits and do not require panel mounted generator receptacles. Power these control panels from a source having generator backup power.
    b. Control panels shall include PAC, OIT, communication, and control components only.
    c. Furnish main circuit breaker for 120Vac power feed and a circuit breaker on each individual 120Vac branch circuit distributed from the power panel. Provide a fused disconnect type terminal block for all 24Vdc power distribution.
    d. Provide outdoor enclosures with dead-front construction with access to HMI, control switches and indicators from behind the front door.
R. Type 2 Control Panels with Integral Motor Controllers:
    a. Control panels shall include both SCADA controls and pump motor controls in the same enclosure with higher voltage pump power distribution and lower voltage SCADA controls fully separated by a full and continuous metal barrier. SCADA control sections and pump power distribution sections shall have separate dead-fronts to allow work on isolated sections of the enclosure.
    b. Provide enclosures with dead-front construction with access to HMI, control switches and indicators from behind the front door as well as all major breakers for main panel feed, control power, and individual pump breakers.
    c. Provide multi-lug power distribution block assemblies for parallel tapped 3-phase power distribution.
    d. Circuit Breakers:
        i. Main power feed and each pump motor shall be protected by a 3-pole molded case circuit breaker in accordance with the

"Approved Materials Checklist".

ii. Coordinate required breakers with provision of manual transfer switch to determine if only a main breaker or main and generator breakers with mechanical interlock are required.
iii. Provide breakers in accordance with NEMA AB 1.
iv. Provide breakers with minimum 22,000-ampere RMS symmetrical rating, minimum at 480 volts, unless otherwise required.
v. Tripping: Indicate with operator handle position.

e. Power Control Transformer:
   i. On 480-volt control panels, provide a control power transformer with a minimum size of 2.0KVA to supply 120 Vac power for starter coils, 20 ampere duplex receptacle, indicator pilot lights, alarm horn, alarm light, PAC, OIT, etc.
   ii. The primary side shall have both legs fused. The secondary side shall have one leg fused and the other grounded.
   iii. Provide transformer with sufficient capacity to power connected load.
f. Motor Control Components:
   i. The panel shall contain a motor starter for each motor. The motor starter shall be an across the line non reversing magnetic starter with individual solid state smart overload protection. Provide a solid-state soft-start motor starter with a shorting contactor for motors greater than 25 horsepower. Local power company regulations shall govern.
   ii. Selector switches shall be installed on the face of the inner dead front door unit. Selector switches shall be a heavy-duty oil tight "Hand-Off-Auto" three-position switch to control the operation mode of each pump motor starter.
   iii. Magnetic Starters:
      1. NEMA Type Open Enclosure motor starter.
      2. Starter Type: Non-reversing.
      3. NEMA Size: As required, size 1 minimum.
      4. Manufacturer: Schneider Electric/Square D.
   iv. Solid State Smart Overload:
      1. Provide solid state overloads for use with across the line magnetic motor starters.
      2. Monitors, controls, and protects pump motors.
      3. Communication:
         a. Ethernet Modbus TCP.
         b. Built in webserver.
         c. All I/O available via Ethernet.
         d. Coordinate IP addressing with the County.
      4. Modules: Main controller and expansion module for voltage and power monitoring.

5. Provide the following hardwired I/O for each motor:
    a. Run Command.
    b. On Status.
    c. Remote Status.
    d. Fail Status.
6. Protection Functions:
    a. Thermal overload.
    b. Phase imbalance and overload.
    c. Phase reversal.
    d. Ground fault.
    e. Stalling.
    f. High and low power, voltage, and amps.
    g. Coordinate all protection functions with pump and motor supplier. Adjust parameters based on actual running conditions to prevent nuisance tripping.
7. Metering Functions:
    a. Current, all phases.
    b. Voltage, all phases.
    c. Motor temperature.
    d. Frequency.
    e. Power.
    f. Power factor.
8. Manufacturer: Schneider Electric, TeSys T.

v. Solid State Reduced Voltage Soft Starter
1. Provide solid state reduced voltage soft starter for all motors 25HP and larger.
2. Enclosure: NEMA 1.
3. UL 508 Listed.
4. Sized as required for motor FLA plus service factor.
5. Adjust starting parameters based on soft starter and pump supplier recommendations and requirements to ensure smooth starting and stopping and to meet generator starting requirements.
6. Provides integral motor protection.
7. Provide feeder breaker with shunt trip or isolation contactor as required by manufacturer for positive power shutoff during a starter fault condition.
8. Communication:
    a. Ethernet Modbus TCP.
    b. Built in webserver.
    c. All I/O available via Ethernet.
    d. Coordinate IP addressing with the County.
9. Provide the following hardwired I/O (at a minimum):
    a. Run Command.

b. On Status.
c. Remote Status.
d. Fail Status.

10. Provide the following additional I/O via the Ethernet interface (at a minimum):
    a. Current, all phases.
    b. Voltage, all phases.
    c. Motor temperature.
    d. Frequency.
    e. Power.
    f. Power factor.
    g. Fault condition.
11. Manufacturer: Schneider Electric, Altistart 48.

vi. Variable Frequency Drives (VFD's):

1. Provide VFD's where required by the County or the design ENGINEER.
2. Enclosure: NEMA 1.
3. UL 508 Listed.
4. Sized as required for motor FLA plus service factor.
5. Adjust starting parameters and minimum speed based on VFD and pump supplier recommendations and requirements to ensure smooth starting and stopping.
6. Provides integral motor protection.
7. Provide VFD inverter technology and required filters to meet IEEE 519 harmonic distortion requirements and pump motor protection requirements.
8. Communication:
    a. Ethernet Modbus TCP.
    b. Built in webserver.
    c. All I/O available via Ethernet.
    d. Coordinate IP addressing with the County.
9. Provide the following hardwired I/O (at a minimum):
    a. Run Command.
    b. On Status.
    c. Remote Status.
    d. Fail Status.
    e. Speed Command.
    f. Speed Feedback.
10. Provide the following additional I/O via the Ethernet interface (at a minimum):
    a. Current, all phases.
    b. Voltage, all phases.
    c. Motor temperature.
    d. Frequency.

e. Power.
f. Power factor.
g. Fault condition.
h. Torque.

11. Manufacturer: Schneider Electric, Altivar 61/71.

vii. Temperature and Seal Fail Relays:

1. Provide relay module for submersible pumps to monitor high motor temperature and seal failure/moisture detection.
2. Provide dry relay contact outputs, rated 8 Amps at 120Vac, for thermal overload and seal leakage conditions.
3. Selectable automatic and manual reset for temperature condition.
4. Local indication of overtemp or seal leakage.
5. Mount accessible through dead-front or panel front for non-dead-front construction.
6. Operating Temperature: -20 to +55 degrees C.
7. Manufacturers:
   a. MPE, Pump Monitor Relay.
   b. Xylem/Flygt, Mini-CAS.
   c. ATC Diversified Electronics.

S. Control Panel General Equipment (select all exact component types as required for application):

a. Wiring:

i. All power wires shall be THW or THWN 75 degree Celsius insulated stranded copper conductors and shall be appropriately sized for the given load application. All control circuit wire shall be type THW/THWN stranded. All wiring within the enclosure shall be neatly routed by the use of slotted type wiring duct with snap on type covers.

ii. Interior wiring shall be neatly bundled with nylon ties and include sufficient looping across the hinges to prevent wire damage, with each end of conductor marked (ID'd) and color coded in accordance with UL Standard 508A.

iii. All wiring shall be numbered and tagged so that each wire corresponds with the lift station's electrical schematic. Terminal points of all terminal strips shall be permanently identified. All terminal numbers and identifying nomenclature shall correspond to and be shown on electrical diagrams. All wiring shall be permanently identified with heat shrink preprinted labels or permanent clip-on labels and be shown on electrical schematic diagrams.

iv. Surge suppressor leads to be as short as practical.

v. Control wiring shall be no smaller than #14 AWG.

b. Control Circuit Breakers:
   i. UL 489 listed.
   ii. DIN rail mounting.
   iii. Manufacturers:
      1. Schneider Electric/Square D; Multi 9 Series.
      2. Allen-Bradley; 1489-A series.
      3. Weidmuller.
      4. Phoenix Contact.

c. Terminal Block:
   i. Screw compression clamp.
   ii. Single level.
   iii. Provide 20 percent spare installed terminal block.
   iv. Rated for minus 55 to 110 degree C.
   v. DIN rail mounting.
   vi. Label all terminal block with appropriate numbers.
   vii. Rated 600Vac.
   viii. Manufacturers:
      1. Schneider Electric/Square D.
      2. Allen-Bradley.
      3. Weidmuller.
      4. Phoenix Contact.

d. Control Relays:
   i. Plug-in socket type.
   ii. Rail mounted.
   iii. LED indicator.
   iv. Push-to-test type.
   v. Rated for minus 25 to 40 degree C.
   vi. Provide hold-down clips.
   vii. Manufacturers:
      1. Schneider Electric/Square D.
      2. Allen-Bradley.
      3. Weidmuller.
      4. Phoenix Contact.

e. Pilot Lights and Hand switches:
   i. Indicating Lights, Watertight:
      1. Heavy-duty, push-to-test type, NEMA 250, Type 4X watertight, industrial type with integral transformer for 120Vac applications and corrosion-resistant service.
      2. Screwed on prismatic lenses and factory engraved legend plates for service legend.
      3. Manufacturers and products:
         a. Square D; Type SK.
         b. Allen-Bradley; Type 800H.

c. Approved equal.

ii. Pushbutton, Momentary, Watertight:
1. Heavy-duty, NEMA 250, Type 4X watertight, industrial type with momentary contacts rated for 120Vac service at 10 amperes continuous and corrosion-resistant service.
2. Standard size, black field, legend plates with white markings for service legend.
3. Manufacturers and products:
a. Square D; Type SK.
b. Allen-Bradley; Type 800H.
c. Approved equal.

iii. Selector Switch, Watertight:
1. Heavy-duty, NEMA 250, Type 4X watertight, industrial type with contacts rated for 120Vac service at 10 amperes continuous and corrosion-resistant service.
2. Standard size, black field, legend plates with white markings, for service legend.
3. Operators: Black knob type.
4. Single-hole mounting, accommodating panel thicknesses from 1/16 to 1/4 inch.
5. Manufacturer and Products:
a. Square D; Class 9001, Type SK.
b. Allen-Bradley; Type 800H.
c. Approved equal.

f. Alarm Horn (enclosure mounted):
i. Provide a vapor proof horn mounted on the side of the control panel for local high-level alarm annunciation.
ii. Provide an alarm silence pushbutton on the exterior of the control panel enclosure which will silence the horn without turning off the alarm light. Automatically reset the circuit when the alarm condition resets to normal.
iii. Function: Audible alarm. Produces sound by electro-mechanical vibration of a diaphragm.
iv. Sound Output Level: 99 dB nominal at 10 feet, adjustable.
v. Enclosure: Cast aluminum, NEMA 4X with panel mount gasket.
vi. Power: 24Vdc.
vii. UL Listed.
viii. Manufacturer:
1. Federal Signal, 450 Vibratone Horn.
2. Approved Equal.

g. Enclosure Surge Suppression:
i. IP 20 DIN rail mounted.
ii. Pluggable surge device with base socket.
iii. Grounded via DIN rail.

iv. LED indication where available.
v. UL 1449 listed.
vi. Provide surge suppression for the following external connections:
    1. Incoming power connections.
    2. Analog signal lines.
    3. Communication signal lines.
vii. Manufacturers:
    1. Phoenix Contact.
    2. Emerson/Edco.
    3. Citel.

h. Power Supplies:
    i. IP20 DIN rail mounted.
    ii. Provide separate power supplies to power panel components and field devices.
    iii. UL 508 listed.
    iv. Manufacturers:
        1. Allen-Bradley.
        2. Weidmuller.
        3. Phoenix Contact.
        4. IDEC.

i. Uninterruptible Power Supply (UPS):
    i. 24Vdc Input/Output UPS with separately mounted batteries.
    ii. UL508 listed.
    iii. Minimum backup runtime: 30 minutes.
    iv. DIN rail mounted.
    v. Manufacturers:
        1. UPS: Transtronics BVUPS or approved equal.
        2. Batteries: Werker or approved equal.

2.03 PAC, I/O, AND OIT REQUIREMENTS

A. Provide equipment compatible with the County's existing central SCADA system to ensure proper communications and data transfer. Remote PAC's shall communicate to the central VTScada server via Ethernet DNP3 communications utilizing poll by exception and general polling loop controlled by the VTScada system. DNP3 communications shall be configured to locally store variables with date and time stamp to allow backfilling of data to the central VTScada system in the case of communication failure.
B. Local lift station control system communications shall be via Modbus TCP to equipment and I/O devices. Configure PAC NOE modules to store and restore smart overload, soft starter, and VFD configuration settings.
C. Configure OITs to store major analog process variables and pump start/stop change of states and trend.
D. Provide all PAC system components, cables, and additional ancillary equipment required for a completely functional PAC system.
E. PAC systems shall be based on the following:

a. Scheider Electric Modicon M340 PACs.

F. PAC I/O
   a. Provide PAC I/O layout similar to other County lift station control panels for similarity between I/O wiring and PAC I/O addressing in the PAC program.
   b. Provide each PAC with a minimum of 20 percent (minimum 2 points) installed spare I/O, of each I/O type, including the necessary terminal block, interposing relays, and surge protection. Pre-wire all I/O to field terminal blocks. Spare I/O is in addition to I/O provided for planned future additions such as planned future pumps or odor control.
   c. Provide at least 20% and a minimum of 2 spare slots in each PAC chassis to accommodate future I/O cards. If the number of spare slots required exceeds the PAC chassis capacity, provide subpanel space and wireway to accommodate a future chassis. Provide empty DIN rail space required to accommodate the future terminal block to support the spare slots.
   d. Use separate I/O modules for parallel controlled equipment such as multiple pumps where feasible. Pumps should be split across multiple I/O cards such that the failure of a single I/O card does not impact the operation of all pumps.
   e. Provide interposing relays for all discrete outputs.

G. PAC Requirements:
   a. Provide complete microprocessor-based programmable device plug-in power supply, communications, and I/O modules for process control and monitoring. Provide all components as necessary for a complete system.
   b. Chassis:
      i. Type: Modicon M340, BMX series.
      ii. Number of Slots: Sufficient for the number of modules required, including spares, plus the required number of empty slots, minimum of 8. Provide expansion bases as required.
      iii. Provide cover on empty slots.
   c. Processor Modules (CPU):
      i. Type: Modicon M340, BMXP342020.
      ii. Supports 1024 discrete and 256 analog I/O.
      iii. Supports up to 4 racks.
      iv. USB and Modbus communication ports, minimum.
      v. Memory: 2 Mbyte internal RAM with supplied compact flash memory card for backup of programs, minimum.
   d. Power Supply Modules:
      i. Type: Modicon M340, BMXCPS2010.
      ii. Input Voltage: 24V dc.
      iii. Quantity: One for each processor chassis and one for each expansion I/O chassis. Include sufficient capacity to power future expansion of all spare (empty) chassis slots.
   e. Network Communications Modules:

i. Type: Ethernet and Fast Ethernet, 100 Mbps.
ii. Communications Module: Modicon M340, BMXNOE100.
    1. Memory: Supplied Flash Memory Card.
    2. Configure to scan motor controller I/O and backup motor controller and overload device settings.
iii. RTU Module: Modicon M340, BMXNOR0200H.
    1. Memory: 128MB Flash Card.
    2. DNP3 over Ethernet.
    3. Modbus TCP.

f. Discrete Input, ac (DI):
    i. Voltage: 24Vdc.
    ii. Points per Modules: 16, isolated.
    iii. Modicon M340, BMXDDI1602.
g. Discrete Output (DO):
    i. Relay Output, 2A.
    ii. Points per Module: 8.
    iii. Modicon M340, BMXDRA0805.
h. Analog Input (AI):
    i. Signal: 4 to 20 mA at 24V dc.
    ii. Analog Input Points per Module: 4 or 8, isolated.
    iii. Modicon M340, BMXAMI0410 or BMXAMI0810.
i. Analog Output (AO):
    i. Signal: 4 to 20 mA at 24V dc.
    ii. Analog Output Points per Module: 4, isolated.
    iii. Modicon M340, BMXAMO0410.
j. Software: Compatible with Modicon Unity Pro.

H. Operator Interface Touchscreen:
a. Provide industrial touchscreen mounted to front or deadfront of control panel as required. At a minimum, the following shall be displayed on touchscreens:
    i. Wetwell Level (Trended) and appropriate alarms.
    ii. Wetwell Setpoint operation.
    iii. Wetwell Level switch status and appropriate alarms.
    iv. Pump Running (Trended), Fault, and Remote status.
    v. Pump Amps (Trended).
    vi. Pump Runtime Counter.
    vii. Pump Phase Monitor Alarm.
    viii. Flow (Trended), if required.
    ix. Flow totalized; Current Day, Previous Day.
    x. Pressure (Trended), if required.
    xi. Alarm Silence Pushbutton.
b. Memory: Minimum 512kB RAM internal with 1GB or larger compact flash or SD card installed for data logging.
c. Ports: USB and Ethernet TCP/IP.

d. Power: 24Vdc
e. Software: Compatible with Vijeo Designer.
f. Resolution: 320 x 240 pixels (minimum).
g. Display: 5.7-inch (minimum).
h. Manufacturers:
    i. Modicon Magelis.

2.04 COMMUNICATION

A. General:
    a. Provide both local and remote communications for lift stations. External communications from lift station to County SCADA system Wide Area Network (WAN) shall be Ethernet-based communications via either digital cellular or 900MHz digital radio systems. Coordinate with County for communications connection between facility and the County WAN. Coordinate with the County to determine radio communications infrastructure necessary to establish reliable communications for each facility. Consult the County on required components for each specific site. Coordinate and test all communications with County Utilities SCADA and Public Safety Radio Shop groups.
    b. Provide local Ethernet and digital communications between controllers, OITs, and smart field components (such as intelligent MCCs, generators, automatic transfer switches, and packaged control systems) via Ethernet Modbus TCP.
    c. Design networks for fault tolerance and for management utilizing SNMP. All general networks shall be a 10/100BASE-TX and Fast Ethernet Fiber where required. Configure all ports to match speed and negotiation of connected equipment.
    d. Design of network systems shall include IP address and VLAN assignments coordinated with the County and existing County infrastructure. VPN tunnels and TCP/IP port based security shall be determined to ensure proper communications and security between facilities.
    e. Network components specified shall be the state of the art at the time of design and construction. Contractor shall provide the latest state of the art hardware available during the submittal process, and shall upgrade features as necessary to meet functional requirements. Network components listed shall outline minimum requirements for each component.
    f. Provide surge suppression for network connected equipment located in vulnerable locations such as connections between buildings or near AC power lines. Provide adequate separation or shielding between communications cabling and other types of cable systems that could interfere with communications.
B. Ethernet Network Hardware Components:
    a. Select network components to meet requirements for each facility for

proper communications and security in accordance with Industry Standards. The following general components shall be used within the SCADA system.

b. Industrial Network Layer 2 Switch, Ethernet, DIN Rail:
    i. Function: Network communications between PLCs, Ethernet connected field components, and HMI's within a lift station.
    ii. Minimum of 8 RJ-45 ports. Provide and select switches with SFP modules as required for fiber connections. Provide ports as required for each site including a minimum of 2 spare ports.
    iii. Support 10/100BASE-TX and Fast Ethernet fiber where required.
    iv. Layer 2 software.
    v. Supports SNMP, IEEE 802.1D, IEEE 802.1Q, Multicast IGMP, IEEE 802.3x.
    vi. Power: 24Vdc.
    vii. IP 20 enclosure.
    viii. Temperature rating: 0 to 60 degrees C.
    ix. UL 508 Listed.
    x. DIN rail mounted.
    xi. Manufacturers:
        1. N-Tron 700 Series.
        2. Hirschmann RS20 series.
        3. Moxa EDS series.

C. Remote Wireless Communications:
    a. Coordinate with County on type of remote communication solution to provide. Remote communications shall be via Verizon Digital Cellular or 900MHz digital radio system as directed by the County.
    b. Digital Cellular Requirements:
        i. Where directed by the County, provide CalAmp Vanguard 3000 Multi-Carrier 3G Cellular Broadband Router Model 140-7230-000.
        ii. Provide multi-band high gain Omni antenna Wilson Electronics Model 301202 and connect with outdoor rated 50-ohm LMR-400 cable with appropriate connectors. Locate and mount antenna to lift station equipment rack or on outside of building in a location to maximize received signal strength.
        iii. Provide PolyPhaser DSXL RF surge protector.
    c. 900MHz digital Ethernet Radio Requirements:
        i. Where directed by the County, provide a Cambium PMP 100 Canopy Connectorized Subscriber Module 9000SMCDD with a KP Performance 900MHz 36-inch yagi antenna Model YA14KPPD mounted approximately 25-feet above grade or as directed by the County and connected with outdoor rated 50-ohm LMR-400 cable with appropriate connectors.
        ii. Provide PolyPhaser inline gas surge protection GT-NFM-AL.

iii. Antenna mast shall be aluminum construction and rated for Florida Building Code wind speed with the attached load. Provide bitumastic or manufacturer recommended coating where aluminum will be in contact with the earth or concrete.

2.05 CONTROL FUNCTIONS

A. Provide the following general control and display functions for PAC's and VTScada HMI interface for all control panels:

1. Configure remote PAC for DNP3 communications to allow store and forward of all data with date and time stamp to ensure all data is communicated if communications are lost and restored. Configure DNP3 for poll by exception to send data to the central HMI when there is a change in state. Configure change of state for all variables.
2. Refer to I/O lists following this section for a listing of all hardwired I/O generally associated with each type of control panel. Modify I/O as required when automatic transfer switches are provided and other special equipment to ensure all equipment is monitored and controlled appropriately. Coordinate all items and I/O not specifically listed with the County.
3. Coordinate remote notification of all alarms with the County.
4. Provide UPS backup of I/O where practical.
5. Display all discrete and all analog variables. Display all variables on appropriate HMI displays. Display status for discrete variables such as ON/OFF/FAIL status for motors and OPEN/CLOSE/FAIL status for valves. Display value and totalizer value when appropriate for analog variables such as process variables, set points, drive speeds, and valve positions. To prevent clutter and to ease operation, some displayed variables will not normally appear on displays but will be accessible through easily identifiable point-and-click targets. Runtime and totalizer counters are an example of variables that might not normally appear on the HMI display.
6. Sound the alarm tone, indicate the alarm condition on appropriate HMI displays, and add to the HMI alarm summary display. Upon acknowledgement, silence the alarm tone and indicate the alarm condition on appropriate HMI displays and the alarm summary display. Remove acknowledged alarms from the alarm summary once they are cleared. Log alarm occurrence, acknowledgement, and clearance in the alarm log file. Coordinate with County as to which alarms will receive remote signaling via autodialer function of the SCADA system.
7. Provide Pump Fail to Run logic and alarms and Valve Fail to Open/Close logic and alarms.
8. Calculate Elapsed Run Time for all motors in the PAC and display on local OIT and HMI.

9. Totalize all flows, in the PAC, for Current Day, Previous Day, Month, and Year and display on local OIT and HMI.
10. Display Daily Max, Min, and Average for all analog process variables.
11. Provide cycle counters for all motors and valves. One cycle is defined as transition from OFF to ON. For valves, one cycle is defined as transition from CLOSED to OPEN.
12. Provide bumpless transfer for all manual to auto and auto to manual PLC modes of operation.
13. Power outage and utility/generator power transitions:
    a. Suppress all nuisance alarms during power outages.
    b. Reset all equipment so that it is available after a power transition.
    c. Provide delays before restarting pumps to ensure pumps do not block load generator or utility.
    d. Monitor power status and transfer switch positions.
14. Provide nuisance alarm suppression to suppress alarms such as low flow when a pump is not running.
15. Coordinate user level security access groups and adjustable parameters with the County.
16. Provide analyzer fail alarm when the analyzer 4-20mA signal is out of range.
17. Provide a communication alarm between the PAC and HMI when communications are lost. To prevent nuisance alarming, the preset delay shall be at least three times the nominal update or polling period of the specific device. For PLC controlled equipment operating under HMI manual control, maintain equipment in the last state following a loss of communications. For PLC controlled equipment under automatic PLC control, maintain automatic equipment control and sequencing during a loss of communications.
18. Provide automatic alternation of lead and lag pumps for lift stations. Auto alternate when all pumps are off. For pumps that normally operate continuously, provide alternation on a daily basis starting at 8 a.m. and provide a manual forced alternate button.
19. Provide high and low alarms for all analog transmitters. Provide high-high, high, and low-low alarms for all level transmitters.
20. A fail-safe input shall be provided indicating intrusion into the control panel. Upon loss of this signal, or a series of devices providing this signal, the RTU shall report an alarm to the central HMI's.
21. Pump Fault hardwired contacts shall include pump leak and temperature alarms from submersible pump monitoring relays.

22. Provide odor control system monitoring, where required.

23. Provide power monitoring, via Ethernet communications, of each smart overload device, solid state soft starter and variable frequency drive to monitor the following parameters:

    a. Fault Status (Alarm).

    b. Loss of Phase (Alarm).

    c. Phase Reversal (Alarm).

    d. Phase Unbalance (Alarm).

    e. Phase A, B, C current in Amps.

    f. Phase-to-Phase Voltage in Volts.

    g. Power in kVA.

    h. Power in kW.

    i. Power Factor.

    j. Monitor or generate alarms for Amps and Voltage out of typical range.

24. Tag Numbering:

    SCADA tag numbering shall be as follows for either analog or digital functions:

    FAC_ TAG_X_Y_ BFN
    e.g., LS123_LIT_001_02_LAHH

    FAC Facility/Lift Station Identifier (6 characters/digits max): Obtain facility identifier from the County for each facility.

    TAG Instrument Tag (4 characters max): This is the instrument or control loop tag as indicated on the P&ID's or Field Tag. Follow ISA designation from Table 1 in ISA Standard 5.1.

    X Loop Number (3 digits max): This is the loop number indicated on the P&ID's and field device tag.

    Y Unit Number (2 digits max): Where applicable, use where multiple sets of units are provided for the same control loop.

    BFN Block Function or Clarifying Abbreviation (4 characters max): In some cases a block function is required to further identify the block or I/O point, e.g. the tag for a level transmitter high-high alarm would be FAC_ TAG_X_Y_ LAHH. Coordinate abbreviations with the County.

B. Type 1 Control Panel Requirements:

1. A Type 1 SCADA Control Panel shall be used for reclaimed water sites without pumps, such as remote metering sites for irrigation and ground water recharge. The panel shall accommodate both monitoring and control functions.
2. These sites require analog signal monitoring of flow and pressure. Some stations may require motorized valve control to modulate flow through the site.
3. Design, furnish and install a solar power pack when a 120 VAC, 8-amp power supply is not readily available.
4. Refer to Attachments for Type 1 Control Panel Typical I/O.
5. Where required, provide control of reclaim water stations as follows:
   a. Manual Operation of Flow Control Valve: If local switch at the valve is in LOCAL position, then the valve can be opened and closed using local open and close pushbuttons. If local switch at the valve is in OFF position, then the valve will stay in current position. Show the current position of the valve and show the valve as LOCAL and UNAVAILABLE at the HMI/OIT.
   b. Manual Operation from HMI/OIT: If local switch at the Flow Control Valve is in REMOTE position, and the soft switch at the HMI/OIT is in MANUAL, then the valve can be opened to an operator entered percent position using the soft switches at the HMI/OIT. Show the valve as REMOTE and AVAILABLE.
   c. Automatic Operation from HMI/OIT: If local switch at the Flow Control Valve is in REMOTE position, and the soft switch at the HMI/OIT is in AUTOMATIC, then provide proportional and integral action control of valve position as follows to maintain an operator input flow rate:
      i. Process variable is Reclaim Water Flow.
      ii. Set Point is operator entered flow rate in GPM.
      iii. Controlled device is Flow Control Valve Position.
      iv. Provide set point deviation alarm if flow cannot be maintained within +/- 10 percent of set point.

C. Type 2 and 3 Control Panels with Constant Speed Pumps:

1. This section outlines control requirements for Type 2 and 3 control panels for constant speed lift station pumps.
2. Provide all general control and monitoring functions as specified in the general requirements of Control Functions and to meet the functional intent of lift station operation as outlined by all lift station specifications.
3. Pumps having MCC (non-panel mounted) motor starters shall have hand switches located at the MCC in lieu of switches mounted at the control panel. However, the same functional requirements apply to both integral and non-integral motor starter installations.

4. Refer to Attachments for Type 2 and 3 control panels with constant speed pumps Typical I/O. Pump solid state smart overloads and solid state reduced voltage soft starters shall have hardwired and Ethernet I/O as shown in the attached Typical I/O list.
5. Provide float type level switches for low-low level, high level, and high-high level annunciation and associated control. Coordinate switch actuation heights with default level set points to prevent interferences.
6. Local, remote, and automatic controls are required for Type 2 and 3 control panels with constant speed pumps. The following outlines general control requirements:
    a. Manual operation of each constant speed pump: If local dead-front mounted hand switch is in HAND then the pump will start and run continuously. Show the pump as LOCAL and UNAVAILABLE at the HMI/OIT.
    b. Manual operation from HMI/OIT: If local hand switch on the dead-front is in REMOTE position, and the soft switch at the HMI/OIT is in MANUAL, then the pump can be started or stopped using the soft switch at the HMI/OIT. Show the pump as REMOTE and AVAILABLE.
    c. Automatic operation of constant speed pump: If local hand switch on the dead-front is in REMOTE position, and the soft switch at the HMI/OIT is in AUTOMATIC, then provide automatic operation as follows:
        i. Provide primary control using the wet well level transmitter.
        ii. Operator enters the following set points:
            i) Low-Low level Alarm.
            ii) Low level shutoff.
            iii) Lead pump start.
            iv) Lag pump start.
            v) Lag-lag pump start etc. dependent on number of pumps.
            vi) High-High level Alarm.
        iii. Pumps start when their associated set point is exceeded. Provide 30 second delay between starting pumps if more than one pump is called to start at the same time.
        iv. All pumps stop when the level falls below the Low Level Shutoff set point.
        v. Alarm on High-High Level transmitter level. Provide remote alarm notification on this alarm.
        vi. Provide pump alternation when all pumps are off.
        vii. Provide the following overrides:

i) Start all pumps via the PAC with a 30 second delay between pump starts when the High Level float switch is activated. This alarm level should be alarmed and provide remote alarm notification.

ii) Start all pumps via hardwired logic with a 30 second delay between pump starts when the High-High level float switch is activated. This operation overrides PAC control. Provide notification of this alarm via SCADA, remote alarm notification, and actuate local alarm horn and light. Allow for remote silencing of alarm horn via SCADA HMI/OIT and provide a local hardwired silence switch on the exterior of the control panel. Pump alternation strategies do not apply when on level float controls.

iii) Stop all pumps when the low level float switch is activated. Provide notification of this alarm via SCADA and remote alarm notification.

iv) Provide alarm at SCADA and remote alarm notification when there are level sensor and float mismatches. For example, provide an alarm when the low level float switch is actuated but the level transmitter is reading high level.

d. Configure all smart overloads (SO) and soft starters (SS) to have configuration settings backed up by PLC NOE cards. Give each motor control device a unique name identified as LSXXX_SO_YY (Lift Station Number Smart Overload Local unit number). For example, Lift Station No. 127 Pump 1 would read LS127_SO_01.

e. Monitor generator and related systems where provided. Ensure that the appropriate delays are provided to prevent multiple pumps from starting at the same time under generator power. This includes high level situations where multiple pumps may be called during a switchover from utility to generator power. Provide the required delays in the PAC and for hardwired control overrides. Pump alternation strategies do not apply when on generator power.

D. Type 2 and 3 Control Panels with Variable Speed Pumps

1. This section outlines control requirements for Type 2 and 3 control panels for variable speed lift station pumps.

2. Provide all general control and monitoring functions as specified in the general requirements of Control Functions and to meet the functional intent of lift station operation as outlined by this USSM.

3. Pumps having MCC (non-panel mounted) VFD's shall have hand switches located at the MCC in lieu of switches mounted at the control panel. However, the same functional requirements apply to both integral and non-integral motor starter installations.

4. Refer to Attachments for Type 2 and 3 control panels with variable speed pumps Typical I/O. Pump VFD's shall have hardwired and Ethernet I/O as shown in the attached Typical I/O list.
5. Provide float type level switches for low-low level, high level, and high-high level annunciation and associated control. Coordinate switch actuation heights with default level set points to prevent interferences.
6. Local, remote, and automatic controls are required for Type 2 and 3 Control Panels with VFD's. The following outlines general control requirements:
    a. Manual operation of each variable speed pump: If local dead-front mounted hand switch is in HAND, then the pump will start and run continuously. Speed shall be adjusted via local potentiometer. Show the pump as LOCAL and UNAVAILABLE at the HMI/OIT.
    b. Manual operation from HMI/OIT: If local hand switch on the dead-front is in REMOTE position, and the soft switch at the HMI/OIT is in MANUAL, then the pump can be started or stopped using the soft switch at the HMI/OIT and speed adjusted via an operator entered speed at the HMI/OIT. Show the pump as REMOTE and AVAILABLE.
    c. Automatic operation of constant speed pump: If local hand switch on the dead-front is in REMOTE position, and the soft switch at the HMI/OIT is in AUTOMATIC, then provide automatic operation as follows:
        i. Provide primary control using the wet well level transmitter.
        ii. Operator enters the following set points:
            i) Low-Low level alarm
            ii) Low level shutoff
            iii) Pump Start Level
            iv) Pump Control Level set point
            v) High-High level alarm
        iii. The lead pump starts when the level is above the Pump Start Level.
        iv. The running pump(s) modulates speed to maintain the Pump Control Level set point via PID control algorithm. PID controller shall be properly tuned for smooth control.
        v. If the running pumps reach 100% speed for an adjustable delay initially set at 2 minutes, then the next lag pump shall start. Adjust the speed of all running pumps together to maintain the level set point.
        vi. If all running pumps reach a minimum operating speed for an adjustable delay initially set at 1 minute, then shut off the last pump started. Determine minimum pump run speed during startup based on pump operation and pump operational curves to ensure pumps run on their published curves of operation.

vii. When only one pump is running at its minimum speed and the level is below the level set point, then continue to run this pump until the low level shutoff is reached. Stop all running pumps when the low level shutoff is reached.

viii. Alternate pump operation on a 24-hour basis or when all pumps are off.

ix. Alarm on High-High Level Transmitter level. Provide remote alarm notification on this alarm.

x. Provide the following overrides:

i) Start all pumps at 100% speed via the PAC with a 30 second delay between pump starts when the High Level float switch is activated. This alarm level should be alarmed and provide remote alarm notification.

ii) Start all pumps at 100% speed via hardwired logic with a 30 second delay between pump starts when the High-High Level float switch is activated. This operation overrides PAC control. Provide notification of this alarm via SCADA, remote alarm notification, and actuate local alarm horn and light. Allow for remote silencing of alarm horn via SCADA HMI/OIT and provide a local hardwired silence switch on the control panel dead-front. Pumps do not alternate when on hardwired controls.

iii) Stop all pumps when the low level float switch is activated. Provide notification of this alarm via SCADA and remote alarm notification.

iv) Provide alarm at SCADA and remote alarm notification when there are level sensor and float mismatches. For example provide an alarm when the low level float switch is actuated but the level transmitter is reading high level.

d. Configure all Variable Frequency Drives (VFD's) to have configuration settings backed up by PAC NOE cards. Give each motor control device a unique name identified as LSXXX_VFD_YY (Lift Station Number Variable Frequency Drive unit number). For example, Lift Station No. 127 Pump 1 would read LS127_VFD_01.

e. Monitor generator and related systems where provided. Ensure that the appropriate delays are provided to prevent multiple pumps from starting at the same time under generator power. This includes high level situations where multiple pumps may be called during a switchover from utility to generator power. Provide the required delays in the PAC and for hardwired control overrides. Pump alternation strategies do not apply when on generator power.

PART 3 - EXECUTION

3.01 FACTORY TESTING

A. Assemble and test all controls panels at the supplier's factory. Notify County of factory testing a minimum of 2 weeks in advance (in County) and 4 weeks in advance (outside County) to allow County personnel the opportunity to witness testing. The County reserves the right to witness factory testing of all control panels.

B. Control panel supplier shall completely factory test control panels prior to shipment to ensure it is operational and ready for field installation. At a minimum, the following shall be verified:

1. Construction matches approved drawings and County standards.
2. Test all I/O. Simulate all I/O external to control panels and verify PLC and HMI receives I/O.
3. Correct deficiencies prior to shipping control panel.

3.02 INSTALLATION OF CONTROL PANEL

A. It shall be the responsibility of the Contractor to mount the control panel. All required hardware and software components necessary for a complete and functional SCADA and control panel system shall be provided. A Florida certified electrical Contractor shall perform the installation. All work shall be in accordance with the current edition of the NEC and UL Standards.

B. Protect enclosures and other equipment containing electrical, instrumentation and control devices, including spare parts, from corrosion through the use of corrosion-inhibiting vapor capsules.

3.03 GENERAL INSTALLATION

A. Provide all required installation and work for a completely functional lift station control and monitoring system including power and signal wiring for all field instrumentation and between the control panel and all remotely mounted I/O interfaces including motor controllers and packaged control systems.

B. Install all equipment in accordance with manufacturer's instructions.

C. All enclosures, ground busses, antenna masts and surge arrestors shall be grounded and bonded to the lift station ground system in accordance with national standards and manufacturer's instructions.

D. All hardware and brackets used to mount the control panel shall be stainless steel.

E. Provide a radio survey to verify required antenna height for reliable radio communication.

F. Upon completion of work, thoroughly clean the work area and interior of the control panel. Ensure fresh corrosion inhibiting vapor capsules have been provided.

3.04 FIELD TESTING, STARTUP, AND ACCEPTANCE

A. Notify County of field testing and startup schedule a minimum of 2 weeks in advance. The County reserves the right to witness all field testing and County acceptance is required before any lift station is considered complete. Refer to Section

entitled "Testing and Inspection for Acceptance of Lift Stations" for additional requirements.

B. At a minimum, the following tests shall be completed:

1. Test all I/O between field devices and lift station PAC controller. Where possible, real process variables and operations shall be used. When real operation is not feasible, I/O points shall be simulated to show proper operation.
2. Test all field and in-panel communications via Ethernet and serial communications as applicable.
3. Demonstrate all control functions operate properly under all operating scenarios. Where feasible, operation shall be tested under actual operating conditions.
4. Test all monitoring, logging, and control functions from the local OIT.
5. Communication between the control panel and remote SCADA server(s) shall be tested and communication signal strength documented.
6. Test all monitoring, logging, and control functions from the central VTScada system. All change of state and polling functions shall be verified and adjusted as required. I/O exchange after loss of communication shall be tested to ensure all data is correctly logged and time stamped after communications are restored.
7. Test operation of all starting/stopping scenarios for pumps for all control modes on utility and generator power sources. Test generator switching functions in conjunction with pump operation.

C. All field testing shall be documented on PCU approved test forms and signed by the Contractor and control panel supplier.

3.05 SERVICE

A. The SCADA and control panel system supplier shall have four or more factory trained support personnel available within four hours. The system supplier shall have the capability to supply replacement parts and equipment within six business hours of notification from PCU. PCU shall have 24-hour per day access to service personnel by a cell phone or pager. The SCADA and control panel supplier shall maintain a 24-hour answering service that can direct emergency calls to the appropriate service technician. Service representatives who are not specifically trained in the service of PCU's SCADA system are unacceptable.

3.06 DOCUMENTATION

A. The following documents shall be provided prior to acceptance of the lift station by PCU:

1. Complete schematic and wiring diagram, in the latest version of AutoCAD, and bill of materials on compact disc or similar electronic media.
2. Two (2) maintenance manuals with above drawings and manufacturer's maintenance literature bound in three-ring binders;
3. A laminated copy of the schematic and wiring diagram shall be permanently affixed to the interior side of the exterior enclosure door or in control panel door pocket.
4. Documented PAC controller, OIT, and HMI application programs suitable for programming updates to the control system and reuse for standardization of the lift station control system.

3.07 WARRANTY

A. The control panel, including all applications programming, shall have a one calendar year warranty against defects in materials and workmanship covering parts and labor from the date of PCU acceptance. The control panel supplier shall provide all material and labor to repair or replace failed components at no cost to PCU.

B. Warranty service shall be completed within the following period of time:

1. Major issues rendering the control panel non-functional shall have on site response with qualified personnel within one business day.
2. Minor issues involving a failure of the control panel or any of its components shall have on site response within qualified personnel within two business days.
3. PCU will have the option to proclaim any hardware or software failure an emergency if in the opinion of PCU the failure could result in a public health or safety concern.

CHAPTER 5 WASTEWATER

Section 518 Wastewater Treatment Facilities Standards

December 2010

PART 1 - GENERAL

A. This Section shall be applicable to the design of wastewater treatment facilities proposed as part of any development to be constructed in compliance with the LAND DEVELOPMENT CODE, the COMPREHENSIVE PLAN, and as part of the PCU Community Investment Program, when applicable.

B. Design, Construction, and Plan Review:

The design and construction of wastewater treatment facilities associated with COUNTY approved developments shall be in compliance with Chapter 4, 5, and 6 of this MANUAL. PLANS will be reviewed and approved by PCU as part of the subdivision or commercial site plan review process as specified by the LAND DEVELOPMENT CODE.

C. Compliance with Other Regulatory Requirements:

It shall be the responsibility of the DEVELOPER/CONTRACTOR to obtain and comply with all applicable federal, state, and local regulatory permits.

D. The DEVELOPER shall be financially responsible for any proposed designs that require modification to or may adversely affect any portion of PCU's wastewater infrastructure.

PART 2 - DESIGN

A. The design of the wastewater treatment facility shall be designed for the maximum day demand of the design year, as a minimum. Requirements of the FDEP, LAND DEVELOPMENT CODE, and COMPREHENSIVE PLAN, whichever is more restrictive, shall govern. Consideration shall be given to the design requirements of other federal and state regulatory agencies regarding safety requirements, special designs for the handicapped, plumbing, and electrical codes. No part of the plant shall be constructed below the 100 year flood prone elevation as established by FEMA.

B. The wastewater treatment facility shall be sited on a fee simple parcel of land that measures not less than one acre in size.

PART 3 - PLANT LAYOUT

A. The ENGINEER shall consider the functional aspects of the plant layout, provisions for future plant expansion, provisions for expansion of the plant waste treatment and disposal facilities, access roadways, site grading, site drainage, walkways, driveways, and delivery of chemicals.

B. Onsite buildings shall provided with adequate ventilation, adequate lighting, lightning protection, adequate heating, adequate drainage, accessibility of equipment for operation, servicing, and removal, flexibility of operation, operator safety,

convenience of operation, and the placement of chemical storage and feed equipment in a separate room to reduce hazards and dust problems. Main electrical control equipment shall be located above grade and above the 100 year flood prone elevation. Adequate facilities shall be included for shop space and storage consistent with the needs of the designed facilities.

C. All buildings shall be of concrete masonry unit construction with either engineered trusses and coated metal roof systems or hollow core concrete slab based roofs. All structures shall be painted with colors in accordance with PCU standards, unless otherwise approved by PCU. All exterior doors shall be of steel construction and interior doors shall be of wood or steel construction.

D. A permanently mounted standby power generator system of sufficient size shall be required so that potable water may be treated and/or pumped to the distribution system during power outages to meet the average day demand.

E. Adequate monitoring equipment, sample taps, flow meters, and pipe color coding shall be provided.

F. An operation and maintenance manual including a parts list and parts order form, operator safety procedures, and operational trouble shooting section shall be supplied for any proprietary unit installed in the facility.

G. Consideration shall be given to the safety of plant personnel and visitors. The design must comply with all applicable safety codes and regulations that may include the Florida Building Code. Uniform Fire Code, National Fire Protection Association Standards, and OSHA standards.

H. Security measures shall be installed and instituted in accordance with this MANUAL. Appropriate design measures to help ensure the security of water system facilities shall be incorporated. Such measures, as a minimum, shall include heavy duty type locks for exterior doorways, windows, gates, and other entrances to sources, treatment, and water storage facilities, signage, intrusion alarms, motion sensitive flood lighting, and 6 foot high security type fencing topped with 3 strands of barb wire. Facilities secured with electrically operated gates shall include key switches in accordance with the appropriate “Approved Materials Checklist” (See Wastewater Checklist). Other measures may include close circuit monitoring and real time water quality monitoring.

I. Electrical supply to the facility shall be placed underground onsite of the plant property.

J. Other than pipes, conduits, foundations, and footings, the wastewater treatment facility shall be constructed above ground.

K. Lightning protection systems shall be installed and certified in accordance with all applicable sections of UL 96A, "Installation Requirements for Lightning Protection Systems" as published by the Underwriters Laboratories, Inc. A Master Label Certificate of Inspection for Lightning Protection Systems shall be provided to the COUNTY for each such installation.

PART 4 - MATERIALS

A. All materials used in the construction of a wastewater treatment facility shall be in accordance with this MANUAL.

PART 1 – GENERAL WASTEWATER PLANT SCADA STANDARDS

1.01 SUMMARY OF SYSTEM

A. These standards represent minimum requirements for County projects at the time the standards were adopted. The County reserves the right to approve changes based on site specific design requirements

B. Wastewater treatment facilities shall be able to be monitored and controlled remotely. The CONTRACTOR shall provide a Human Machine Interface (HMI) / Supervisory Control and Data Acquisition (SCADA) system, Programmable Logic Controller (PLC), and decentralized Historian for wastewater treatment facility control as identified in this Section.

C. The SCADA process data shall be organized by unit process (UP) as identified below:

Unit Process Number	Process Name
5	Relocated Headworks
10	Influent Pump Station
15	Return Pump Station
20	Headworks/Preliminary Treatment
25	Biological Nutrient Reactor
30	Aeration/Oxidation Ditch
35	Aeration Blowers
37	Intermediate Pump Station
40	Clarifiers
50	Return Activated Sludge/Waste Activated Sludge
60	Tertiary Filtration
70	Disinfection/Chlorine Contact Chamber
80	Chemical Storage and Feed
90	Reclaimed/Reject Storage and Transfer Pumping
100	Reclaimed High Service Pumping
105	Reclaimed Augmentation
110	Sludge Holding/Digestion
115	Sludge Dewatering
120	Operations Electrical Building
130	Maintenance Building
140	Electrical Building

150	Unused
160	Unused
170	Unused
180	Vacuum Truck Receiving Area

D. SCADA tag numbering shall be as follows:
1. Facility = SW
2. Unit Process = 10
3. Function of Device = Level Indicating Transmitter
4. Quantity/Discrete Identifier = 1
    i. E.g. SW_010_LIT_001

1.02 EQUIPMENT TO BE MONITORED AND CONTROLLED

i. The following typical elements at standard unit processes must be monitored and controlled at the various unit processes with alarms as defined:
    a. UP 5/20 Headworks
        i. Influent Flow Meter
        Monitored Data
            1. Instantaneous Flow
            2. Totalized Daily Flow, Current and Previous Day
        Alarms
            1. Out of Range
            2. No Signal
        ii. Mechanical Bar Screen/Level Operated
        Monitored Data
            1. Motor Status
            2. Level in Channel
            3. Screw Conveyor Motor Status
        Alarms
            1. Screen Over-Torque
            2. Screen Fail
            3. Channel Level High
            4. Screw Wash/Press Over-Torque
            5. Screw Wash/Press Fail
        iii. Grit Removal
        Monitored Data
            1. Grit Air Lift Motor Status
            2. Grit Classifier Motor Status
            3. Screw Wash/Press Motor Status
        Alarms
            1. Grit Air Lift Failure
            2. Grit Classifier Failure
            3. Screw Wash/Press Over-Torque

4. Screw Wash/Press Fail

b. UP 10 Influent Pump Station
   i. Influent Flow Meter (may be same as UP 5/20)
      Monitored Data
      1. Instantaneous Flow
      2. Totalized Daily Flow, Current and Previous Day
      Alarms
      1. Out of Range
      2. No Signal
   ii. Pumps
      Monitored Data
      1. Pump Motor Status
      2. Level in Pump Station
      Alarms
      1. Pump Over-Torque
      2. Pump Fail
      3. High Level Alarm
      4. High-High Level Alarm
      5. Low Level Alarm
c. UP 15 Return Pump Station
   i. Flow Meter
      Monitored Data
      1. Instantaneous Flow
      2. Totalized Daily Flow, Current and Previous Day
      Alarms
      1. Out of Range
      2. No Signal
   ii. Pumps
      Monitored Data
      1. Pump Motor Status
      2. Level in Pump Station
      Alarms
      1. Pump Over-Torque
      2. Pump Fail
      3. High Level Alarm
      4. High-High Level Alarm
      5. Low Level Alarm
d. UP 20 Headworks – See UP 5
e. UP 30 Aeration/Oxidation Ditch
   i. Mechanical Aerator
      Monitored Data
      1. Aerator Motor Status
      2. VFD Speed
      3. Dissolved Oxygen (DO)
      4. Oxidation Reduction Potential (ORP)

Alarms
1. Aerator Motor Fail
2. Aerator Motor Over-Torque
3. High DO/ORP
4. Low DO/ORP
5. Aerator Oil Pressure Low

ii. Anoxic Mixer
Monitored Data
1. Anoxic Mixer Motor Status
Alarms
1. Anoxic Mixer Over-Torque
2. Anoxic Mixer Fail

f. UP 40 Clarifiers
i. Clarifier Rake
Monitored Data
1. Clarifier Motor Status
Alarms
1. Clarifier Motor Fail
2. Clarifier Motor Over-Torque

ii. Scum Pumps
Monitored Data
1. Scum Pump Motor Status
Alarms
1. Scum Pump Over-Torque
2. Scum Pump Fail
3. Scum Pump Over Pressure

g. UP 50 Return Activated Sludge/Waste Activated Sludge
i. Flow Meters
Monitored Data
1. Instantaneous Flow (Both)
2. Totalized Daily Flow, Current and Previous Day (RAS)
3. Set to Waste, Current and Previous Day (WAS)
4. Total Wasted, Current and Previous Day (WAS)
5. Valve Status (if common pump station)
Alarms
1. Out of Range
2. Valve Failure
3. No Signal

ii. Pumps
Monitored Data
1. Pump Motor Status
2. VFD Speed
3. Level in Pump Station
Alarms
1. Pump Over-Torque

2. Pump Fail
3. High Level Alarm
4. High-High Level Alarm
5. Low Level Alarm

h. UP 60 Tertiary Filtration
   i. Backwash Filters/Deep Bed Filters
      Monitored Data
      1. Backwash Pump and Wash Unit Motor Status
      2. Level in Filter
      3. Valve Status (if using deep bed)
      4. Total Suspended Solids and/or Nephelometric Turbidity Units
      5. Flow Rate

      Alarms
      1. Pump/Wash Unit Motor Fail
      2. Valve Fail
      3. High Level
      4. Low Level
      5. Flow Rate Out of Range

i. UP 70 Disinfection/Chlorine Contact Chamber
   i. Instrumentation
      Monitored Data
      1. Chlorine Dosage Measurement
      2. Chlorine Residual Measurement
      3. Final pH
      4. Flow Rate
      5. Valve Position for Reject/Storage

      Alarms
      1. Low Chlorine Residual
      2. High Chlorine Residual
      3. Effluent pH Out of Range
      4. Flow Rate Out of Range
      5. Valve Fail

j. UP 80 Chemical Storage and Feed
   i. Chemical Feed and Monitoring
      Monitored Data
      1. Sodium Hypochlorite Level/Volume
      2. Alum Level/Volume
      3. Sodium Hypochlorite Pump Status
      4. Sodium Hypochlorite Pump Stroke
      5. Sodium Hypochlorite Pump Speed
      6. Alum Pump Status
      7. Exhaust Fan Status
      8. Eye Wash Status

      Alarms

1. Sodium Hypochlorite Pump Failure
2. Alum Pump Failure
3. Exhaust Fan Failure
4. Eyewash In Use or Failure
5. High Alum Level
6. Low Alum Level
7. High Sodium Hypochlorite Level
8. Low Sodium Hypochlorite Level

k. UP 90 Reclaimed/Reject Storage and Transfer Pumping

i. Levels/Valves

Monitored Data

1. Ground Storage Tank Levels
2. Calculated Ground Storage Tank Volumes
3. Calculated Rate of Change (gpm) in Storage
4. Reject Storage Tank Levels
5. Calculated Reject Storage Tank Volumes
6. Calculated Rate of Change (gpm) in Reject
7. Transfer Pump Wet Well Level
8. Fill Valve Status
9. In/Eff Valves for Tanks Status

Alarms

1. High Ground Storage Level
2. Low Ground Storage Level
3. High Reject Storage Level
4. Low Reject Storage Level
5. High Wet Well Level
6. Low Wet Well Level
7. Valve Failure

ii. Pumps

Monitored Data

1. Pump Motor Status
2. VFD Speed

Alarms

1. Pump Over-Torque
2. Pump Fail

l. UP 100 Reclaimed High Service Pumping

i. Pumps

Monitored Data

1. Pump Motor Status
2. VFD Speed
3. Pressure
4. Flow Rate

Alarms

1. Pump Over-Torque
2. Pump Fail

3. Flow Out of Range
4. High Pressure
5. Low Pressure

m. UP 105 Reclaimed Augmentation
   i. Pumps
   Monitored Data
      1. Pump Motor Status
      2. Pressure
      3. Flow Rate
      4. Well Level
   Alarms
      1. Pump Over-Torque
      2. Pump Fail
      3. Flow Out of Range
      4. High Pressure
      5. Low Pressure
      6. Well Below Desired Liquid Level Set point

n. UP 110 Sludge Digestion
   i. Blowers
   Monitored Data
      1. Blower Motor Status
      2. VFD Speed
      3. Air Flow Rate
   Alarms
      1. Blower Fail
      2. Flow Out of Range
      3. High Pressure
   ii. Sludge Transfer Pumps
   Monitored Data
      1. Pump Motor Status
      2. VFD Speed
      3. Flow Rate
   Alarms
      1. Pump Fail
      2. Flow Out of Range
      3. High Pressure
   iii. Instrumentation
   Monitored Data
      1. DO or ORP
      2. Liquid Level
      3. Calculated Volume In Digester
      4. Rate of Change (gpm in/out)
   Alarms

1. High DO/ORP
2. Low DO/ORP
3. High Liquid Level
4. Low Liquid Level

o. UP 120 Operations Electrical Building
   i. Electrical Line Power
      Monitored Data
      1. Phase Voltage Difference
      2. Phase Amperage
      3. Tie-Breaker Status
      4. Main Breaker Status
      Alarms
      1. Low Voltage
      2. High Voltage
      3. Loss of Power
   ii. Generator Power
      Monitored Data
      1. Generator Status
      2. Phase Voltage Difference
      3. Phase Amperage
      4. Transfer Switch Status
      Alarms
      1. Low Voltage
      2. High Voltage
      3. Generator Failure
      4. Transfer Switch Failure

p. UP 130 Maintenance Building
   (Not typically utilized)

q. UP 140 Electrical Building
   i. Electrical Line Power
      Monitored Data
      1. Phase Voltage Difference
      2. Phase Amperage
      3. Tie-Breaker Status
      4. Main Breaker Status
      Alarms
      1. Low Voltage
      2. High Voltage
      3. Loss of Power
   ii. Generator Power
      Monitored Data
      1. Generator Status
      2. Phase Voltage Difference
      3. Phase Amperage
      4. Transfer Switch Status

Alarms
1. Low Voltage
2. High Voltage
3. Generator Failure
4. Transfer Switch Failure

1.03 DATA TO BE STORED IN HISTORIAN

A. The following typical data at standard and alarm at unit processes. Historical data shall be stored at a minimum rate of one point every ten seconds, or a change greater than a set dead-band, and shall be stored as defined:
   a. UP 5/20 Headworks
      i. Influent Flow Meter
      Monitored Data
      1. Instantaneous Flow
      2. Totalized Daily Flow, Current and Previous Day
      ii. Mechanical Bar Screen/Level Operated
      Monitored Data
      1. Screen Motor Status
      2. Screw Wash/Press Motor Status
      3. Level in Channel
      Alarms
      1. Screen Fail
      2. Screw Wash/Press Fail
      iii. Grit Removal
      Alarms
      1. Grit Air Lift Failure
      2. Grit Classifier Failure
      3. Screw Wash/Press Fail
   b. UP 10 Influent Pump Station
      i. Influent Flow Meter (may be same as UP 5/20)
      Monitored Data
      1. Instantaneous Flow
      2. Totalized Daily Flow, Current and Previous Day
      Pumps
      Monitored Data
      1. Pump Motor Status
      2. Level in Pump Station
      Alarms
      1. Pump Fail
   c. UP 15 Return Pump Station
      i. Flow Meter
      Monitored Data
      1. Instantaneous Flow
      2. Totalized Daily Flow, Current and Previous Day

ii. Pumps
Monitored Data
1. Pump Motor Status
2. Level in Pump Station
Alarms
1. Pump Fail

d. UP 20 Headworks – See UP 5
e. UP 30 Aeration/Oxidation Ditch
i. Mechanical Aerator
Monitored Data
1. VFD Speed
2. Dissolved Oxygen (DO)
3. Oxidation Reduction Potential (ORP)
Alarms
1. Aerator Motor Fail
ii. Anoxic Mixer
Monitored Data
1. Anoxic Mixer Motor Status
Alarms
1. Anoxic Mixer Fail
f. UP 40 Clarifiers
i. Clarifier Rake
Monitored Data
1. Clarifier Motor Status
Alarms
1. Clarifier Motor Fail
ii. Scum Pumps
Monitored Data
1. Scum Pump Motor Status
Alarms
1. Scum Pump Fail
2. Scum Pump Over Pressure
g. UP 50 Return Activated Sludge/Waste Activated Sludge
i. Flow Meters
Monitored Data
1. Instantaneous Flow (Both)
2. Totalized Daily Flow, Current and Previous Day (RAS)
3. Set to Waste, Current and Previous Day (WAS)
4. Total Wasted, Current and Previous Day (WAS)
5. Valve Status (if common pump station)
Alarms
1. Valve Failure
ii. Pumps
Monitored Data
1. Pump Motor Status

2. VFD Speed
3. Level in Pump Station

Alarms

1. Pump Over-Torque
2. Pump Fail

h. UP 60 Tertiary Filtration

i. Backwash Filters/Deep Bed Filters

Monitored Data

1. Backwash Pump and Wash Unit Motor Status
2. Level in Filter
3. Valve Status (if using deep bed)
4. Total Suspended Solids and/or Nephelometric Turbidity Units
5. Flow Rate

Alarms

1. Pump/Wash Unit Motor Fail
2. Valve Fail

i. UP 70 Disinfection/Chlorine Contact Chamber

i. Instrumentation

Monitored Data

1. Chlorine Dosage Measurement
2. Chlorine Residual Measurement
3. Final pH
4. Flow Rate
5. Valve Position for Reject/Storage

Alarms

1. Valve Fail

j. UP 80 Chemical Storage and Feed

i. Chemical Feed and Monitoring

Monitored Data

1. Sodium Hypochlorite Level/Volume
2. Alum Level/Volume
3. Sodium Hypochlorite Pump Status
4. Sodium Hypochlorite Pump Stroke
5. Sodium Hypochlorite Pump Speed
6. Alum Pump Status
7. Exhaust Fan Status
8. Eye Wash Status

Alarms

1. Sodium Hypochlorite Pump Failure
2. Alum Pump Failure
3. Exhaust Fan Failure
4. Eyewash In Use or Failure

k. UP 90 Storage Transfer Pumping, Ground Storage and Reject Storage

i. Levels/Valves

Monitored Data
1. Ground Storage Tank Levels
2. Calculated Ground Storage Tank Volumes
3. Reject Storage Tank Levels
4. Calculated Reject Storage Tank Volumes
5. Transfer Pump Wet Well Level
6. Fill Valve Status
7. In/Eff Valves for Tanks Status

Alarms
1. Valve Failure

ii. Pumps

Monitored Data
1. Pump Motor Status
2. VFD Speed

Alarms
1. Pump Fail

l. UP 100 Reclaimed High Service Pumping

i. Pumps

Monitored Data
1. Pump Motor Status
2. VFD Speed
3. Pressure
4. Flow Rate

Alarms
1. Pump Fail

m. UP 110 Sludge Digestion

i. Blowers

Monitored Data
1. Blower Motor Status
2. VFD Speed
3. Air Flow Rate

Alarms
1. Blower Fail

ii. Sludge Transfer Pumps

Monitored Data
1. Pump Motor Status
2. VFD Speed
3. Flow Rate

Alarms
1. Pump Fail
2. High Pressure

iii. Instrumentation

Monitored Data
1. DO or ORP
2. Liquid Level

3. Calculated Volume In Digester

n. UP 120 Operations Electrical Building

i. Electrical Line Power

Monitored Data

1. Phase Voltage Difference
2. Phase Amperage
3. Tie-Breaker Status
4. Main Breaker Status

Alarms

1. Low Voltage
2. High Voltage
3. Loss of Power

ii. Generator Power

Monitored Data

1. Generator Status
2. Phase Voltage Difference
3. Phase Amperage
4. Transfer Switch Status

Alarms

1. Low Voltage
2. High Voltage
3. Generator Failure
4. Transfer Switch Failure

PART 2 – COMPONENTS AND INTEGRATION

2.01 SOFTWARE, PLC, COMPUTERS, and NETWORK COMPONENTS

A. The CONTRACTOR shall purchase and install equipment compatible with the PCU existing SCADA central station equipment.

1. Wastewater treatment facility control systems must utilize GE PAC RX3i PLC components.

2. Wastewater treatment facility SCADA controls must be integrated utilizing iFix with the licenses for the latest version supplied as part of the construction effort. CONTRACTOR must verify and utilize the iFix version currently in use by PCU prior to integrating PLC/SCADA.

3. CONTRACTOR shall provide local servers and historian, including a license for GE Historian, latest version, as part of the construction effort.

4. iFix and Historian licenses must be provided with sufficient tags for at least 30% spare tags.

5. Servers provided will be mapped to PCU network by Owner. Hardware to be provided to Owner at a time scheduled at least two (2) weeks in advance for mapping purposes.

B. SCADA Computer Server equipment shall be as follows:
   1. Primary SCADA server
      i. Dell R710 or approved equivalent
      ii. Two Pentium Xeon Hex-Core Processors, 3.0 Ghz min, 12 Mb L3 Cache
      iii. 24 Gb of DDR3 RAM, 1333 MHz, expandable to 128 Mb
      iv. Hard Drives: (2) RAID 1 configuration HD, SAS, SCSI, 15,000 rpm, Hot-Swappable. Size of each drive shall be at least 200% of capacity required for current system implementation.
      v. Multi-use optical drive, 24x, CD-RW/DVD-RW
      vi. Multimedia cards: manufacturer's standard
      vii. Dual Hot-Swappable Power Supplies
      viii. Two IEEE 802.3 network card, dual redundant, 1 GbE
      ix. External 56k modem, V.90 PCI, USB interface, voice and data modem, as manufactured by US Robotics.
      x. Windows Server 2008 R2 Standard Operating System, 5 Client Access Licenses
      xi. Keyboard, Video, Mouse module
      xii. Proficy iFix Software Run License, Latest Version
      xiii. 3-Years Onsite Warranty
   2. Backup SCADA server
      i. Dell or approved equivalent
      ii. Pentium Quad-Core Processor, 3.6 Ghz min, 12 Mb L2 Cache
      iii. 16 Gb of DDR3 RAM, 1333 MHz
      iv. Hard Drives: (2) RAID 1 configuration HD, SATA, 7,200 rpm. Size of each drive shall be at least 200% of capacity required for current system implementation.
      v. Multi-use optical drive, 24x, CD-RW/DVD-RW
      vi. Audio Card: manufacturer's standard
      vii. Video Card: capable of running two monitors and software noted
         1. Dual Channel VGA color graphics, 16X transfer rate
         2. 512 Mb DDR3, min
         3. NVIDIA Quadro NVS 300
      viii. Single Power Supply, 500 kW min
      ix. 101-key Enhanced Keyboard
      x. Mouse: two button with thumb wheel, min
      xi. IEEE 802.3 network card, dual redundant, 1 GbE
      xii. Windows Server 2008 R2 Standard Operating System, 5 Client Access Licenses
      xiii. Proficy iFix Development License, Latest Version
      xiv. (2)-47-inch Flat Panel Displays

xv. 3-Years Onsite Warranty

3. Historian SCADA server
    i. Link with all Historian tags sent to Base One Master Historian
    ii. Dell R710 or approved equivalent
    iii. Dual Pentium Xeon Hex-Core Processor, 3.0 Ghz min, 12 Mb L3 Cache
    iv. 24 Gb of DDR3 RAM, 1333 MHz, expandable to 128 Mb
    v. Hard Drives: (4) RAID 5 configuration HD, SAS, SCSI, 15,000 rpm, Hot-Swappable. Size of drive array shall be at least 200% of capacity required for current system implementation with 5 years of data stored.
    vi. Multi-use optical drive, 24x, CD-RW/DVD-RW
    vii. Multimedia cards: manufacturer's standard
    viii. Dual Hot-Swappable Power Supplies
    ix. IEEE 802.3 network card, dual redundant, 1 GbE
    x. External 56k modem, V.90 PCI, USB interface, voice and data modem, as manufactured by US Robotics.
    xi. Windows Server 2008 R2 Standard Operating System, 5 Client Access Licenses
    xii. Keyboard, Video, Mouse module
    xiii. Proficy iFix Historian, Latest Version
    xiv. Proficy Web Server, Latest Version
    xv. 3-Years Onsite Warranty
4. Additional Equipment
    i. Cisco 1 GbE Network Switch
        1. 24 ports, 4 Dual Ports
        2. 4 Dual Port Uplinks Support 1 GbE Upload and Download
        3. Catalyst 2960S series
    ii. 1 KVM Module, Tripplite B040-008-19
    iii. Tripplite 6 kVA UPS
    iv. Network Rack, 42 RU min
    v. Cable Management Unit for Network Rack
    vi. 24" Monitor, ViewSonic VG2436wm or Equal

C. New plants shall have integrated WiFi throughout the facility in accordance with IEEE 802.11. WiFi shall be able to be utilized for remote SCADA access at any unit process in the plant.
    1. Radio propagation studies shall be performed during design and construction of WiFi networks to ensure WiFi is functional at all unit processes.

D. New unit processes shall have decentralized I/O to limit long runs of buried copper communication. Localized OLMs shall be designed and installed with a fiber connection to carry the information to a point local to the PLC. There the data can be converted back into a readable signal for the PLC.

E. CONTRACTOR to perform testing on integrated systems at key stages in the process. At a minimum, Operational Readiness Testing (ORT) and Performance Acceptance Testing (PAT) shall be performed. Factory Testing and Staging Testing may be added at COUNTY or ENGINEER discretion. Minimum testing requirements shall be as follows:

1. Operational Readiness Test (ORT): Prior to startup test period and PAT, inspect, test, and document that entire Process Instrumentation and Control System (PICS) is ready for operation.

    i. Loop/Component Inspections and Tests:
        1. Check PICS for proper installation, calibration, and adjustment on a loop-by-loop and component-by-component basis.
        2. Provide space on forms for signoff by PICS subcontractor.
        3. Use loop status report to organize and track inspection, adjustment, and calibration of each loop and include the following:
            a. Project name.
            b. Loop number.
            c. Tag number for each component.
            d. Checkoffs/Signoffs for Each Component:
                i. Tag/identification.
                ii. Installation.
                iii. Termination wiring.
                iv. Calibration/adjustment
            e. Checkoffs/Signoffs for the Loop
                i. Field Device Signals Transmitted to the PLCs are Operational: Received/sent, processed, adjusted.
        4. Component calibration sheet for each active field component (except simple hand switches, lights, gauges, and similar items) include the following:
            a. Project name.
            b. Loop number.
            c. Component tag number or PLC register address.
            d. Component code number for field device elements.
            e. Manufacturer for field device elements.
            f. Model number/serial number for field device elements.
            g. Summary of Functional Requirements, for Example:
                i. Indicators and recorders, scale and chart ranges.
                ii. Transmitters/converters, input and output ranges.
                iii. Computing elements' function.
                iv. Controllers, action(direct/reverse) and control modes (P&ID).
                v. Switching elements, unit range, differential

(fixed/adjustable), reset (auto/manual).

h. Calibrations, for Example, but not Limited to:
    i. Analog Devices: Actual inputs and outputs at 0,10, 50, and 100 percent of span, rising and falling.
    ii. Other Field Devices: Actual trip points and reset points.
    iii. Controllers: Mode settings (P&ID).
    iv. Actual inputs or outputs of 0, 10, 50, and 100 percent of span, rising and falling.
    v. Space for comments.
i. Maintain loop status reports, valve adjustment sheets, and component calibration sheets at site and make them available to Engineer at all times.
j. Test and calibrate all fiber optic data links. Document that the dB links are within specified limits and the data communication is error free at specified baud rates.
k. These inspections and tests will be spot checked by Engineer.
l. Engineer reviews loop status sheets and component calibration sheets and spot-check their entries periodically, and upon completion of ORT. Correct deficiencies found.

2. Performance Acceptance Tests (PAT):
    i. Once ORT has been completed and facility has been started up, perform a witnessed PAT on complete PICS to demonstrate that it is operating as required by the Contract Documents. Demonstrate each required function on a paragraph-by-paragraph, loop-by-loop, and site-by-site basis.

    ii. Loop-specific and non-loop-specific tests same as required for Factory Testing except that entire installed PICS tested using actual process variables and all functions demonstrated.

    iii. Perform local and manual tests for each loop before proceeding to remote and automatic modes.

    iv. Where possible, verify test results using visual confirmation of process equipment and actual process variable. Unless otherwise directed, exercise and observe devices supplied by others, as needed to verify correct signals to and from such devices and to confirm overall system functionality. Test verification by means of disconnecting wires or measuring signal levels is acceptable only where direct operation of

plant equipment is not possible.

v. Provide updated versions of the following documentation available to Engineer at site, both before and during tests.
   1. One copy of submittals applicable to the equipment to be tested.
   2. One copy of the Drawings and Specifications together with addenda and applicable change orders.
   3. Make one copy of all O&M manuals.

vi. Specialty Equipment: For certain components or systems provided under this section but not manufactured by PICS Subcontractor, provide services of qualified manufacturer's representative during installation, startup, demonstration testing, and County training. Refer to Article Onsite Services in PICS Subsystems for specific requirements.

vii. Instruments shall be tested at 0 percent, 25 percent, 50 percent, 75 percent, and 100 percent of scale through wired and wireless communications to the PLC and to the HMI insofar as is practical and not to put effluent quality at risk.

2.02 INSTRUMENTATION

A. The CONTRACTOR shall purchase and install instrumentation equipment as standardized below. The equipment aligns with what Polk County Utilities currently utilizes. Exact models shall be determined during design:
   1. Liquid Level
      i. Pressure – Rosemount 3051
      ii. Ultrasonic – Endress Hauser FMU95 or Siemens SITRAN LU
      iii. Approved Equal
   2. Pressure Indicating and Differential Transmitters
      i. Rosemount 3051
      ii. Approved Equal
   3. Pressure Switches
      i. Ashcroft B-Series
      ii. Approved Equal
   4. Pressure Gauges
      i. Ashcroft
      ii. Approved Equal
   5. Flow Meters
      i. Electromagnetic – Foxboro
   6. Chemical Metering Pumps
      i. Prominent
   7. Chlorine Analyzers
      i. Prominent

8. Hach Transmitters
    i. Hach SC200 or SC1000 depending on number of elements
9. pH Element
    i. Prominent – pH sensor
10. Dissolved Oxygen
    i. Hach LDO
    ii. Approved Equal
11. Oxidation Reduction Potential
    i. Hach pHD – ORP sensor
    ii. Approved Equal
12. Turbidity Sensor
    i. HF Scientific – Microtol2
    ii. Approved Equal
13. Motor Operated Valves
    i. Limitorque or Auma Actuators, Valve per Polk County Standards
    ii. Approved Equal
14. Total Suspended Solids (High and Low) and NTU
    i. Hach Solitax
    ii. Approved Equal
15. Sludge Blanket Monitor
    i. Cerlic CAT microP
    ii. Approved Equal

2.03 STANDARD SCREENS

A. The following pages are intended to be standard screens as a basis for creating wastewater treatment facility SCADA pages. The screens shall be used as a basis by both designers and integrators.

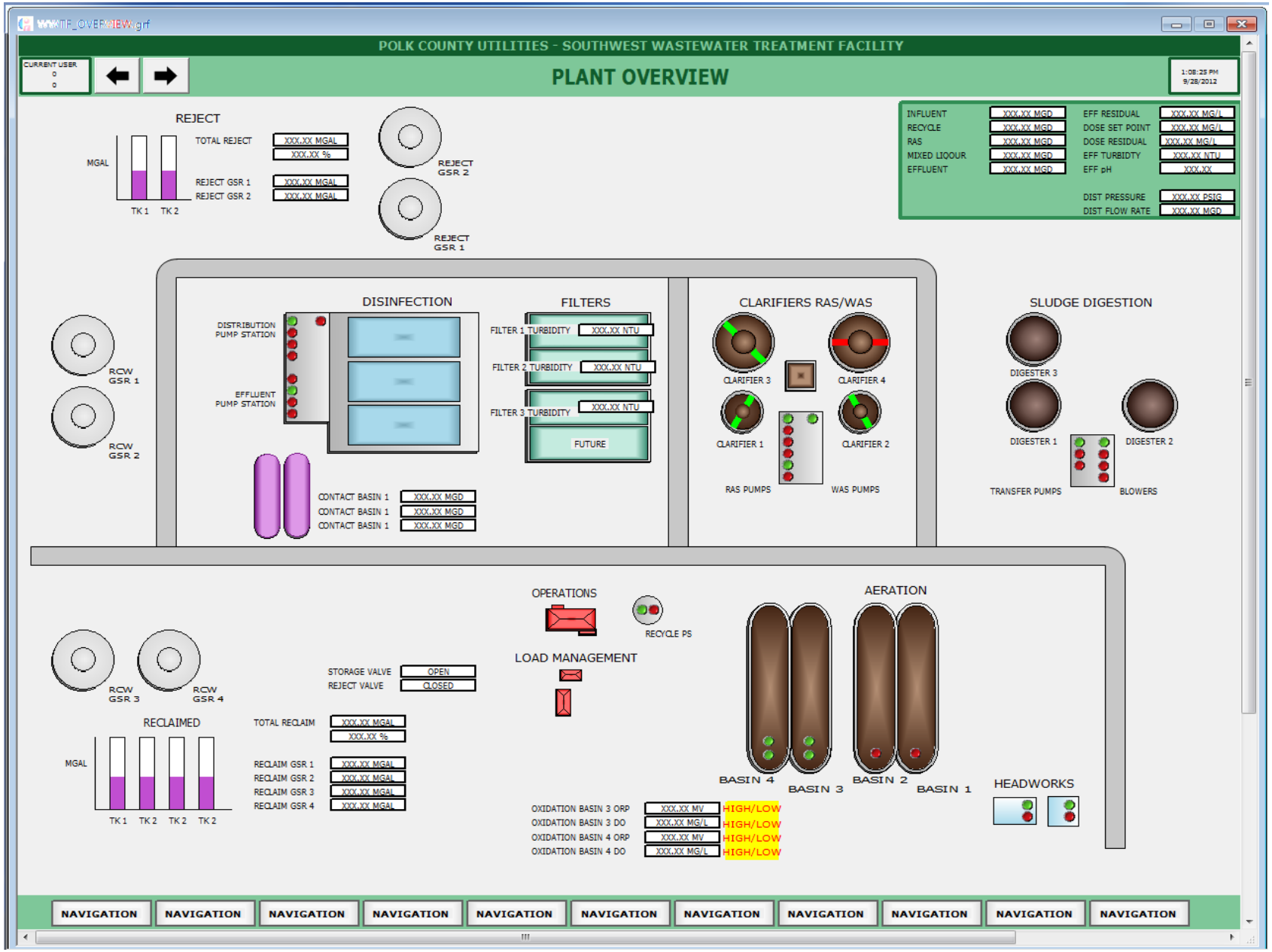
POLK COUNTY UTILITIES - SOUTHWEST WASTEWATER TREATMENT FACILITY
PLANT OVERVIEW
REJECT
TOTAL REJECT
REJECT GSR 1
REJECT GSR 2
DISINFECTION
FILTERS
CLARIFIERS RAS/WAS
SLUDGE DIGESTION
OPERATIONS
LOAD MANAGEMENT
AERATION
RECLAIMED
HEADWORKS
NAVIGATION

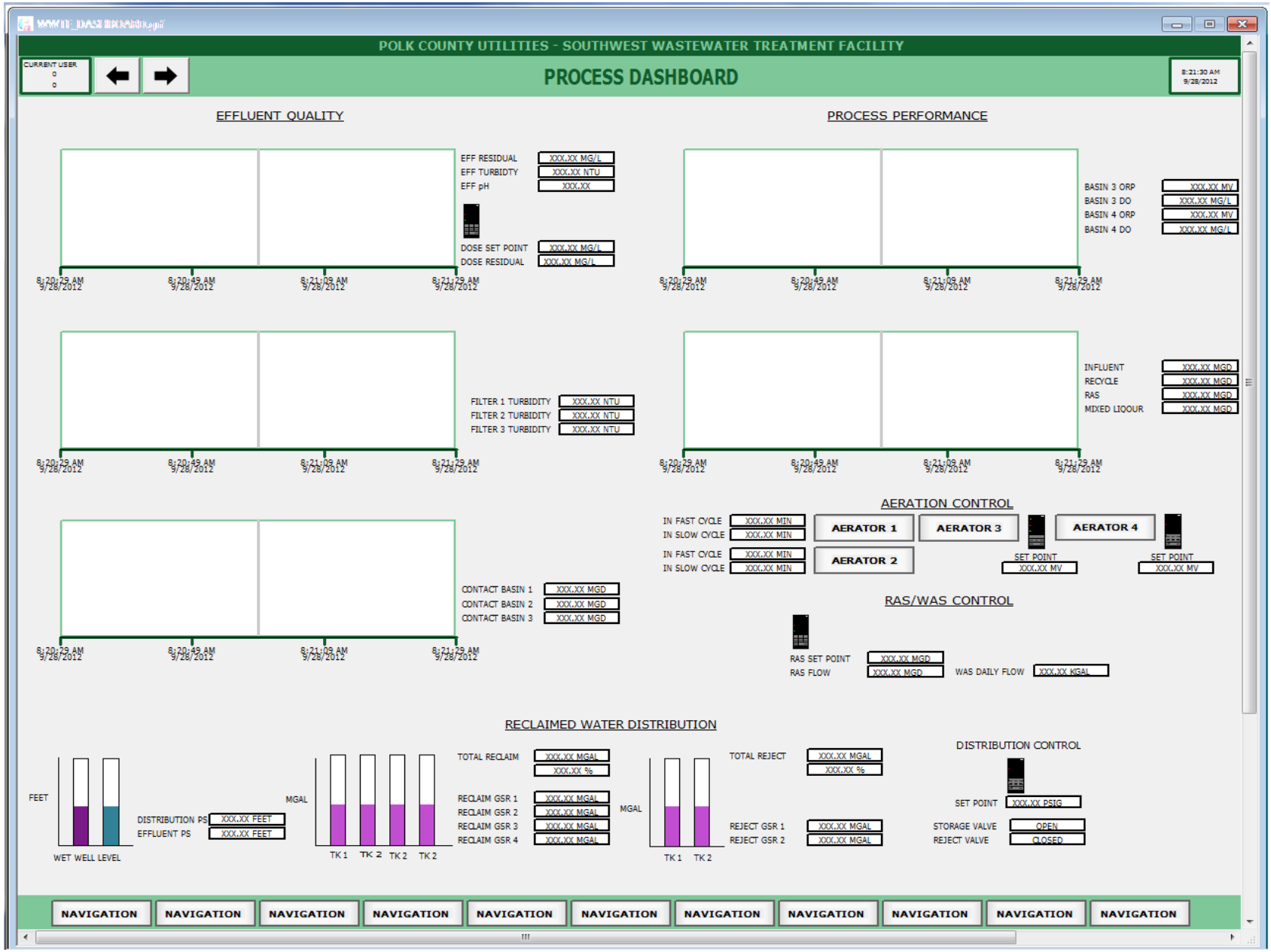
POLK COUNTY UTILITIES - SOUTHWEST WASTEWATER TREATMENT FACILITY
CURRENT USER
PROCESS DASHBOARD
8:21:30 AM
9/28/2012
EFFLUENT QUALITY
EFF RESIDUAL
XXX.XX MG/L
EFF TURBIDTY
XXX.XX NTU
EFF pH
XXX.XX
DOSE SET POINT
XXX.XX MG/L
DOSE RESIDUAL
XXX.XX MG/L
PROCESS PERFORMANCE
BASIN 3 ORP
XXX.XX MV
BASIN 3 DO
XXX.XX MG/L
BASIN 4 ORP
XXX.XX MV
BASIN 4 DO
XXX.XX MG/L
8:20:29 AM 9/28/2012
8:20:49 AM 9/28/2012
8:21:08 AM 9/28/2012
8:21:29 AM 9/28/2012
FILTER 1 TURBIDITY
XXX.XX NTU
FILTER 2 TURBIDITY
XXX.XX NTU
FILTER 3 TURBIDITY
XXX.XX NTU
INFLUENT
XXX.XX MGD
RECYCLE
XXX.XX MGD
RAS
XXX.XX MGD
MIXED LIQOUR
XXX.XX MGD
AERATION CONTROL
IN FAST CYCLE
XXX.XX MIN
IN SLOW CYCLE
XXX.XX MIN
AERATOR 1
AERATOR 3
AERATOR 4
IN FAST CYCLE
XXX.XX MIN
IN SLOW CYCLE
XXX.XX MIN
AERATOR 2
SET POINT
XXX.XX MV
SET POINT
XXX.XX MV
CONTACT BASIN 1
XXX.XX MGD
CONTACT BASIN 2
XXX.XX MGD
CONTACT BASIN 3
XXX.XX MGD
RAS/WAS CONTROL
RAS SET POINT
XXX.XX MGD
RAS FLOW
XXX.XX MGD
WAS DAILY FLOW
XXX.XX KGAL
RECLAIMED WATER DISTRIBUTION
FEET
WET WELL LEVEL
DISTRIBUTION PS
XXX.XX FEET
EFFLUENT PS
XXX.XX FEET
MGAL
TK 1
TK 2
TK 2
TK 2
TOTAL RECLAIM
XXX.XX MGAL
XXX.XX %
RECLAIM GSR 1
XXX.XX MGAL
RECLAIM GSR 2
XXX.XX MGAL
RECLAIM GSR 3
XXX.XX MGAL
RECLAIM GSR 4
XXX.XX MGAL
MGAL
TK 1
TK 2
TOTAL REJECT
XXX.XX MGAL
XXX.XX %
REJECT GSR 1
XXX.XX MGAL
REJECT GSR 2
XXX.XX MGAL
DISTRIBUTION CONTROL
SET POINT
XXX.XX PSIG
STORAGE VALVE
OPEN
REJECT VALVE
CLOSED
NAVIGATION
NAVIGATION
NAVIGATION
NAVIGATION
NAVIGATION
NAVIGATION
NAVIGATION
NAVIGATION
NAVIGATION
NAVIGATION
NAVIGATION

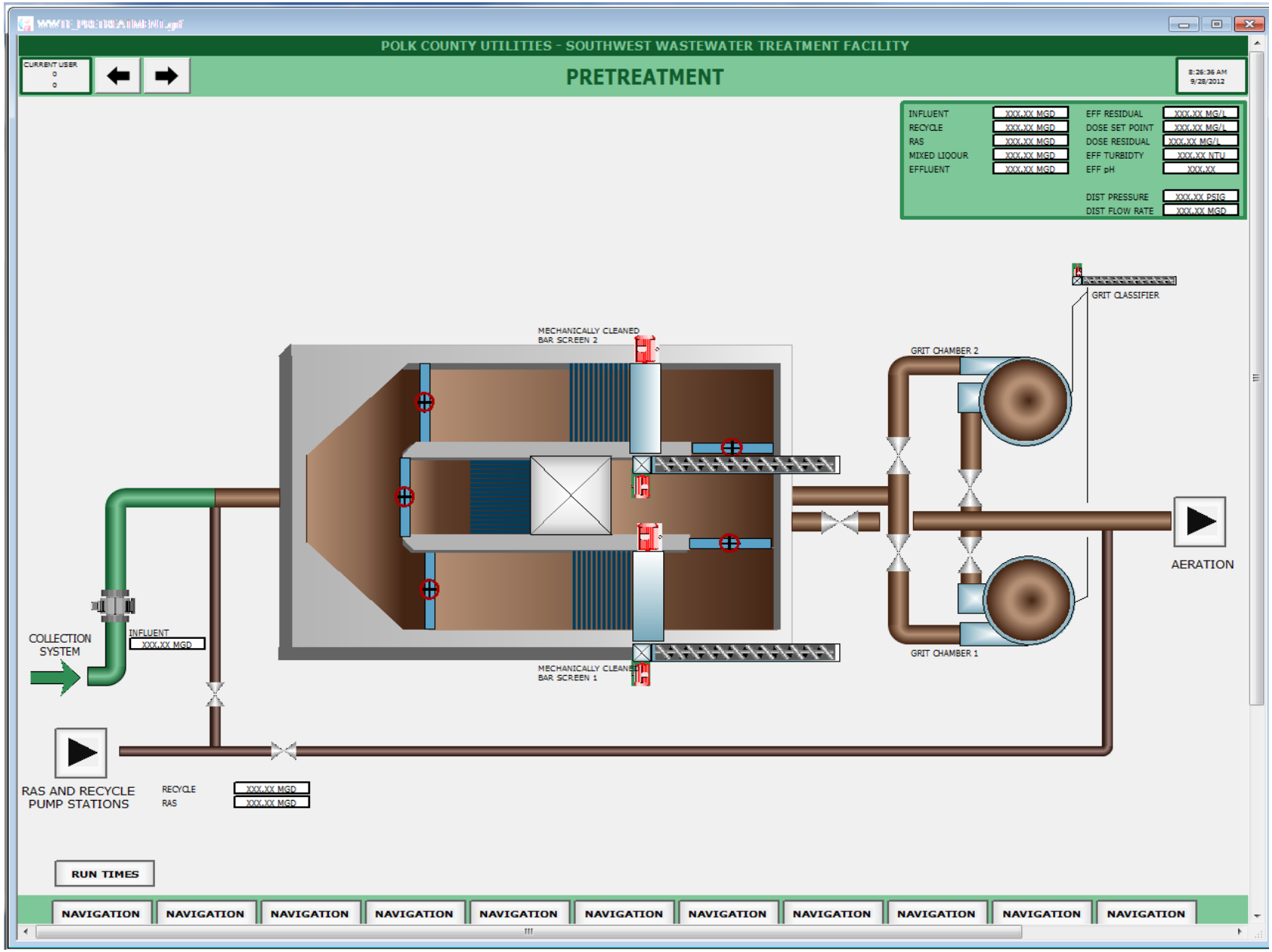
POLK COUNTY UTILITIES - SOUTHWEST WASTEWATER TREATMENT FACILITY
CURRENT USER
PRETREATMENT
INFLUENT XXX.XX MGD
RECYCLE XXX.XX MGD
RAS XXX.XX MGD
MIXED LIQOUR XXX.XX MGD
EFFLUENT XXX.XX MGD
EFF RESIDUAL XXX.XX MG/L
DOSE SET POINT XXX.XX MG/L
DOSE RESIDUAL XXX.XX MG/L
EFF TURBIDTY XXX.XX NTU
EFF pH XXX.XX
DIST PRESSURE XXX.XX PSIG
DIST FLOW RATE XXX.XX MGD
GRIT CLASSIFIER
MECHANICALLY CLEANED BAR SCREEN 2
GRIT CHAMBER 2
AERATION
COLLECTION SYSTEM
INFLUENT XXX.XX MGD
MECHANICALLY CLEANED BAR SCREEN 1
GRIT CHAMBER 1
RAS AND RECYCLE PUMP STATIONS
RECYCLE XXX.XX MGD
RAS XXX.XX MGD
RUN TIMES
NAVIGATION

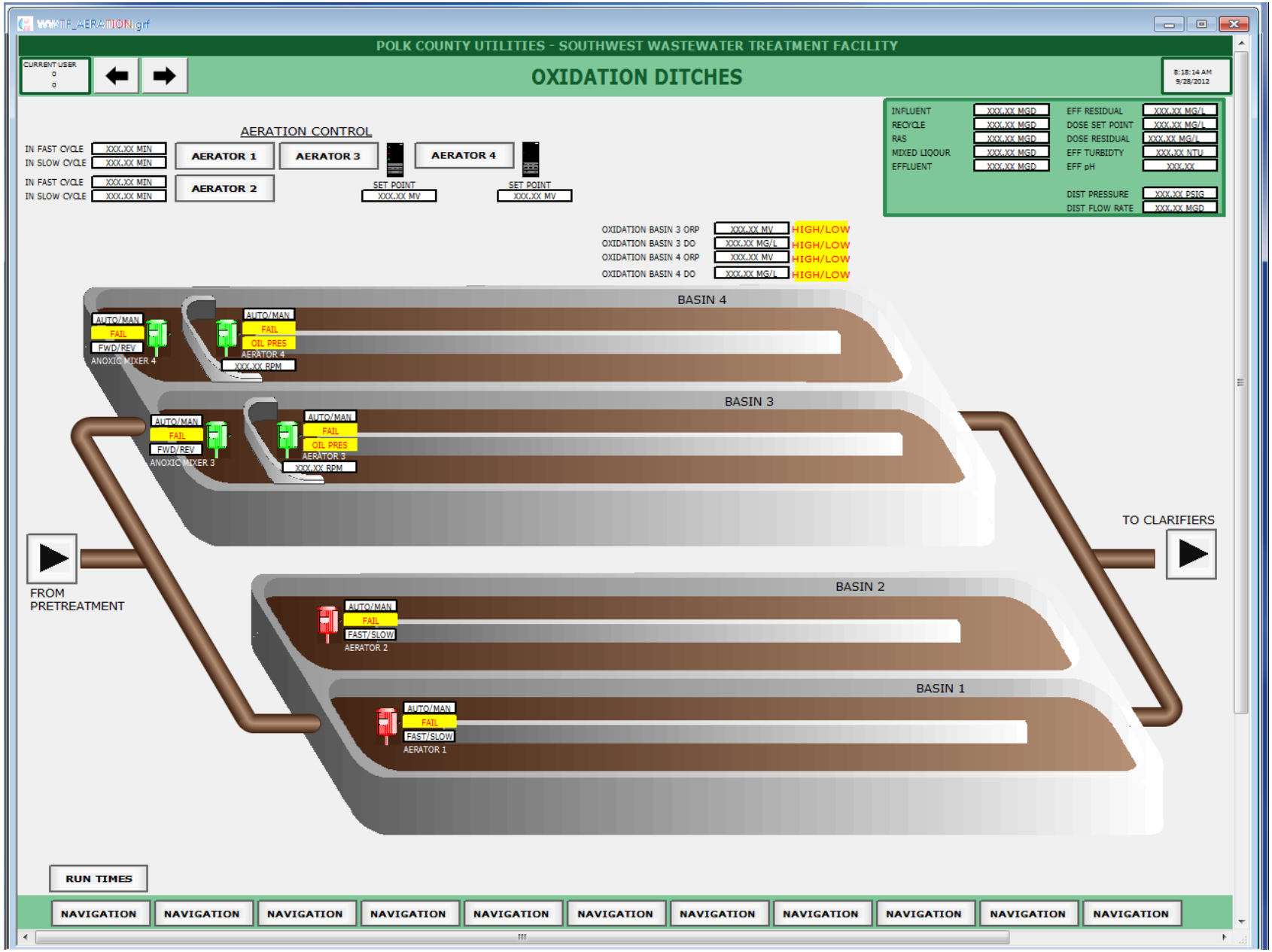
WWTF_AERATION.grf
POLK COUNTY UTILITIES - SOUTHWEST WASTEWATER TREATMENT FACILITY
CURRENT USER
OXIDATION DITCHES
8:18:14 AM
9/28/2012
AERATION CONTROL
IN FAST CYCLE
IN SLOW CYCLE
XXX.XX MIN
AERATOR 1
AERATOR 3
AERATOR 4
AERATOR 2
SET POINT
XXX.XX MV
INFLUENT
RECYCLE
RAS
MIXED LIQOUR
EFFLUENT
XXX.XX MGD
EFF RESIDUAL
DOSE SET POINT
DOSE RESIDUAL
EFF TURBIDTY
EFF pH
XXX.XX MG/L
XXX.XX NTU
XXX.XX
DIST PRESSURE
DIST FLOW RATE
XXX.XX PSIG
OXIDATION BASIN 3 ORP
OXIDATION BASIN 3 DO
OXIDATION BASIN 4 ORP
OXIDATION BASIN 4 DO
HIGH/LOW
BASIN 4
BASIN 3
BASIN 2
BASIN 1
AUTO/MAN
FAIL
FWD/REV
ANOXIC MIXER 4
OIL PRES
AERATOR 4
XXX.XX RPM
ANOXIC MIXER 3
AERATOR 3
FAST/SLOW
AERATOR 2
AERATOR 1
FROM
PRETREATMENT
TO CLARIFIERS
RUN TIMES
NAVIGATION

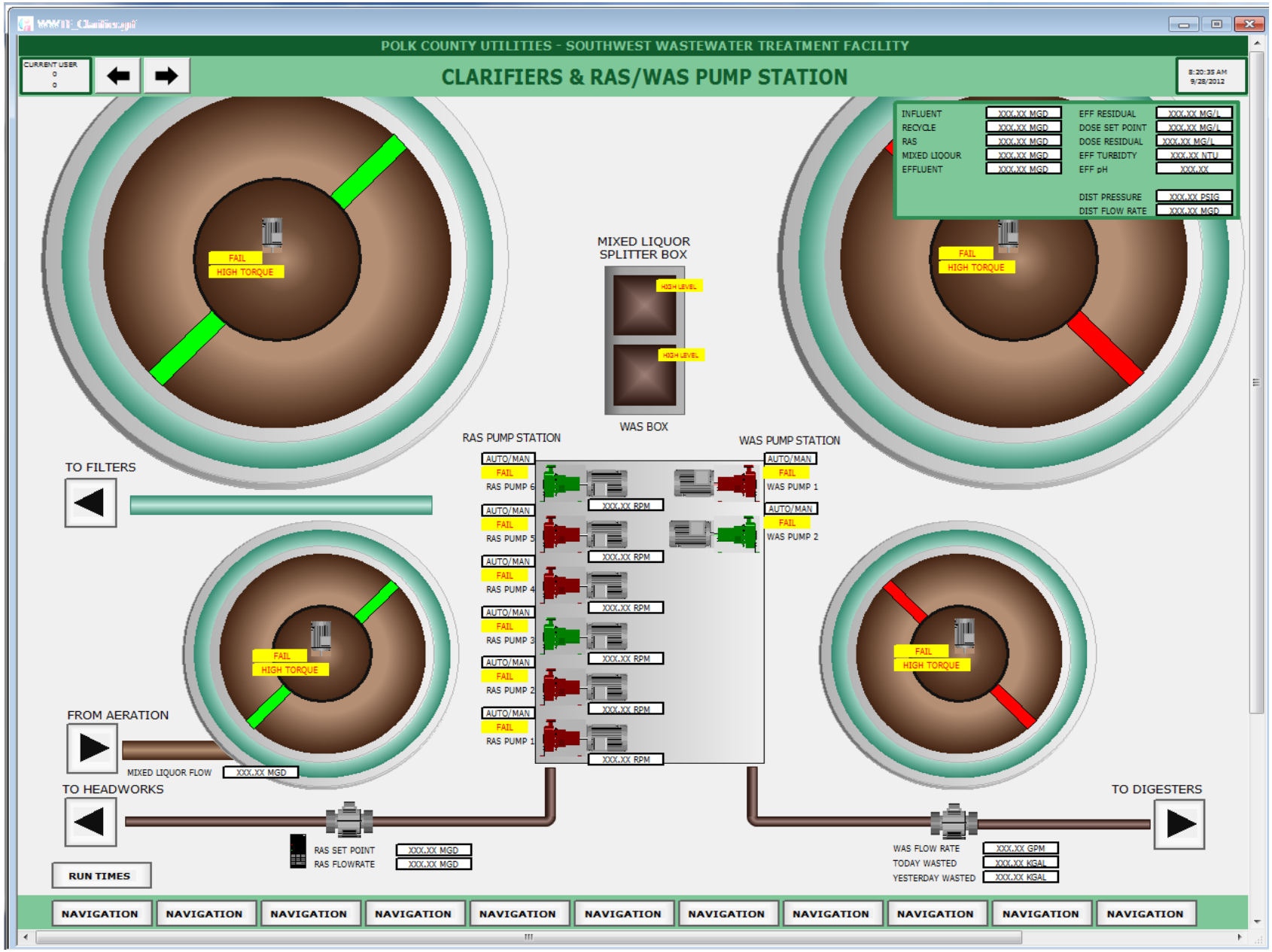
POLK COUNTY UTILITIES - SOUTHWEST WASTEWATER TREATMENT FACILITY
CLARIFIERS & RAS/WAS PUMP STATION
CURRENT USER
8:20:35 AM
9/28/2012
INFLUENT
RECYCLE
RAS
MIXED LIQOUR
EFFLUENT
EFF RESIDUAL
DOSE SET POINT
DOSE RESIDUAL
EFF TURBIDTY
EFF pH
DIST PRESSURE
DIST FLOW RATE
FAIL
HIGH TORQUE
MIXED LIQUOR SPLITTER BOX
HIGH LEVEL
WAS BOX
RAS PUMP STATION
WAS PUMP STATION
AUTO/MAN
FAIL
RAS PUMP 6
RAS PUMP 5
RAS PUMP 4
RAS PUMP 3
RAS PUMP 2
RAS PUMP 1
WAS PUMP 1
WAS PUMP 2
XXX.XX RPM
TO FILTERS
FROM AERATION
MIXED LIQUOR FLOW
XXX.XX MGD
TO HEADWORKS
RAS SET POINT
RAS FLOWRATE
TO DIGESTERS
WAS FLOW RATE
XXX.XX GPM
TODAY WASTED
XXX.XX KGAL
YESTERDAY WASTED
RUN TIMES
NAVIGATION

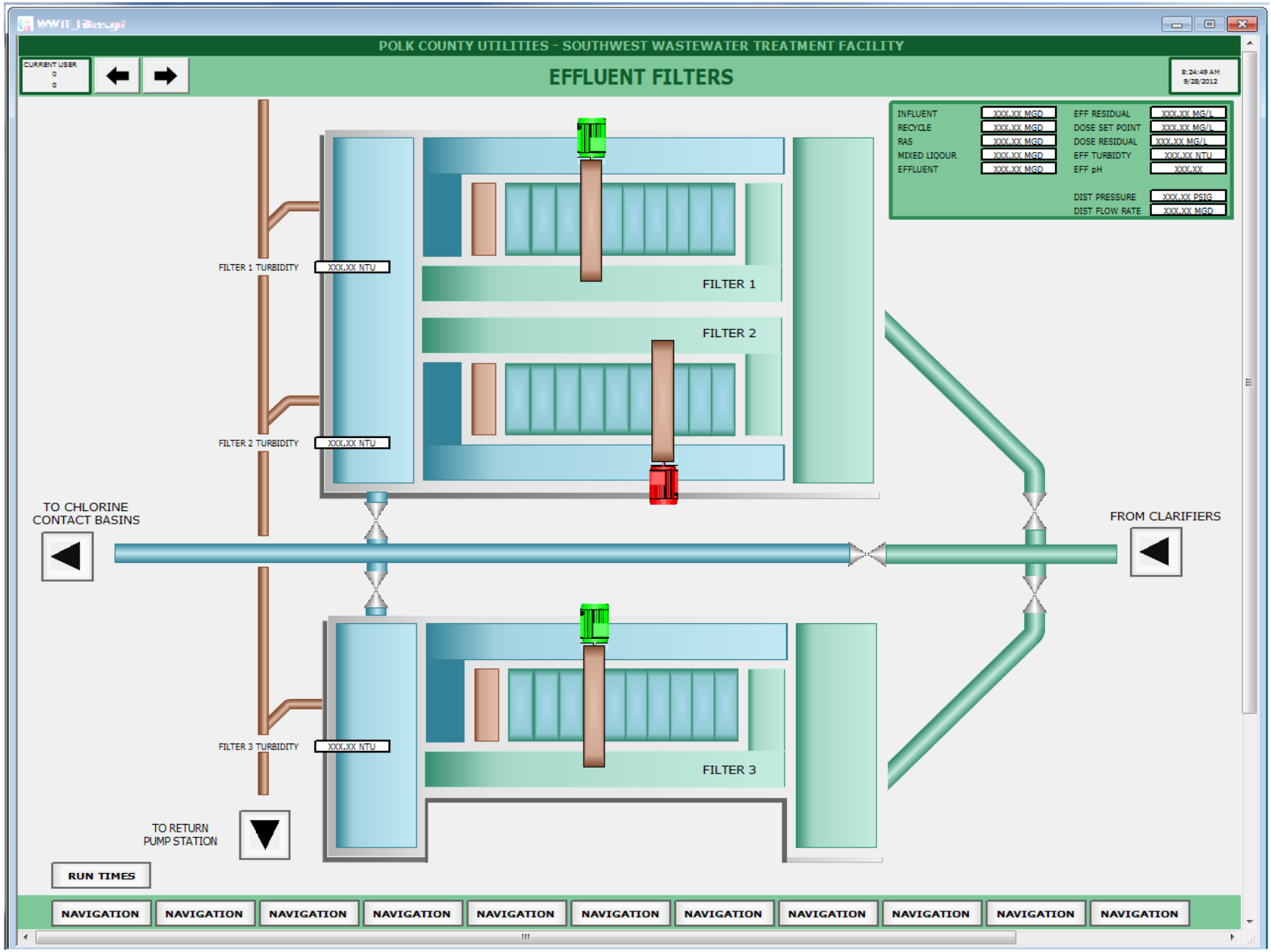
POLK COUNTY UTILITIES - SOUTHWEST WASTEWATER TREATMENT FACILITY
CURRENT USER
EFFLUENT FILTERS
8:24:49 AM
9/28/2012
INFLUENT XXX.XX MGD
RECYCLE XXX.XX MGD
RAS XXX.XX MGD
MIXED LIQOUR XXX.XX MGD
EFFLUENT XXX.XX MGD
EFF RESIDUAL XXX.XX MG/L
DOSE SET POINT XXX.XX MG/L
DOSE RESIDUAL XXX.XX MG/L
EFF TURBIDTY XXX.XX NTU
EFF pH XXX.XX
DIST PRESSURE XXX.XX PSIG
DIST FLOW RATE XXX.XX MGD
FILTER 1 TURBIDITY XXX.XX NTU
FILTER 2 TURBIDITY XXX.XX NTU
FILTER 3 TURBIDITY XXX.XX NTU
FILTER 1
FILTER 2
FILTER 3
TO CHLORINE CONTACT BASINS
FROM CLARIFIERS
TO RETURN PUMP STATION
RUN TIMES
NAVIGATION

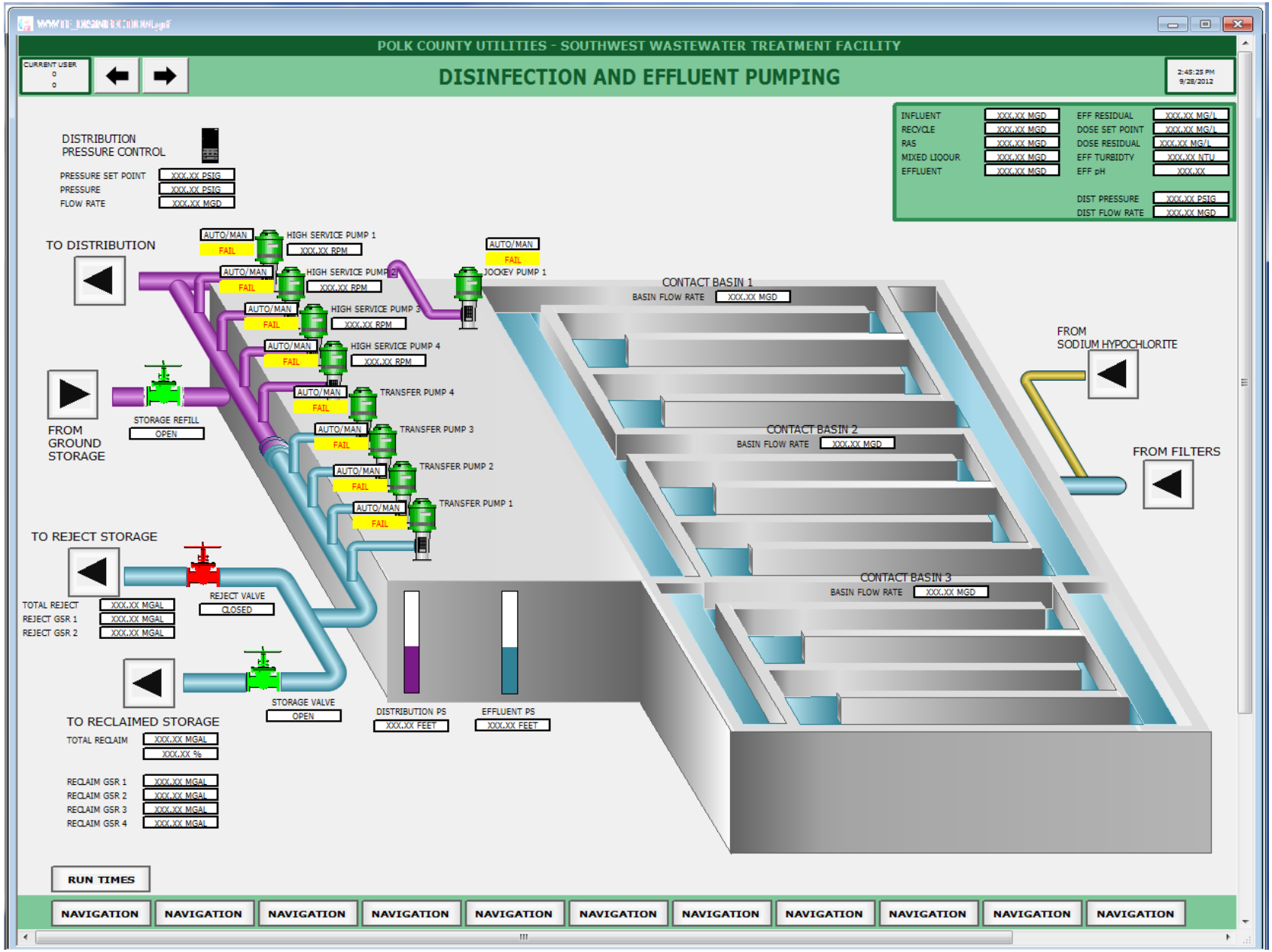
POLK COUNTY UTILITIES - SOUTHWEST WASTEWATER TREATMENT FACILITY
DISINFECTION AND EFFLUENT PUMPING
CURRENT USER
2:45:25 PM
9/28/2012
DISTRIBUTION PRESSURE CONTROL
PRESSURE SET POINT
PRESSURE
FLOW RATE
INFLUENT
RECYCLE
RAS
MIXED LIQOUR
EFFLUENT
EFF RESIDUAL
DOSE SET POINT
DOSE RESIDUAL
EFF TURBIDTY
EFF pH
DIST PRESSURE
DIST FLOW RATE
TO DISTRIBUTION
HIGH SERVICE PUMP 1
HIGH SERVICE PUMP 2
HIGH SERVICE PUMP 3
HIGH SERVICE PUMP 4
JOCKEY PUMP 1
TRANSFER PUMP 4
TRANSFER PUMP 3
TRANSFER PUMP 2
TRANSFER PUMP 1
AUTO/MAN
FAIL
FROM GROUND STORAGE
STORAGE REFILL
OPEN
CONTACT BASIN 1
BASIN FLOW RATE
CONTACT BASIN 2
CONTACT BASIN 3
FROM SODIUM HYPOCHLORITE
FROM FILTERS
TO REJECT STORAGE
TOTAL REJECT
REJECT GSR 1
REJECT GSR 2
REJECT VALVE
CLOSED
STORAGE VALVE
OPEN
DISTRIBUTION PS
EFFLUENT PS
TO RECLAIMED STORAGE
TOTAL RECLAIM
RECLAIM GSR 1
RECLAIM GSR 2
RECLAIM GSR 3
RECLAIM GSR 4
RUN TIMES
NAVIGATION

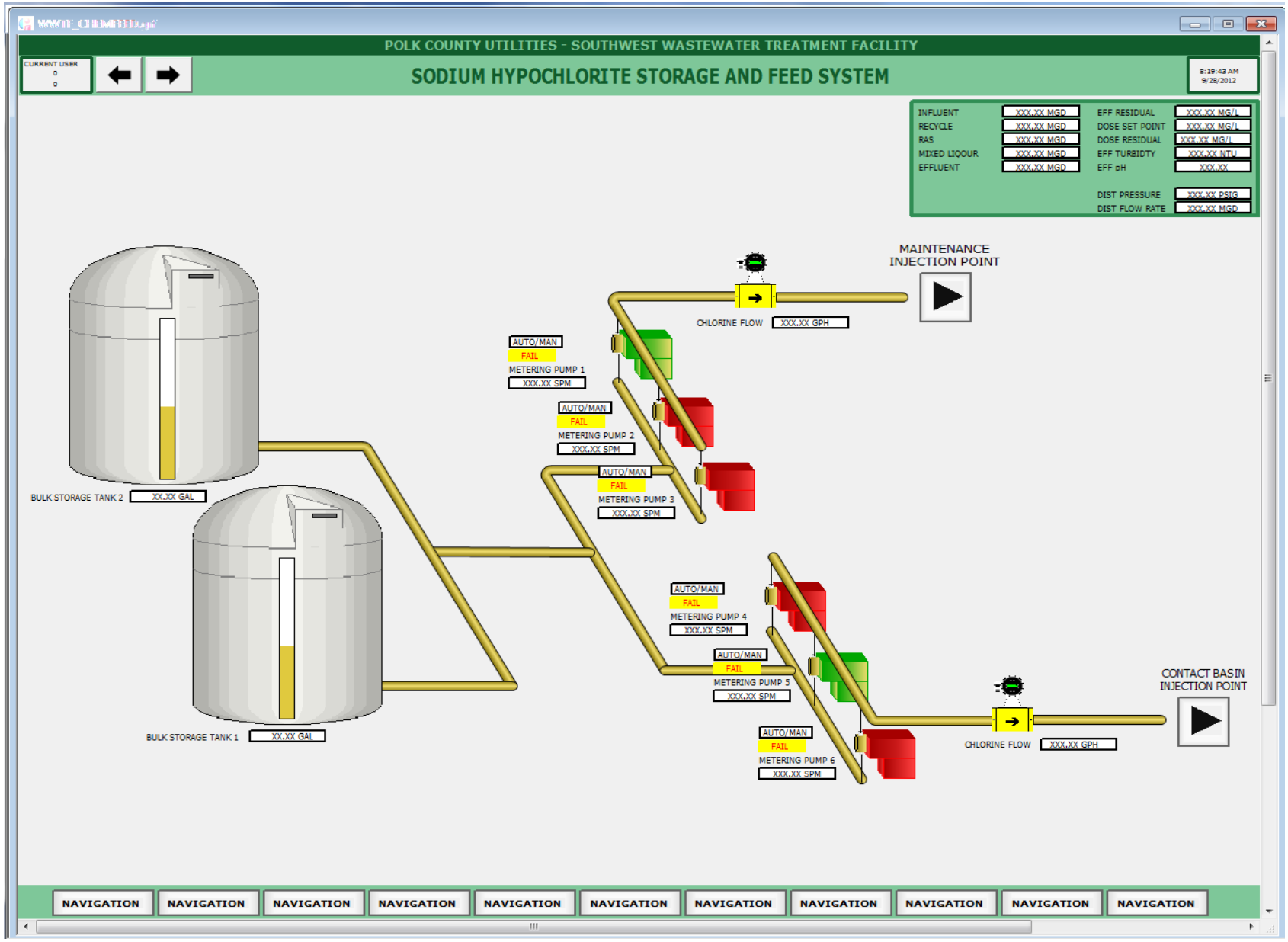
POLK COUNTY UTILITIES - SOUTHWEST WASTEWATER TREATMENT FACILITY
SODIUM HYPOCHLORITE STORAGE AND FEED SYSTEM
CURRENT USER
8:19:43 AM
9/28/2012
INFLUENT XXX.XX MGD
RECYCLE XXX.XX MGD
RAS XXX.XX MGD
MIXED LIQOUR XXX.XX MGD
EFFLUENT XXX.XX MGD
EFF RESIDUAL XXX.XX MG/L
DOSE SET POINT XXX.XX MG/L
DOSE RESIDUAL XXX.XX MG/L
EFF TURBIDTY XXX.XX NTU
EFF pH XXX.XX
DIST PRESSURE XXX.XX PSIG
DIST FLOW RATE XXX.XX MGD
MAINTENANCE INJECTION POINT
CHLORINE FLOW XXX.XX GPH
AUTO/MAN
FAIL
METERING PUMP 1
XXX.XX SPM
METERING PUMP 2
XXX.XX SPM
METERING PUMP 3
XXX.XX SPM
METERING PUMP 4
XXX.XX SPM
METERING PUMP 5
XXX.XX SPM
METERING PUMP 6
XXX.XX SPM
BULK STORAGE TANK 2
XX.XX GAL
BULK STORAGE TANK 1
XX.XX GAL
CONTACT BASIN INJECTION POINT
CHLORINE FLOW XXX.XX GPH
NAVIGATION

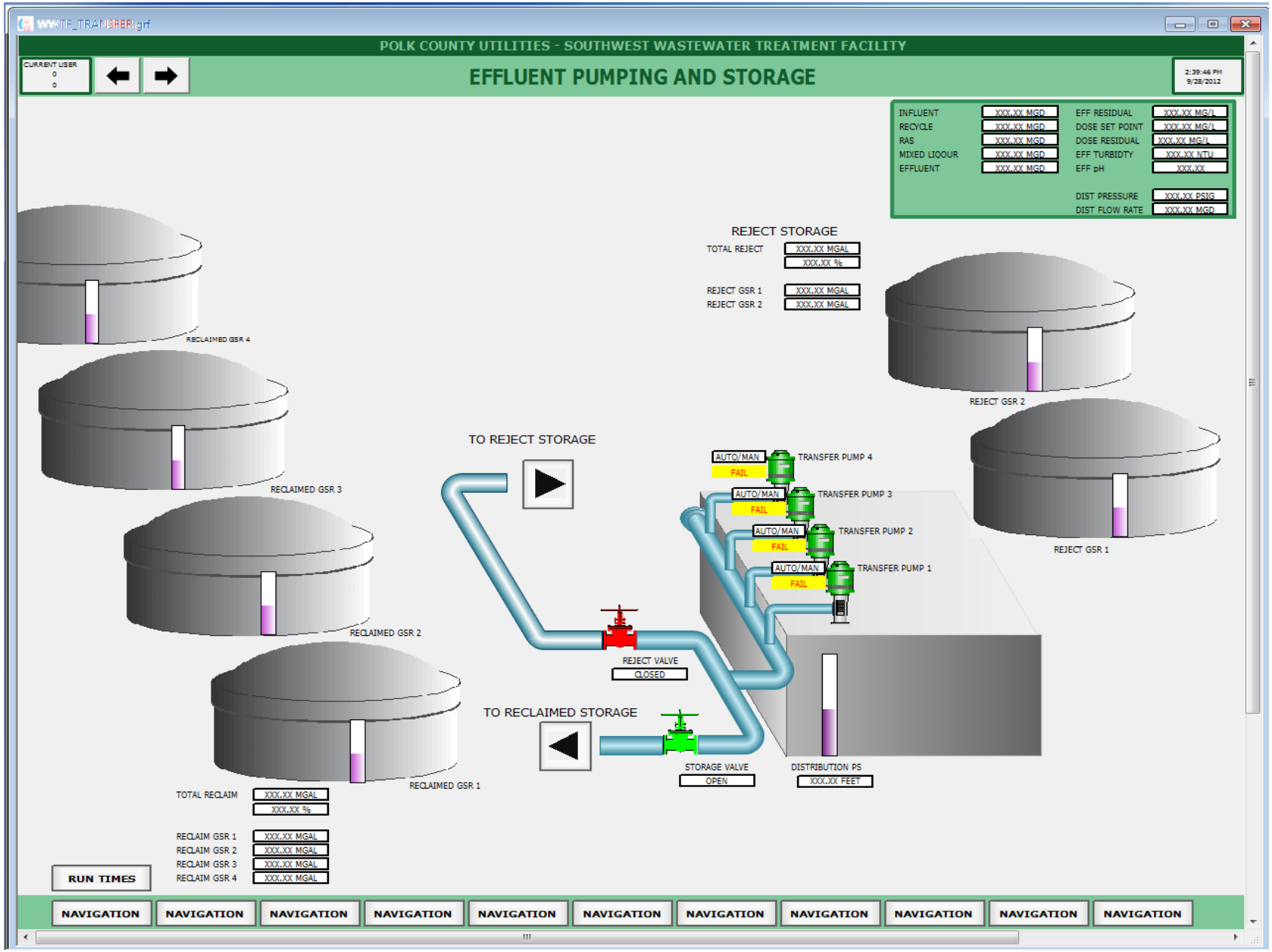
WWTF_TRANSFER.grf
POLK COUNTY UTILITIES - SOUTHWEST WASTEWATER TREATMENT FACILITY
CURRENT USER
0
0
EFFLUENT PUMPING AND STORAGE
2:39:46 PM
9/28/2012
INFLUENT XXX.XX MGD
RECYCLE XXX.XX MGD
RAS XXX.XX MGD
MIXED LIQOUR XXX.XX MGD
EFFLUENT XXX.XX MGD
EFF RESIDUAL XXX.XX MG/L
DOSE SET POINT XXX.XX MG/L
DOSE RESIDUAL XXX.XX MG/L
EFF TURBIDTY XXX.XX NTU
EFF pH XXX.XX
DIST PRESSURE XXX.XX PSIG
DIST FLOW RATE XXX.XX MGD
REJECT STORAGE
TOTAL REJECT XXX.XX MGAL
XXX.XX %
REJECT GSR 1 XXX.XX MGAL
REJECT GSR 2 XXX.XX MGAL
RECLAIMED GSR 4
RECLAIMED GSR 3
RECLAIMED GSR 2
RECLAIMED GSR 1
REJECT GSR 2
REJECT GSR 1
TO REJECT STORAGE
AUTO/MAN
FAIL
TRANSFER PUMP 4
TRANSFER PUMP 3
TRANSFER PUMP 2
TRANSFER PUMP 1
REJECT VALVE
CLOSED
TO RECLAIMED STORAGE
STORAGE VALVE
OPEN
DISTRIBUTION PS
XXX.XX FEET
TOTAL RECLAIM XXX.XX MGAL
XXX.XX %
RECLAIM GSR 1 XXX.XX MGAL
RECLAIM GSR 2 XXX.XX MGAL
RECLAIM GSR 3 XXX.XX MGAL
RECLAIM GSR 4 XXX.XX MGAL
RUN TIMES
NAVIGATION
NAVIGATION
NAVIGATION
NAVIGATION
NAVIGATION
NAVIGATION
NAVIGATION
NAVIGATION
NAVIGATION
NAVIGATION
NAVIGATION

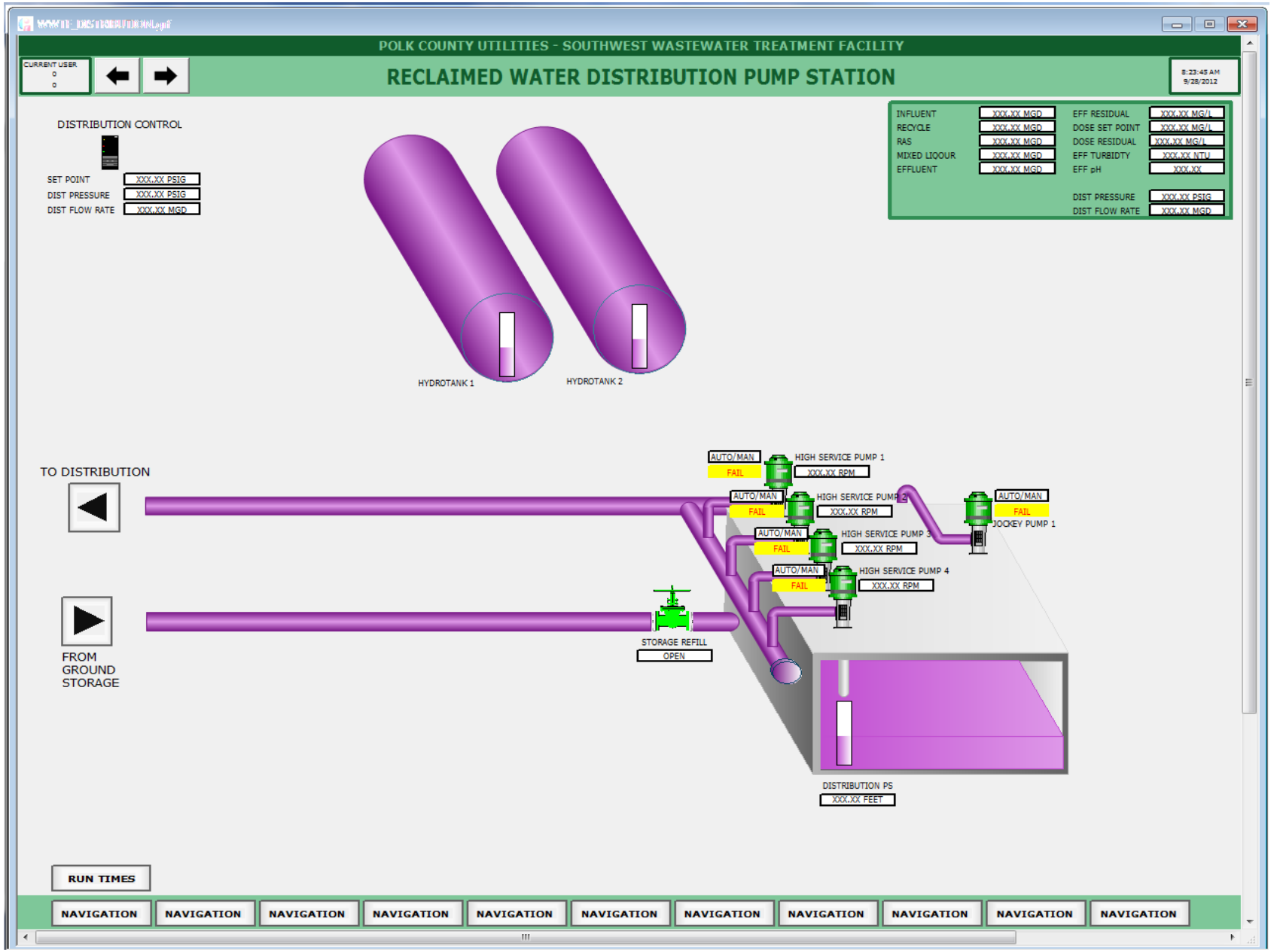
POLK COUNTY UTILITIES - SOUTHWEST WASTEWATER TREATMENT FACILITY
CURRENT USER
RECLAIMED WATER DISTRIBUTION PUMP STATION
8:23:45 AM
9/28/2012
DISTRIBUTION CONTROL
SET POINT
XXX.XX PSIG
DIST PRESSURE
XXX.XX PSIG
DIST FLOW RATE
XXX.XX MGD
INFLUENT
XXX.XX MGD
RECYCLE
XXX.XX MGD
RAS
XXX.XX MGD
MIXED LIQOUR
XXX.XX MGD
EFFLUENT
XXX.XX MGD
EFF RESIDUAL
XXX.XX MG/L
DOSE SET POINT
XXX.XX MG/L
DOSE RESIDUAL
XXX.XX MG/L
EFF TURBIDTY
XXX.XX NTU
EFF pH
XXX.XX
DIST PRESSURE
XXX.XX PSIG
DIST FLOW RATE
XXX.XX MGD
HYDROTANK 1
HYDROTANK 2
TO DISTRIBUTION
FROM GROUND STORAGE
AUTO/MAN
FAIL
HIGH SERVICE PUMP 1
XXX.XX RPM
HIGH SERVICE PUMP 2
HIGH SERVICE PUMP 3
HIGH SERVICE PUMP 4
JOCKEY PUMP 1
STORAGE REFILL
OPEN
DISTRIBUTION PS
XXX.XX FEET
RUN TIMES
NAVIGATION

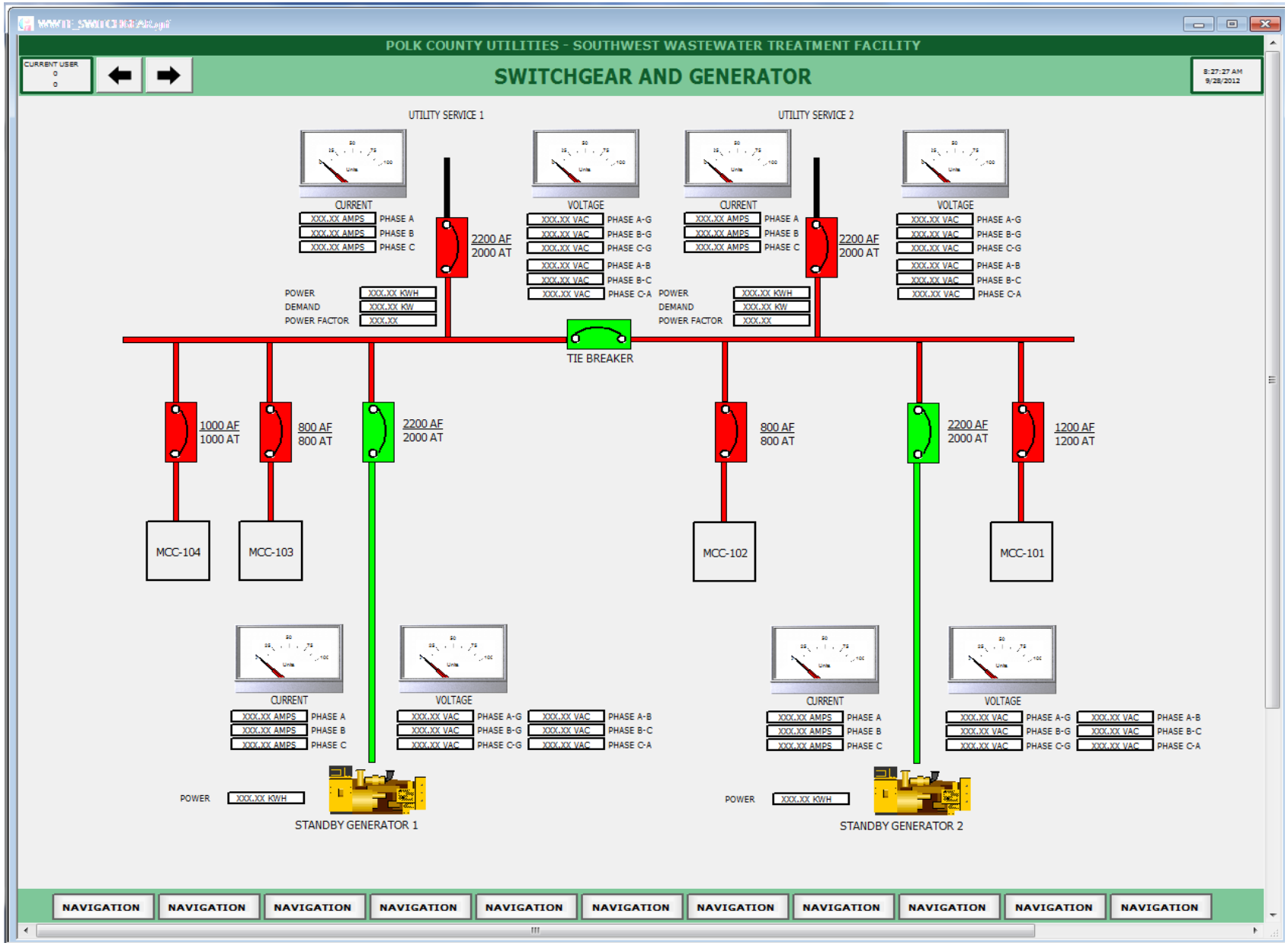
POLK COUNTY UTILITIES - SOUTHWEST WASTEWATER TREATMENT FACILITY
CURRENT USER
SWITCHGEAR AND GENERATOR
8:27:27 AM
9/28/2012
UTILITY SERVICE 1
UTILITY SERVICE 2
CURRENT
VOLTAGE
XXX.XX AMPS
PHASE A
PHASE B
PHASE C
XXX.XX VAC
PHASE A-G
PHASE B-G
PHASE C-G
PHASE A-B
PHASE B-C
PHASE C-A
2200 AF
2000 AT
POWER
DEMAND
POWER FACTOR
XXX.XX KWH
XXX.XX KW
XXX.XX
TIE BREAKER
1000 AF
1000 AT
800 AF
800 AT
1200 AF
1200 AT
MCC-104
MCC-103
MCC-102
MCC-101
STANDBY GENERATOR 1
STANDBY GENERATOR 2
NAVIGATION

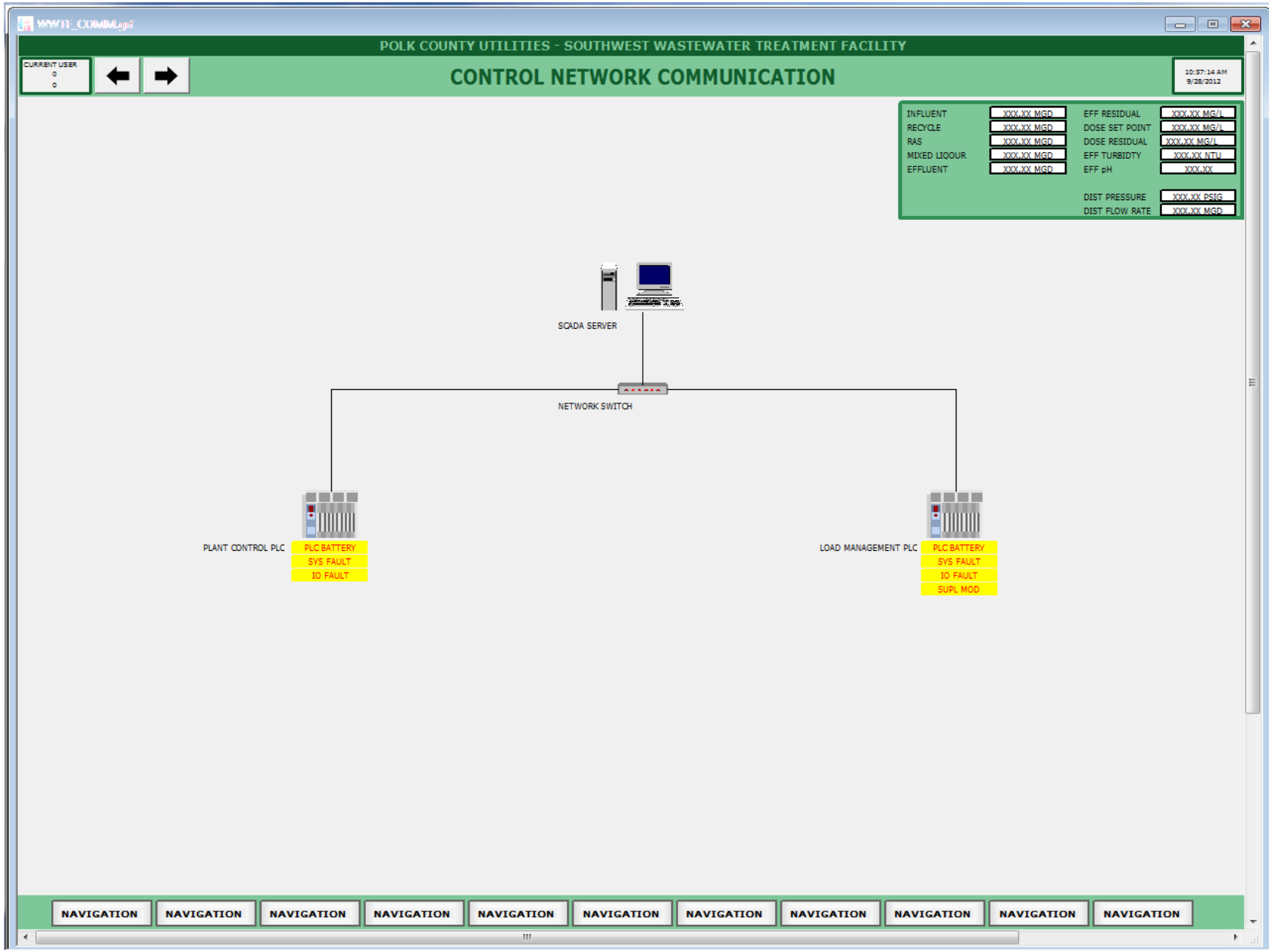
POLK COUNTY UTILITIES - SOUTHWEST WASTEWATER TREATMENT FACILITY
CURRENT USER
0
0
CONTROL NETWORK COMMUNICATION
10:57:14 AM
9/28/2012
INFLUENT
XXX.XX MGD
RECYCLE
XXX.XX MGD
RAS
XXX.XX MGD
MIXED LIQOUR
XXX.XX MGD
EFFLUENT
XXX.XX MGD
EFF RESIDUAL
XXX.XX MG/L
DOSE SET POINT
XXX.XX MG/L
DOSE RESIDUAL
XXX.XX MG/L
EFF TURBIDTY
XXX.XX NTU
EFF pH
XXX.XX
DIST PRESSURE
XXX.XX PSIG
DIST FLOW RATE
XXX.XX MGD
SCADA SERVER
NETWORK SWITCH
PLANT CONTROL PLC
PLC BATTERY
SYS FAULT
IO FAULT
LOAD MANAGEMENT PLC
PLC BATTERY
SYS FAULT
IO FAULT
SUPL MOD
NAVIGATION
NAVIGATION
NAVIGATION
NAVIGATION
NAVIGATION
NAVIGATION
NAVIGATION
NAVIGATION
NAVIGATION
NAVIGATION
NAVIGATION

WW-01-1 Precast Concrete Manhole (Typical)
WW-01-2 Doghouse Concrete Manhole Connection
WW-02 Manhole Connection
WW-03-1 Standard Manhole Frame and Cover Set
WW-03-2 Large Manhole Frame and Cover Set
WW-04 Manhole in Non-Paved Area
WW-05-1 Service Lateral (Standard) (Typical)
WW-05-2 Service Lateral (Deep) (Typical)
WW-06-1 Force Main to Gravity Sewer Manhole Connection (Typical)
WW-06-2 Force Main Manifold Connection (Typical)
WW-07 Grease Interceptor (Typical)
WW-08 Lint / Hair Trap Interceptor (Typical)
WW-09 Lift Station Notes
WW-10 Lift Station Notes (Continued)
WW-11 Duplex Lift Station (Typical) - Site Plan
WW-12-1 Duplex Lift Station with Valve Vault - Plan View
WW-12-2 Duplex Lift Station with Valve Vault - Section View
WW-12-3 Triplex Lift Station - Dimensions and Elevations Table
WW-13 Triplex Lift Station (Typical) - Site Plan
WW-14-1 Triplex Lift Station - Plan View
WW-14-2 Duplex or Triplex Lift Station (Above Ground Piping) - Section View
WW-14-3 Triplex Lift Station - Dimensions and Elevations Table
WW-15 Pipe Support and Gauge/Diaphragm Assembly (Typical)
WW-16 Chain Link Fence (Typical)
WW-17-1 Lift Station Wall (Typical) - Section View
WW-17-2 Cantilever Swing Gate (Typical)
WW-18 Lift Station Wash Down Assembly (Typical)
WW-19 THIS PAGE IS INTENTIONALLY BLANK
WW-20-1 Lift Station Control Panel - Front View
WW-20-2 Lift Station Control Panel - Rear View
WW-21 THIS PAGE IS INTENTIONALLY BLANK
WW-22 Electrical Legend
WW-23 Duplex Pump Control Schematic (240V/480V)
WW-24 Duplex Pump Control Panel Enclosure - Dead Front Layout (Typical)
WW-25 Lift Station TVSS Installation (Typical)
WW-26-1 Lift Station Grounding (Typical)
WW-26-2 Lift Station Cover and Door Grounding (Typical)
WW-26-3 Lift Station Ground Test Well
WW-26-4 Lift Station Fence Post Grounding (Typical)
WW-27 SCADA Pressure Sensor - Water Service

CHAPTER 5 WASTEWATER

Section 550-A Testing & Inspection for Acceptance December 2010

PART 1 - GENERAL

1.01 SCOPE OF WORK

A. These specifications cover the testing and inspection for acceptance of wastewater collection and transmission systems.

B. Requests for testing and acceptance of wastewater collection and transmission systems shall be executed in accordance with the Section entitled "Field Testing and Inspection Procedures".

C. Gravity Mains:

Mains shall be inspected with CCTV for alignment, grade variations, separated pipes, leaks, deflections, cracks, brakes, or otherwise defective pipe to ensure overall pipe integrity. The CCTV inspection contractor shall perform the CCTV inspection(s) at the CONTRACTOR's sole expense and submit the report(s) to PCU for review and consideration for approval**.** Should PCU so determine, all or part of the CCTV inspection shall be repeated at the sole expense of the CONTRACTOR.

D. Pressure Mains:

Hydrostatic tests shall be conducted for pressure pipes, joints and valves for allowable limits of pressure and leakage. Air testing of pressure pipes will not be permitted under any circumstance. All pressure mains shall be hydraulically cleaned with a polypropylene swab (pig) to remove dirt, sand, and debris from the main prior to hydrostatic testing.

PART 2 - GRAVITY MAIN CCTV INSPECTION

2.01 STANDARDS

A. Gravity mains shall be televised from manhole to manhole utilizing a 360-degree pan and tilt color camera. The camera shall be of the self-propelled tractor type with a measuring device mounted to the front capable of being read as the tractor moves and capable of accurately measuring depth of standing water up to, and including, three inches.

B. Closed Circuit Television (CCTV) data shall be recorded and submitted in digital format.

C. CCTV operators inputting the CCTV data shall be certified users who have successfully completed the Pipeline Assessment and Certification Program (PACP) user course from the National Association Sewer Service Companies (NASSCO).

D. CCTV operators shall be able to demonstrate proficiency in televising and recording using PACP codes, as required by PCU.

E. CCTV inspections shall use unique identification numbers established and provided by PCU in pipe segment reference, upstream manhole number and the downstream manhole number fields

F. Reports generated by the computer software shall be consistent with PACP requirements, observation report with still images; and CCTV inspection results with a pipe run graph.

2.02 PREPARATION

A. All manhole channels shall be constructed and coated (if applicable) prior to CCTV inspection.

B. The CONTRACTOR shall clean gravity mains to remove debris and remove stains prior to televising. Flushing water or debris will not be allowed to enter pump station wet wells. Water will be pumped from the sewer system during flushing to an acceptable discharge location. A visual inspection shall be made and all obstructions removed.

C. Mains that are dirty (dirty walls and/or debris in the inverts) shall be re-flushed and cleaned before rescheduling a CCTV inspection. If necessary, swabbing may be required of specific sections of pipe.

D. Dewatering system shall not be operated within 48 hours prior to CCTV inspection.

E. Backfill from the gravity main to the subgrade shall be compacted and stabilized for inspection and cleaning vehicle access prior to CCTV.

F. Inverts will be constructed in manholes prior to televising.

2.03 EXECUTION

A. Wherever possible, gravity mains shall be televised in the downstream direction.

B. Sufficient water shall be run through each section of main until water runs through each downstream manhole no more than 48 hours prior to televising. Lines that are dry or that enough water has not run through to reach the end of each section shall not be televised.

C. The sewer line shall be inspected manhole to manhole with a crawler and pan and tilt camera driven through at a moderate rate of speed.

D. Lighting should be set to allow for clear visibility without excessive reflection and should allow realistic colors to be visible.

E. The iris of the camera should be adjusted to allow for a sharp focused image and the lens should be kept clean and free of obstructions.

F. The operator should follow the manufacturer's instructions to achieve the proper color correction.

G. All notes or coded references shall have footages recorded with them

H. The camera should be centered within the pipe.

I. The distance between manhole centers shall be accurate within 1 percent.

J. The camera shall be stopped at all laterals adjusted for a clear picture and an orbital scan of the lateral taken pausing at the invert at the service lateral to detect dirt or infiltration.

K. The camera shall also be stopped at any suspected or confirmed defects, the focus properly adjusted and a clear digital video taken.

L. Areas suspected of leaking shall be paused long enough to determine if a leak exists currently or if deposits have occurred.

M. A digital photo shall be taken of all areas noted on the report including laterals and any confirmed or suspected defects.

N. Manholes shall be measured from rim to invert and the depth recorded on the inspection header.

O. Manhole material and defects shall be noted.

PART 3 - GRAVITY MAIN TESTING

3.01 LEAKAGE TESTING

A. The CONTRACTOR, with PCU representation present, shall perform leakage testing. The CONTRACTOR shall be responsible for furnishing all necessary labor and equipment to conduct such testing.

Leakage tests shall be by the low-pressure air test. Each test section shall not exceed 400 feet in length and shall be tested between adjacent manholes. Leakage testing shall be conducted in accordance with the procedure for "Recommended Practice for Low Pressure Air Testing of Installed Sewer Pipe" as established by the Uni-Bell PVC Pipe Association. The pipe shall pass the current most stringent UNI-B-6 Uni-Bell standards for testing gravity sewers and shall have no evidence of leaks in the pipe or connections.

Low-pressure Air Test Procedure:

1. Isolate each section of the gravity wastewater main to be tested between manholes using inflatable air plugs that are securely placed at the ends of the section of the main to be tested.
2. Introduce air pressure slowly to approximately 4 psig.
3. Determine groundwater elevation above the spring line of the pipe. For every foot of groundwater above the spring line of the pipe, increase the starting air test pressure by 0.43 psig. Do not increase the pressure above 10 psig.
4. Allow the pressure to stabilize for at least five minutes. Adjust the pressure to 3.5 psig or increase the test pressure as determined above when groundwater is present.
5. Start the test.
6. Determine the test duration for each sewer section with a single pipe size from the following table. Do not make allowance for laterals.

Table 550-A-1. Allowable Leakage - Low Pressure Air Test

Nominal Pipe Size (inches)	Minimum Test Time (min/ 100 feet)
8	1.2
10	1.5
12	1.8
15	2.1
18	2.4
21	3.0
24	3.6
27	4.2
30	4.8
36	6.0

7. Record the drop in pressure during the test period. If the air pressure has dropped more than 1.0 psig during the test period, the section of main being tested has failed. Otherwise, the section of main being tested has passed.
8. When a section of main fails the test, the CONTRACTOR shall determine the source of the air leakage, make the appropriate corrections, and retest. If necessary, testing shall be conducted incrementally by individual pipe sections until all leaks are isolated. After all leaks are repaired, the CONTRACTOR shall retest the entire section of the main between manholes.
9. All testing results, including the quantity of acceptable leakage, shall be documented and certified using the PCU approved Low Pressure Air Test Form.

3.02 CAUSES FOR REJECTION OF GRAVITY MAINS

A. The CONTRACTOR shall be required to replace the pipeline if the acceptance or bond CCTV inspection reveals cracked, broken, or defective pipe, and/or in the case of PVC pipe a ring deflection in excess of five percent.

B. After backfilling of trenches, all PVC sewer pipe shall be tested by the CONTRACTOR for initial diametric deflections by the use of a Go-No-Go type mandrel which is acceptable to PCU. The initial diametric deflection shall not exceed five percent (5%) of the base inside diameter as defined by ASTM D-3034.

C. Joint separation shall be no greater than two inch between the spigot and bell of the pipe.

D. No evidence of leakage will be acceptable for private gravity mains connecting to the PCU collection system.

E. The following NASSCO PACP codes or notes shall be cause for rejection of gravity

sewer systems

1. PACP coding of "Line" (L) shall be accompanied by a measurement of the line, grade or angular deviation. Variance of established line and grade at any point along the length of the pipe shall not be greater than 1-1/2 inches, provided such variation does not result in a level or reverse sloping invert. An approved method shall be used to determine this deviation. A PACP coding of MWLS with a percentage of pipe greater than 18.75% on 8-inch sewer, 15% on 10-inch sewer etc. will be corrected by excavation and repair.
2. PACP coding of "Infiltration" (I) for pipe joints shall be replaced or the pipe joint shall be reseated at the joint. Grouting shall not be considered a method of repair and will not be accepted. Replace the leaking gravity main segment if there is visible infiltration at any point other than the pipe joint.
3. Any PACP coding in the category of "Structural Family".
4. PVC pipe having ID tears will be rejected.
5. PACP condition grading of "OB" (obstruction) in pipe shall be rejected, the obstruction shall be removed and the line cleaned and re-televised.

3.03 ACCEPTANCE OF GRAVITY MAINS

A. Successful passage of both the leakage test and CCTV inspection is required before acceptance by PCU.

B. Prior to repair or replacement of failed sewer pipe, the method of repair or replacement shall be submitted to PCU for review and consideration for approval. Pressure grouting of pipe or manholes shall not be considered as an acceptable method of repair.

PART 4 - MANHOLE TESTING

4.01 TESTING AND INSPECTION OF MANHOLES

A. Leakage Test:

There shall be no visible leakage through the walls or pipe connections.

B. Vacuum Test:

All manholes shall be required to meet the requirements of the vacuum test as per the current ASTM C 1244 "Standard Test Method for Concrete Sewer Manholes by the Negative Air Pressure (Vacuum) Test" prior to acceptance.

ASTM C1244 states that a vacuum test is intended to be used as a preliminary test to enable the installer to demonstrate the condition of the concrete manhole prior to backfill.

ASTM C1244 requires that a vacuum of 10 inches Hg to be drawn on the manhole after all lift holes are plugged and pipes entering the manhole are temporarily plugged and securely braced. The time is measured for the vacuum to drop to 9 inches Hg. The

manhole is accepted if the measured time meets or exceeds the values presented in Table 550-A-2 below or Table 1 of ASTM C1244, whichever is more restrictive. If the manhole fails the initial test, it may be repaired by an approved method until a satisfactory test is obtained.

Table 550-A-2. Minimum Duration – Manhole Vacuum Test

Manhole Diameter (Feet)	Test Period (Seconds)
4	60
5	75
6	90

Vacuum testing after backfilling should be performed only after a successful non-backfill test has been completed in accordance with ASTM C1244.

Vacuum testing backfilled manhole systems is not recommended, especially in the presence of ground water as the hydrostatic pressure may exceed the design limits of critical flexible connectors leading to a system failure.

All testing shall be documented and certified using the PCU approved Vacuum Test Form.

C. Manhole Inspections:

1. The quality of all materials, the process of manufacture, and the finished sections shall be subject to inspection and approval by PCU. Such inspection may be made at the place of manufacture and/or at the site after delivery, or at both places. The sections shall be subject to rejection at any time on account of failure to meet any of the specification requirements; even though sample sections may have been accepted as satisfactory at the place of manufacture. Sections rejected after delivery to the job shall be marked for identification and shall be immediately removed from the job. All sections, which have been damaged, will be rejected. If already installed, rejected section shall be removed and replaced entirely at the CONTRACTOR’s expense.
2. At the time of inspection, the sections will be carefully examined for compliance with the specified ASTM designation, and with the approved manufacturer's drawings. All sections shall be inspected for general appearance, dimension, “scratch-strength” blisters, cracks, roughness, soundness, etc. The surface shall be dense and close-textured. Installed manholes shall be inspected for proper filling and coating of the lifting holes and proper installation of any liner, coating or shrink-wrap.

PART 5 TESTING OF WASTEWATER FORCE MAINS

A. Locating Wire System:

All wastewater force mains shall be installed with a continuous green insulated copper locating wire. Locating wire shall be installed in accordance with the STANDARD DRAWINGS and pass a continuity check with an approved tracing system before acceptance by PCU.

B. Inspection of Automatic Combination Air and Vacuum Release Valves:

After completion of the pressure test the ARV shutoff valve shall be opened and PCU shall test the ARV for proper connection and operation.

C. Inspection of Valves and Valve Boxes:

Valves shall be opened wide, then tightly closed, and the various nut and bolts shall be tested for tightness. Any valve that does not operate correctly shall be replaced. Buried valves shall have an operating nut within two feet of finished grade. Valve boxes shall be properly marked and checked for installation in accordance with the STANDARD DRAWINGS. Operating nuts, extensions, and upper guides shall not interfere with valve operation. Before acceptance by PCU valve boxes shall be adjusted to finished grade with the operating nut properly centered and shall have a "V" notched in the curb or street in the absence of a curb directly opposite the valve box.

D. Swabbing:

1. All mains shall be hydraulically cleaned with a polypropylene swabbing (also known as pigging) device to remove dirt, sand, and debris from main.
2. If swabbing access and egress points are not provided in the design drawings, it will be the responsibility of the CONTRACTOR to provide and remove temporary access and egress points for the cleaning, as required.
3. Passage of cleaning poly swabs through the system shall be constantly monitored, controlled, and all poly swabs entered into the system shall be individually marked and identified so that the exiting of the poly swabs from the system can be confirmed.
4. Cleaning of the system shall be done in conjunction with the initial filling of the system for its hydrostatic test.
5. The line to be cleaned shall only be connected to the existing distribution system at a single connection point.
6. The CONTRACTOR shall locate and open all new in-line valves beyond the point of connection on the pipeline to be cleaned during the swabbing operation.
7. At the receiver or exit point for the poly swab, the CONTRACTOR is responsible for creating a safe environment for collection of debris, water, and the swab. The CONTRACTOR shall provide for the protection of surrounding personnel and property and the safe retrieval of the swab.
8. Only PCU personnel shall operate the supply valve from the existing distribution system. Cleaning and flushing shall be accomplished by propelling the swab down

the pipeline to the exit point with potable water. Flushing shall continue until the water is completely clear and swab is retrieved.

i. Re-apply a series of individual swabs in varying diameters and/or densities as required, to attain proper cleanliness of pipeline.

ii. Swabbing speed shall range between two and five feet per second.

9. After the swabbing process, pressure testing and disinfection of the pipe shall be completed in accordance with this MANUAL.

E. Hydrostatic Pressure Testing of Ductile Iron and PVC Pressure Pipe:

1. Hydrostatic tests shall consist of pressure and leakage tests for non-butt welded jointed pipes. Air testing of pressure pipes will not be permitted under any circumstance. Testing shall be performed from in-line valve to in-line valve with a depressurized section behind each valve, whenever possible. Testing shall be performed from in-line valve to in-line valve with a depressurized section behind each valve, whenever possible.
2. The CONTRACTOR shall furnish all necessary testing material and equipment. PCU will monitor and approve a satisfactory test.
3. All pipe sections to be pressure tested shall be subjected to a hydrostatic pressure of ~~100~~ 150 psi. The duration of each pressure test shall be for a period of two hours. If during the test, the integrity of the tested line is in question, PCU may require a 6-hour pressure test. The basic provisions of AWWA C600 shall be applicable.
4. Procedure for Pressure Test:

   Each section of pipe to be tested, as determined by PCU, shall be slowly filled with water and the specified test pressure shall be applied by means of a pump connected to the pipe in a satisfactory manner. Before applying the specified test pressure, all air shall be expelled from the pipe. To accomplish this, taps shall be made and appropriate valves installed to ensure bleeding of all air from the main. If defective pipes, fittings or valves are discovered during this pressure test, all such items shall be removed and replaced by the CONTRACTOR with sound material and the test shall be repeated until satisfactory results are obtained. Provisions of the current AWWA C600, where applicable, shall apply.

F. Hydrostatic Pressure Testing of HDPE and Fusible PVC Pressure Pipe:

1. After installation, the butt welded jointed pipe shall be tested in accordance with this MANUAL with the following modifications:
   a. Test Duration: The total test time including initial pressurization, initial expansion, and time at test pressure, shall not exceed five hours. If the test is not completed due to leakage, equipment failure, etc., the test section shall be depressurized and allowed to “relax” for a minimum of eight hours before it is brought back up to test pressure. The test procedure consists of initial expansion phase and leakage test phase.
   b. Prior to Hydrostatic Pressure Testing Procedure:

1) Hydraulically clean the main to be tested with a polypropylene swab (pig) to remove dirt, sand, and debris from the main prior to hydrostatic testing.
2) Insure that main to be tested is restrained against horizontal and vertical movement. Exposing joints only is allowed.

c. Hydrostatic Pressure Testing Procedure:

1) Fill main slowly with water to remove air.
2) Pressurize up to 1.5 times the Pressure Class of the pipe used at the lowest point of the main being tested.
3) Maintain for 4 hours while adding water as needed in non-monitored amounts as pipe will expand while until pressure.
4) Reduce pressure by 10 psi and monitor for 1 hour.
5) Main passes if there are no leaks within 5 percent of the remaining pressure after reduction.

F. Hydrostatic Leakage Testing:

1. Procedure for Leakage Test:

After completion of the pressure test, a leakage test shall be conducted to determine the quantity of water lost by leakage under the specified test pressure. Applicable provisions of AWWA C600 shall apply.

a. Allowable leakage in gallons per hour for pipeline shall not be greater than that determined by the formula:

$$L = \frac{ND\,(P)^{1/2}}{7{,}400}$$

Note:
L - Allowable leakage in gallons per hour.
N - Number of joints in the tested line.
D - Nominal diameter of the pipe in inches.
P - Average test pressure during leakage test in pounds per square inch gauge.

b. Leakage is defined as the quantity of water to be supplied in the installed pipe or any valve section under test, which is necessary to maintain the specified leakage test pressure after the pipe has been filled with water and the air expelled. Should any test of pipe installed disclose leakage greater than that allowed, the CONTRACTOR shall locate and replace or repair the defective joints, pipe or valve until subsequent testing is within the specified leakage allowance.

F. All testing and the quantity of acceptable leakage shall be documented and certified using the PCU approved Pressure Test Form.

CHAPTER 5 WASTEWATER

Section 550-B Testing and Inspection for Acceptance (Lift Stations) December 2010

PART 1 - GENERAL

1.01 SCOPE OF WORK

A. This Section covers the testing and inspection for acceptance of wastewater lift stations.

B. Requests for testing and acceptance of wastewater lift stations shall be executed in accordance with the Section entitled "Field Testing and Inspection Procedures".

C. The final startup and final inspection shall demonstrate and ensure to PCU that the complete lift station system is fully operational in accordance with this MANUAL.

PART 2 - PRODUCTS (NOT USED)

PART 3 - EXECUTION

3.01 PREPARATION FOR TESTING

A. The CONTRACTOR shall install sufficient monitoring wells in the representative areas of the gravity system, acceptable to PCU, to determine the groundwater elevations. Monitoring wells shall be installed a minimum 24 hours prior to Section 3.02 testing.

3.02 TESTING AND INSPECTION OF WETWELLS

A. Leakage Test:

There shall be no visible leakage through the walls or pipe connections.

B. Wet Well Liner/Coating Testing:

All wet well surfaces with linings or coatings shall be tested with an acceptable electrical Holiday or flaw detector, if applicable, after installation and any imperfections discovered shall be repaired by a method approved by PCU. The CONTRACTOR shall provide all necessary equipment and material for testing. Liners and coatings requiring spark testing will be spark tested in accordance with NACE Standard RP-02-74. Test voltage equals 1250 multiplied by the square root of the coating thickness in mils (0.001 inch), or test voltage equals 250 multiplied by the square root of the coating material in microns (0.001 mm) this formula's results shall not exceed the dielectric strength of the material being tested.

3.03 FINAL LIFT STATION START-UP

A. The following shall occur prior to the Final Lift Station Start Up being conducted:

1. A successful Informal Lift Station Start Up of the lift station, its site, and improvements;
2. All wire checks completed;
3. Wastewater Collection System CCTV inspections has been successfully completed and reviewed by PCU;
4. FDEP Water Clearance received by PCU;
5. FDEP placard for fuel tank, if applicable, has been received and properly located

on the tank;

6. A "Lift Station Start-Up Form", as contained in this MANUAL, has been completed by the CONTRACTOR and received by PCU;
7. Liner and coatings tests have been successfully completed and documentation received by PCU;
8. All compaction tests, as required by the Section entitled "Excavations, Backfill, Compaction, and Grading Specifications", have been successfully completed by the CONTRACTOR and reviewed by PCU.
9. Two printed copies and one electronic copy in Acrobat "pdf" format of the Operation and Maintenance Manual for the lift station has been received by PCU.

B. Prior to the formal acceptance of the lift station by the PCU, a PCU acceptable BOUNDARY SURVEY that includes all improvements within the lift station site and out to the centerline of the adjacent roadway shall be submitted to PCU, in accordance with the Section entitled "Development Coordination". The CONTRACTOR and DEVELOPER shall bear the entire expense of rectifying all WORK improperly installed due to the construction of improvements not totally within the site dedicated to PCU. An electronic version and three copies of the certified BOUNDARY SURVEY shall be required.

C. The intent of the Formal Lift Station Start Up is for the CONTRACTOR to successfully demonstrate to PCU that the WORK will function as a complete and operable system under normal as well as emergency operating conditions and the lift station is ready for acceptance. All testing and inspection activities shall demonstrate that all applicable items of this MANUAL and the approved construction documents have been met.

D. The CONTRACTOR shall furnish all labor, fuel, energy, lubrication, water and all other materials, equipment, tools, and instruments necessary for the Formal Lift Station Up along with all other testing and inspection activities. Prior to the Formal Lift Station Start Up, the CONTRACTOR shall conduct preliminary testing of all equipment and make all changes, adjustments, and replacements required. All materials used shall be in accordance with the appropriate "Approved Materials Checklist".

Listed below is a partial checklist of requirements to be met.

1. The CONTRACTOR shall coordinate the Informal and Formal Lift Station Start Up activities with PCU, the manufacturer's representatives, and subcontractors. A factory representative knowledgeable in the mechanical and electrical equipment furnished shall inspect and supervise the operation of their respective equipment during the Formal Lift Station Start Up. Upon satisfactory completion of the equipment testing and inspection, the factory representative(s) shall issue the required manufacturer's warranty certificates.
2. The CONTRACTOR shall initiate startup of each system in accordance with the lift station's Operation and Maintenance Manual. The CONTRACTOR shall

demonstrate that all of the components of each system are operating under their own controls as designated without overheating or overloading any parts and without objectionable vibration as determined by PCU.

3. The CONTRACTOR shall observe the system operation and make adjustments as necessary to optimize the system performance. The CONTRACTOR shall coordinate with PCU for any adjustments desired or operational problems requiring debugging.
4. All functions of the lift station mechanical and electrical equipment shall be tested and inspected for operation and workmanship by the CONTRACTOR. All equipment shall be properly installed and meet the design performance requirements.
5. The pumps shall be flow tested at the lift station startup to verify their performance meets the design requirements and the manufacturer's pump curve.
6. A Lift Station Start-Up Report, as contained in this MANUAL, shall be completed by PCU.
7. The DEVELOPER shall bear the entire expense of rectifying WORK installed outside the lift station property.
8. No generator shall be used to power any portion of the lift station during the Final Lift Station Start-Up.

E. Re-testing:

If the results of the Formal Lift Start Up do not meet the requirements of this MANUAL, the deficiencies shall be corrected and the Formal Lift Start Up shall be rescheduled in accordance with the Section entitled "Field Testing and Inspection Procedures".

F. Fuel Tanks:

The CONTRACTOR, ENGINEER, and the DEVELOPER shall be fully responsible for complying with all COUNTY and FDEP (F.A.C. 62.762) storage tank installation protocols. The installation of any storage tank that is subject to the above standards shall be properly registered, insured, installed, and inspected accordingly. The CONTRACTOR shall provide a minimum 5 NORMAL WORKING DAYS advance notice of any storage tank installation to and receive written confirmation from the Utilities Director, the Purchasing Director, the Risk Management Insurance Section Manager, the Risk Management Regulatory Section Manager, and the Fleet Management Director. No fuel shall be placed within a fuel tank without the approval of PCU.

1. Fuel tanks, with a capacity of less than 550 gallons, do not require registration by FDEP. However, "Less than 550" and "1993" stickers are to be obtained from PCU and properly applied to the tanks prior to the Formal Lift Station Start Up.
2. Fuel tanks, with a capacity of 550 but less than 1320 gallons, shall have a properly completed "Storage Tank Facility Registration Form" reviewed and approved by PCU prior to it being submitted by the CONTRACTOR to the FDEP

Fuel Tank Division, with all applicable fees. The original FDEP Storage Tank Registration Placard shall be provided to PCU prior to the Formal Lift Station Start Up. A "1993" sticker and a laminated copy of the FDEP Storage Tank Registration Placard shall be properly applied to the tanks prior to the Formal Lift Station Start Up.

3. Fuel tanks, with a capacity of 1320 or more gallons, shall be required to have a "Spill Prevention, Control, and Countermeasure Plan (SPCC), that complies with Title 40, Code of Federal Regulations, Part 112, in addition to the requirements specified in the Section above.

F. Acceptance:

PCU shall recommend the lift station for formal acceptance by the COUNTY once the lift station functions as a complete and operable system under normal as well as emergency operating conditions, has been certified by the ENGINEER that it complies with all applicable specifications of this MANUAL and the approved construction documents, and all observed deficiencies have been corrected to PCU's satisfaction.

CHAPTER 5 WASTEWATER

Section 550-C Approved Materials Checklist December 2010

PLEASE TYPE OR PRINT CLEARLY IN BLACK INK

Project Name: _____

PCU Project File Number: _____

Contractor's Name: _____

Contractor's Address: _____

Contractor's Signature: _____

Engineer's Name: _____

Engineer's Address: _____

PCU Reviewer: _____ Date: _____

Approved: ____ Denied/Resubmit: ____

Comments:

_____
_____
_____
_____
_____
_____

With the submission of this document, the CONTRACTOR understands that the use of the following selected items, as individually indicated by the use of an "X", is mandatory.

Substitutions using other items contained within this Checklist shall be initiated by the CONTRACTOR submitting a revised Checklist to PCU for its review and approval at least 10 calendar days in advance of need.

It is also understood by the CONTRACTOR that PCU shall reject materials and products not in accordance with this document and the MANUAL. Any material or product not contained within this Checklist shall be approved in advance by the Utilities Code Committee in accordance with the provisions of the Utilities Code.

Shop drawings shall be required for all structures and similar items not contained within this checklist, such as manholes, wet wells, and other castings.

Four (4) sets of the CONTRACTOR's and ENGINEER's executed APPROVED MATERIALS CHECKLIST and any necessary shop drawings shall be submitted to PCU for its use and approval, plus the number of sets needed for the CONTRACTOR use. Ordering materials and products without specific written approval from PCU of the submitted list and shop drawings is NOT recommended and is done at the CONTRACTOR's sole expense and responsibility.

NOTE: The latest changes approved by the Utilities Code Committee are indicated by "underlining" and deleted items by "~~strikethroughs~~".

Wastewater Category 1 of 10: VALVES AND ACCESSORIES			
ITEM TO BE USED	**Manufacturer**	**Part Number**	**Comments**
Automatic Air Release Valves:			
	Val-Matic	48ABW	Epoxy Lined
	ARI	S-020-T02	FBE Coated
	ARI	S-020-SST02	Stainless Steel
Automatic Combination Air / Vacuum Release Valves:			
	Val-Matic	802ABW	Epoxy Lined
	ARI	D-025-PT02	Reinforced Nylon
	ARI	D-025-SST02	Stainless Steel
Air / Vacuum Release Valve Enclosures (Horizontal Venting and Medium Green):			
	Water Plus	131632	
	Channell	BPH 1730	
	Hydro-Guard	Safety-Guard 15100 Low Profile or 02100	
Air / Vacuum Release Valve and Large Diameter Manholes Frame and Cover:			
	US Foundry	USF 679-BK-M	
	CertainTeed	Pamrex 36"	Alternative – Not to be used in paved roadways.
Air / Vacuum Release Valve Service Saddles (Epoxy With Stainless Steel Straps):			
	Ford	Series FC202	
	JCM	406	
	Mueller	DR2S	
	Cascade	CNS 2	
Plug Valves – MJ & Flanged (8mil Fusion Bonded Epoxy Lined With Stainless Steel Bolts, Gear Operator To Be Sized For Rated Pressure Of The Valve, And For Use Only Within A Lift Station):			

	Dezurik	Series – PEC	
	Pratt	Ballcentric	
Gate Valves 16-inch Through 48-inch (Resilient Seated Only):			
	American Flow Control	Series 2500	
	Clow	Series F-6100	
	Mueller	Series A-2361	
	U.S. Pipe	Series 5460	
	Kennedy	Series 4571	
	M & H	Series 4067	
Gate Valves 12-inch And Smaller (Resilient Seated Only):			
	American Flow Control	Series 2500	
	American R/D	Series 2000	
	AVK	Series 25	
	Clow	Series F-6100	
	Kennedy	Series 4571	
	M & H	Series 4067	
	Mueller	Series A-2360	
	U.S. Pipe	Metroseal 250	
	Waterous	Series 500	
Tapping Sleeve (Fabricated Steel Mechanical Joint (Fusion Bonded)):			
	JCM	Series 414	
Tapping Sleeve (For All Taps On IPS O.D. PVC Pipe, Including Size On Size (18-8 Type 304 Stainless Steel Body, Flange, And Bolts), Flange To Accept Standard Tapping Valves.):			
	Ford	Series FTSS	
	JCM	Model 432	
	Mueller	Series H-304 S/S	
	Cascade	CFT-EX	
	Total Piping Solutions	Triple Tap	
Tapping Sleeve (Mechanical Joint For Cast Iron, Ductile Iron, PVC C-900 & AC Pipe; All Taps Including Size On Size.)			
	Mueller	H615 / H616 / H619	
	American Flow Control	2800	
	JCM	Model 432	
	Total Piping Solutions	Triple Tap	
Tapping Valves - MJ/Ductile Iron			
	M & H	Series 4751	
	American Flow Control	Series 2500	
	Mueller	T-2360 & T-2361	
	Clow	Series F-6114	

Insertion Valves - MJ/Ductile Iron RWGV (In Place of Line Stop/Tapping Sleeve)			
	Team Industrial Products	InsertValve	Available 4" through 12"
Locate Wire Access Box For Buried Valves			
	Bingham/Taylor	P 200NFG TEST 2T	
Valve Box With Lids (5¼ -Inch, ASTM A48 30B Cast or Ductile Iron, With "SEWER" cast into the lid top):			
	Bingham/Taylor Foundry	4905-X, 4905, 4904-L	
	American Flow Control*	Trench Adapter	* For mains with valve nuts that are 6 feet or deeper.
	Sigma	VB261, VB262, VB264, VB4650W	
	Star		Heavy Duty Screw or Slip Type
	Mueller	MVB	Use w/ AJBV-4" Locking Bolt

Wastewater Category 2 of 10: PIPE MATERIALS			
ITEM TO BE USED	**Manufacturer**	**Part Number**	**Comments**
Casing Spacers (All Sizes) Stainless Steel With Vinyl Runners Centering			
	Cascade	Series CCS / CCPS / AZ	
	PSI	C-G-2 Series	
	RACI	S/T, F/G, P/Q, M/N, E/H	
	PSI-Ranger	Ranger II	
	CCI	CSS8, CSS12	
	Advance Systems		
Ductile Iron Pipe For Valve Vaults (4-inch To 12-inch = PC 350, 16-inch To 20-inch = PC 250, 24-inch = PC200, 30-inch To 64-inch = PC 150) (DI Flanges, AWWA C115):			
	American Ductile Iron Pipe	Protecto 401	Wasser Ferro Clad Primer
	Griffin Pipe Products	Protecto 401	
	US Ductile Iron Pipe	Protecto 401	
Ductile Iron Pipe Coatings, Linings, and Wrappings (For Use In Lift Station Wet Wells)			
	Superior Environmental Products	Interior – SP 2000 Exterior – SC 3300 with Wrapidseal applied	

	Wrapidseal	Interior – Protecto 401 Exterior – Permite with Wrapidseal	
HDPE Pipe DR11 (Green Striped) (Use For Directional Bores Is Prohibited Except With Specific PCU Approval)			
	Chevron/Phillips	Performance Pipe / ISCO Pipe	
	CSR	Polypipe/Charter Plastics	
	ARNCO		
	JM-Eagle		
	National Pipe		
Painting Finish Aerial Piping, Fittings, and Valves (Field Primer)			
	Porter/International	286 U-Primer	
	Tnemec	37-77H Chem-Primer	
	Glidden	Alkyd Industrial Enamel	
	Colorwheel	635 Red Primer	
Painting Finish (Exterior)			
	Porter/International	2749 Light Base	
	Tnemec	Tnemec-Gloss 2H	
	Glidden	Alkyd Industrial Enamel	
	Colorwheel	600 Exterior Finish	
PVC (Light Green) 4-inch Through 12-inch Pipe (AWWA C-900, DR18) and 16-inch and larger pipe (AWWA C-905 or C-909, DR 25):			
	Bristolpipe		
	Certainteed	Certa-Lok	
	JM-Eagle		
	Ipex		
	Diamond Plastics		
	National Pipe		
	NAPCO	North American Pipe Company	
	Uponor ETI	Ultra-Blue C909 (green)	
	Underground Solutions	Fusible PVC	For Pressure Main Use Only
PVC Gravity Pipe – Mains and Services (SDR 26, Light Green In Color)			
	Certainteed		
	Can-Tex		
	JM-Eagle		
	Diamond Plastics		
	Bristolpipe		
	National Pipe		

	Vassallo		
	NAPCO	North American Pipe Company	
Pipe Lining Material – Gravity Mains (Must Meet ASTM F1216 And Be Equal To Materials Listed Below)			
	Insituform	CIP Liner	
	National Liner	CIP Liner	
	LMK Enterprises	Performance Liner	
	Steven's Technologies	CIP Liner 2 part 100% epoxy	
	Inner Cure Technologies	Reichhold/DION CIP Liner	
	Lanzo Lining	Lanzo CIP Lining System	
	Reynolds Inliner	Reichold/Intech	
	FirstLiner	FirstLiner CIP Lining System	
	Premier Pipe	Premier Pipe CIP Lining System	
Force Main Identification Tape (Light Green, 6-Inches Wide, 2-inches High Black Lettering, Adhesive Backed):			
Buried Force Main Warning Tape (Light Green, 3-inches Wide, 1-Inch High Black Lettering, Non-Adhesive Backed):			
Force Main Locating Wire (Single Strand 14-Gauge Solid Copper Wire with Light Green Colored Insulated Covering):			
	Copperhead	Reinforced Locating Wire	Alternative
Locating Marker Systems (Force Main) (Green In Color):			
	3M	Scotch Mark EMSII Electronic Marker Locator #1265	
	3M	Scotch Marker Electronic Ball Marker #1404	
Curb and Pavement Markers (Green in Color, Imprinted With The Words "POLK COUNTY UTILITIES" And "CALL 811 BEFORE YOU DIG" With "SANITARY SEWER SERVICE" or "FORCE MAIN VALVE" As Applicable):			

Wastewater Category 3 of 10: PIPE FITTINGS			
ITEM TO BE USED	**Manufacturer**	**Part Number**	**Comments**
Expansion Joints			
	EBAA Iron Inc.		
	Fernco		
	Star Pipe	Star Flex 5000, 5100, & 5200	
Fittings – Ductile Iron (C153 SSB/C110 FLG) (Cement Mortar Lined and Coated In Accordance With AWWA C104) (Outside Surfaces Shall Be Prime Coated Only If Located Aboveground And Painted):			
	Union/Tyler		
	US Pipe		
	American		
	Sigma		
	Star Pipe		
Fittings, Adapters, And Plugs - Gravity PVC (SDR 26, Light Green in Color):			
	Harco		
	JM-Eagle		
	Multi-Fittings		
	Plastic Trends		
Clean-Outs With Caps – PVC (White in Color, Exterior Nut):			
	USSI	Clean-Out Smart Plug with Plug Seat	For Use On PCU Operated Infrastructure As Required By PCU
Restrained Joints (Ductile Iron Pipe):			
	EBAA Iron Inc.	Mega-lug 1100 (3-inch to 48-inch) Mega-lug 1100HD (10-inch to 48-inch) Mega-lug 2100 (3-inch to 12-inch) Series RS 3800 Restrainer	RS 3800 Includes Sleeve
	American	Fast Grip Gaskets Flex Ring Field Flex Ring Lok Ring	
	Ford	Series 1400-D	
	Sigma	One LOK SLD	

	Sigma	LOK Series PVP and PVPF	
	Star Pipe	Stargrip Series 3000, 3000S, 3000OS, 3100P, & 3100S Flange Adapter Series 200 & 400 Retainer Gland Series 600 Restrainer Series 1000, 1100, & 1200 Flange Adapter Series 3200 Series 4000 & 4100P Series 3200 & 4200	
	Tyler/Union	Tuf Grip TLD Series 1000, 1000S Tuf Grip Dual Wedge Restraint Series 1500	For DI Pipe Use For PVC, DIP, HDPE pipe use
Restrained Joints (PVC Pipe):			
	EBAA Iron Inc.	Mega-lug 2000 PV (4-inch to 36-inch) F/IPS, DR25, DR18, DR14 & DR41 Mega-lug 2000 SV (4-inch to 12-inch) Mega-lug 2100 Flange Adapter (3-inch to 12-inch) Mega-lug 1500 Bell Restraint (4-inch to 12-inch) Mega-lug 1600 Bell Restraint (4-inch to 12-inch) F/PVC C-900 Bell Restraint 2800 Series (14-inch to 42-inch) F/PVC C-905 Bell Restraint	
	Uni-Flange/Ford	1350 Bell Restrainer (2-inch to 12-inch) 1350 Bell Restrainer (2-inch to 8-inch) (14-inch to 24-inch) 1390 Bell Restrainer (4-inch to 12-inch) (12-inch to 24-inch) 900 Adapter Flange (4-inch to 12-inch) 1500 Series “CIRCLE LOCK” 1300 Fitting Restrainer (14-inch to 24-inch)	

	JCM	610 Sur-Grip Bell Joint Restrainer (14-inch to 24-inch) 621 Sur-Grip Bell Joint Restrainer (14-inch to 24-inch) 610 Fitting Restrainer (4-inch to 30-inch) 620 Bell Restrainer (4-inch to 12-inch) 621 Bell Restrainer (14-inch to 30-inch)	
	Sigma	One LOK SLC	
	Sigma	PV LOK Series PVP and PVPF	
	Star	Stargrip PVC Series 4000 Series 1100 PVC Harness Series 1200 PVC Harness Series 4000 & 4100P Series 3200 & 4200 Restrainer Series 1000, 1100, & 1200 Flange Series 3200 & 4200 Adapter Flange Series 200 & 400	
	Tyler/Union	Tuf Grip TLP Series 2000, 2000S Tuf Grip Dual Wedge Restraint Series 1500 Bell Joint Restraints Series 3000: 32U, 33U, 34U, 35U	For PVC Pipe Use For PVC, DIP, HDPE pipe use For PVC Pipe Use

Wastewater Category 4 of 10: MANHOLES AND ACCESSORIES			
ITEM TO BE USED	**Manufacturer**	**Part Number**	**Comments**
Encapsulation and Joint Seal (12 inch minimum width):			
	Canusa	Wrapid Seal / Wrapid Tape	
	Cretex	Wrap External Joint Seal	

	PSI	Boa Tape	
Frame and Cover (With "POLK COUNTY", "SANITARY", "FLORIDA" cast into the top of the cover):			
	US Foundry	USF 225-AS	Regular (4' Inside Dia.) Manholes
	EJ	Ergo	Hinged Cover and Frame Alternative for Regular Dia. Manholes – Not for use in paved roadways.
	CertainTeed	Pamrex 24"	Hinged Cover and Frame Alternative for Regular Dia. Manholes – Not for use in paved roadways.
	US Foundry	USF 667-CR-XB	Large (5' and Larger Inside Dia.) Manholes
	CertainTeed	Pamrex 36"	Hinged Cover and Frame Alternative for Large Dia. Manholes – Not for use in paved roadways.
	EJ	Ergo XL	Hinged Cover and Frame Alternative for Large Dia. Manholes – Not for use in paved roadways.
Manhole Insert (No Ventilation Hole)			
	Bay Area Plastics	Tight Seal Insert - Black	Polypropylene with 1/8" Minimum Continuous Polymer Thickness.
	USSI-USA	Inflow Defender - Black	HDPE with 1/8" Minimum Continuous Polymer Thickness.
	Inflow Systems	Inflow Shield	16 Gage Type 304 SS
Jointing Material			
	K.T. Snyder Co, Inc.	Ram-Nek	

Material – Concrete			
	Mack Precast		Precast
	Standard Precast		Precast
	Hanson Pipe & Product		Precast
	Oldcastle Precast		Precast
	Atlantic TNG		Precast
	Allied Precast		Precast
Pipe Seals, Force Main Entering Wet Well And/Or Valve Box			
	Link Seal	Model S-316 Link Seal Modular Seal	
Pipe Seals, Manhole – Gravity Less Than 12-inch			
	Atlantic Concrete	A-Lok (cast-in-place)	
	NPC	Kor-N-Seal Model WS	
Pipe Seals, Manhole – Gravity Greater Than Or Equal To 12-inch			
	Atlantic Concrete	A-Lok (cast-in-place)	
Surface Coatings – Exterior (Manholes, Wet Wells, and Valve Vaults)			
	Carboline	Bitumastic 300M	
	Conseal	CS-55	
Surface Coatings – Interior (Standard Manholes only)			
	Carboline	Bitumastic 300M	
	Conseal	CS-55	
Surface Coatings – Interior (Light Colors) (Master/Drop/FM Receiving Manholes, Wet Wells, and Valve Vaults)			
	Sauereisen	SewerGuard 210	
	Sauereisen	F-170	
	I.E.T., Inc. / IET Systems/CoREZYN	IET-Crete COR75-AQ-010	Two-Part Resin, 10-Year Warranty
	Kerneos Aluminates Technologies	Sewpercoat	
	CCI Spectrum, Inc.	Spectrashield	
	Strong Company	Strong-Seal Systems	
	Sherwin-Williams	Cor-Cote SC	Sewer Cote Epoxy
	Sherwin-Williams	Sherflex	Polyurethane Elastomer
	Raven Lining	Raven 404	
	Raven Lining	Raven 405	
Top Adjusting Rings (Use Must Be Approved In Advance By FDOT Or Polk County Transportation):			
	Ladtech, Inc.		HDPE

	Cretex	Pro-Ring	Expanded Polypropylene (EPP)
			Reinforced Concrete
	EJ	Riser Rings	
Lining Systems (Light Colors) (Master/Drop/FM Receiving Manholes, Wet Wells, and Valve Vaults)			
	AGRU Liner	HDPE Liner	Factory Installed
	GSE Studliner	HDPE Liner	Factory Installed
	GU Liner	Polypropylene (PP) Liner	Factory Installed

Wastewater Category 5 of 10: LIFT STATION MATERIALS AND ACCESSORIES			
ITEM TO BE USED	**Manufacturer**	**Part Number**	**Comments**
Odor Control System and Equipment:			
	Premier Chemicals	Thioguard	
Alarm Horn (AH)			
	Federal Signal	450 series	
	Edwards	871P-G1	
Alarm Light (AL)			
	Federal Signal	225 XST	
	Edwards		
Block Walls - Anti-Graffiti Paint			
	American Building	Polyshield Restoration	
	Richard's Paint	Professional Water Seal & Graffiti	
	Environmental Products	Graffiti-Proof	
Control Panels (CP)			
	Curry Controls Company		
	DCR Engineering		
	Revere Control Systems		
	Rocha Controls		
	Unitron Controls		
Control Panel - Control Circuit Breaker			
	Square D	QOU120 or Multi-9 series	
Control Panel - Control Circuit Transformer			
	Square D	EO-18	

Control Panel - Electric Box Mounts			
	Unistrut	P1110T	
Control Panel - Emergency Circuit Breaker (ECB)			
	Square D		Required where transfer switch is not provided.
Control Panel – Enclosure (with the appropriate Arc Flash Label on Panel Door)			
	Hoffman		
	Rittal		
	Schaefer		
Control Panel - Explosion-Proof Seal- Off			
	Crouse-Hinds		
	OZ/Gedney		
Control Panel - Float Regulator (FR)			
	Anchor Scientific	Roto-Float	Mount floats to stainless steel cable with 15 lbs. anchor using stainless steel cable ties/clamps.
	Siemens	9G	
	Contegra	FS 96	
Control Panel - Fuses (F)			
	Bussmann		
Control Panel - Hand-Auto-Off Selector (HOA)			
	Square D	9001-SKS	
Control Panel - Horn Silence Button (HSS)			
	Square D	9001-SKR-IU	
Control Panel – Moisture and Temperature Failure Relays			
	MPE	PMR	
	Flygt	Mini-CAS	
	ATC Diversified	SPM	
Control Panel - Motor Circuit Breaker (MB)			
	Square D		
Control Panel - Motor Starter (MS)			
	Square D		
Control Panel - Solid State Overload			
	Square D	TeSysT	
Control Panel - Supplemental Protector Breaker – 3-pole, 1-amp			

	Square D	MG24532	
Control Panel - Surge Protector (UL 1449, Latest Edition Listed And Labeled), , Voltage, and Phase To Match Service, Rated 80,000-amps Per Mode (Minimum 10-Year Warranty).			
	Eaton	SPD	
	Innovative Technologies	PTE	
Control Panel - Terminal Strip (TS)			
	Square D	9070GR6	
Flow Meters With Replaceable Sensors (Pipe Length Before And After Meter Is To Be 5 Times The Diameter Of The Pipe.)			
	Foxboro		
	Siemens		
	ABB		
Generator Circuit Breaker			
	Square D		
Generator Fuel Tanks (Double Walled And For Fixed Generator Systems Only)			
	Convault		
	Modern Welding		
	Phoenix		
Generator Systems, Fixed			
	Caterpillar		
	Cummins		
	Kohler		
Generator Systems, Portable			
	Caterpillar		
	Cummins		
	Kohler		
Generator Receptacle (GR)			
	Russelstoll	JRSB 1044 FR (100 amp)	For $\leq$ 25 Hp Pumps. Required when transfer switch not provided.
	Russelstoll	JRSB 2044 (200 amp)	For 25 Hp > Pumps. Required when transfer switch not provided.
Generator Automatic Transfer Switch			
	Emerson/ASCO.		

	Cummins.		
	Russelectric.		
	Eaton/Cutler-Hammer		
Generator Manual Transfer Switch			
	ESL Power Systems	Stormswitch	Replaces service entrance breaker and generator breaker and receptacle.
Human Machine Interface (HMI)			
	Schneider Electric	Magelis	
Main Service Disconnect Breaker			
	Square D		
Main Circuit Breaker (MCB)			
	Square D		
Main Circuit Transformer (MCT)			
	Square D	500SV43F	
Odor Control Monitoring Instrument			
	Precision Control	Model SRC-1	
Pressure Gauges:			
	Ashcroft	1279	0-60 PSI
	Ametek	1980	
	Wika	XSEL	
Pressure Gauges (Diaphragm Seals)			
	Ashcroft	Type 201	
Level Hydrostatic Pressure Transducers- 0 To 15 psi Range			
	Endress Hauser	FMX 21	42mm Heavy Duty version.
	Keller America	LevelRat	
	Blue Ribbon Ind.	Birdcage Pressure Transducer	
Sluice Gate For Wet Well			
	BNW	Model 77	316 ss
	Fontaine	Model 20	316 ss
Submersible Pumps With Enclosed Impellers			
	Hydromatic		
	Flygt		

Check Valves 4-inch And Larger (8 mil Epoxy Lined)			
	M & H	159	
	Mueller	Series 2600 (Up to 12 inches)	
	Mueller	Series 8001 (16" and Larger)	
	American Flow Control	Series 600 or 50 line	
Cushion Check Valves (Oil Filled)			
	GA		
	APCO		
	CCNE		
Variable Frequency Drives			
	Schneider-Electric Square D	Altivar	
Variable Frequency Motors			
	U.S. Motors	Rated for inverter duty only	
	Baldor	Rated for inverter duty only	
	Reliance	Rated for inverter duty only	
Wet Well and Valve Vault Access Frames and Covers (A minimum non-traffic bearing load rating of 300 PSF or, if subject to vehicular traffic, a H-20 traffic bearing load rating)			
	Halliday Products		
	Bilco Company		
	USF Fabrication, Inc.		
Lift Station Wet Well Fall Protection System			
	Halliday Products	Retro Grate Fall Thru Protection System	
	Bilco	Fall Protection Grating System	
	USF Fabrication, Inc.	Hinged Hatch Safety Grate	
Pad Locks			
	Videx CyberLock	PL-01KR, PL-02KR, PL-03KR (Key Retaining)	CL-6P3WR (Installed in Schlage Pad Lock w/ 1" or 2" or 3" SS Shackle, as appropriate for each application)

	Videx CyberLock	PL-01, PL-02, PL-03 (Non-Key Retaining)	CL-6P3WR (Installed in Schlage Pad Lock w/ 1" or 2" or 3" SS Shackle, as appropriate for each application)
Uninterruptable Power Supply (UPS)			
	Transtronics	BVUPS	Provide with (2) werker batteries or equal
Electric Override Key Switch			
	Knox Key Switch	3500 Series	For Use with Facilities with Electrically Operated Gated Access

Wastewater Category 6 of 10: VALVES AND ACCESSORIES (PLANTS AND REMOTE FACILITIES)			
ITEM TO BE USED	**Manufacturer**	**Part Number**	**Comments**
Automatic Combination Air / Vacuum Release Valves:			
	Val-Matic	VM-38	Air Release Only – Plant, Facility Use Only
	Val-Matic	VM-45	Air Release Only – Plant, Facility Use Only
	Val-Matic	VM-200C	Combination – Plant, Facility Use Only
Gate Valves, Plug Valves			
	DeZurik	PEF Series Plug Valve	According to Application.
	DeZurik	Knife Gate Valves	According to Application
	Val-Matic		According to Application.
Valve Actuators			
	Beck	Model 11	Remote Indication or Position Display According to Application
	Auma	SA	Remote Indication or AumaMatic, According to Application

Hydraulically Operated Control Valves (Pressure Reducing/Sustaining Valves):			
	Cla-Val		Model or Series based on field application.
	OCV		Model or Series based on field application.
	Watts/Ames		Model or Series based on field application.

Wastewater Category 7 of 10: PUMPS, CHEMICAL FEED SYSTEMS			
ITEM TO BE USED	**Manufacturer**	**Part Number**	**Comments**
Vertical Turbine			
	Goulds		
	Flowserve	VIC, VIT, SMVT, or DWT	based on application.
	Deming		(AKA: Process Systems, Inc.)
	National		
Centrifugal/Split Case/Submersible/End Suction			
	Aurora		
	Flowserve		
	Flygt	N or C Series submersible	
	Goulds		
Chemical Pumps			
	Prominent		Appropriate series based on flow rate. Degassing heads for NaOCl.
Skid, Shelf Mounted Feed Systems			
	Blue Planet		Utilize "Polk County" junction box with hour meter/operating indication.
Chemical Tanks			
	Snyder	Captor/Dual Containment	HDLPE with NaOCl Resin
	Poly Processing Co.	Saf-T tank	XLPE with OR 1000 Inner Coating
Sludge Transfer Pumps – Rotary Lobe			

	Boerger	Model PL, CL, or FL, typical.	Sized Based on Application.

Wastewater Category 8 of 10: TANKS and GENERATORS			
ITEM TO BE USED	**Manufacturer**	**Part Number**	**Comments**
Pre-stressed Concrete Tanks			
	Crom		
	Pre-con		
Standby Power Generators			
	Kohler		3-Ph, 480V Diesel
	Caterpillar		3-Ph, 480V Diesel
	Cummins		3-Ph, 480V Diesel
Fuel Tanks (Stand-alone)			
	Convault		Pneumercator level/leak detection systems also required. LC 1000 w/ LS600 and LS610.
	Modern Welding		Pneumercator level/leak detection systems also required. LC 1000 w/ LS600 and LS610.
	Phoenix		Pneumercator level/leak detection systems also required. LC 1000 w/ LS600 and LS610.

Wastewater Category 9 of 10: FLOW METERS			
ITEM TO BE USED	**Manufacturer**	**Part Number**	**Comments**
Flow Meters (Electro-magnetic)			
	Siemens	Sitrans FM Mag, 5000 series unless using bussed network.	
	ABB	WaterMaster Series	
	Foxboro	9100A w/ IMT 25	

Wastewater Category 10 of 10: ELECTRICAL			
ITEM TO BE USED	**Manufacturer**	**Part Number**	**Comments**
VFDs, Relays, Breakers			
	Schneider-Electric	Square D	
Security/Surveillance System			
	Axis		Camera/Equipment
	Bosch		Camera/Equipment
	Pelco		Camera/Equipment
	Exaqvision		Software

CHAPTER 5 **WASTEWATER** Rev December 2012

Section 550-D **Wastewater Hydraulic Standards** December 2010

Force Main Design Criteria		
Minimum Velocity	2 fps	
Maximum Velocity	6 fps	
Maximum Transmission Pressure	40 psi	
Hazen Williams Friction Coefficient (C) New	130	All existing and future pipe materials (Nominal ID)
Pump Station Design Criteria		
Maximum Pump TDH	150 feet	From both pumps off
Minimum (run out) pump TDH		Based on lag pump on
For Pump Station Evaluation: Insure Peaking Factors comply with Ten State Standards for Pump Station Evaluations The design pumping capacity of the station is estimated by multiplying the AADF with the applicable peaking factors as follows:	<u>Annual Average Daily Flow (AADF</u> Flows to 100,000 GPD 100,000 to 250,000 GPD 250,000 to 500,000 GPD 500,000 to 1,000,000 GPD Flows Greater Than 1,000,000 GPD	<u>Peak Factor</u> 4.0 3.5 3.2 3.0 2.5
For Transmission System Evaluation: The design pumping capacity of the station is estimated by multiplying the AADF with the applicable countywide peaking factor as follows:	<u>Peak Factor</u> 4.0	
	All calculations shall provide for 100 percent of all receiving system pumps to be operating at the same time that the proposed lift station(s) will be operating.	

CHAPTER 5 **WASTEWATER** Rev March 2012

Section 550-E **Wastewater Force Main Pressure Test Form (PVC and Ductile Iron Pipe)** December 2010

Project: _____

PCU Project No.: _____

Procedures for conducting this test shall be in strict conformance with AWWA standard C600, latest revision. Maximum allowable leakage shall be: $L = \frac{ND(P)^{1/2}}{7{,}400}$

Where:
L = maximum allowable leakage, measured in gallons per hour
N = number of joints in the tested line (where a pipe joins a pipe or a pipe joins a fitting)
D = nominal diameter of pipe, measured in inches
P = test gauge pressure, measured in pounds per square inch (minimally 150 psi)
(For a 2-hour test at 150 psi, equation simplifies to: L = ND x 0.00331)

TESTING PARAMETERS & SYSTEM INFORMATION

Test Pressure (minimally 150 psi):		psi	
Beginning Test Pressure:	psi	Ending Test Pressure:	psi
Test Duration (minimally 2 hours):		Hours:	
Date of Test:			
Time at Start of Test:		Time at End of Test:	
Test Segment Location:			

Pipe Type	Diameter, inches	Length, feet	Number of Joints	Max. Leakage for 2 Hour Test, gallons
Total Maximum Allowable Leakage, gallons:				
Total Actual Leakage, gallons:				

CONTRACTOR & INSPECTOR PERSONNEL INFORMATION

	Contractor	Inspector
Signature:		
Printed Name:		
Company Name:		
Phone Number:		
Date:		

CHAPTER 5 WASTEWATER

Section 550-F Wastewater Force Main Pressure Test Form (HDPE Pipe) December 2010

Project: _____

PCU Project No.: _____

Procedures for conducting this test shall be in accordance with ASTM F 2164 and AWWA Standard C600, latest revision, where applicable. Pneumatic Testing is strictly prohibited.

Prior to Hydrostatic Pressure Testing Procedure:

1) Flush main with a minimum velocity of 3 fps to clear foreign materials.
2) Insure that main to be tested is restrained against horizontal and vertical movement. Exposing joints only is allowed.

Hydrostatic Pressure Testing Procedure:

1) Fill main slowly with water to remove air.
2) Pressurize up to 1.5 times the Pressure Class of the pipe used at the lowest point of the main being tested.
3) Maintain for 4 hours while adding water as needed in non-monitored amounts as pipe will expand while until pressure.
4) Reduce pressure by 10 psi and monitor for 1 hour.
5) Main passes if there are no leaks within 5 percent of the remaining pressure after reduction.

TESTING PARAMETERS & SYSTEM INFORMATION

Calculated Test Pressure:			psi
Beginning Test Pressure:	psi	Ending Test Pressure:	psi
Test Duration (minimally 5 hours):		Hours:	
Date of Test:			
Time at Start of Test:		Time at End of Test:	

Diameter, inches	Length, feet	Pressure Class, psi	Test Segment Location

CONTRACTOR & INSPECTOR PERSONNEL INFORMATION

	Contractor	Inspector
Signature:		
Printed Name:		
Company Name:		
Phone Number:		

CHAPTER 5 WASTEWATER

Section 550-G Wastewater System CCTV and Mandrel Inspection Report December 2010

Project: _____

PCU Project No.: _____

Test Date:		Street Name:	
Pipe Size:		Pipe Type & Pipe Specification:	
Start MH #:		Start MH Depth:	
End MH #:		End MH Depth:	
5% Mandrel Pulled With or Against Flow Path?			
Camera Pulled With or Against Flow Path?			

Tape Counter	Actual Footage	Clock Reference	Comment/Description

CONTRACTOR & INSPECTOR PERSONNEL INFORMATION

	Contractor	Inspector
Signature:		
Printed Name:		
Company Name:		
Phone Number:		
Date:		

CHAPTER 5 WASTEWATER

Section 550-H Wastewater Force Main Pigging (Swabbing) Report Form

December 2010

Project: _____

PCU Project No.: _____

Procedures for pigging (swabbing) the system shall be in strict conformance with the Polk County Utilities Standards and Specifications Manual.

PIGGING (SWABBING) PARAMETERS & SYSTEM INFORMATION

Date:			
Time at Start:		Time at End:	
Segment Location:			
Pig Outside Diameter:		Pig's Maximum % Compression of Full Size:	
Pig Exterior Material Composition:		Pig Interior Material Composition:	
Pig Manufacturer:			

Pipe Type	Diameter, inches	Length, feet	Number of Times	Estimated Amount of Water Used, gallons
Total Estimated Amount of Water Used, gallons:				
Total Actual Amount of Water Used, gallons:				

CONTRACTOR & INSPECTOR PERSONNEL INFORMATION

	Contractor	Inspector
Signature:		
Printed Name:		
Company Name:		
Phone Number:		
Date:		

CHAPTER 5 WASTEWATER

Section 550-I Formal Lift Station Start Up Completion Form December 2010

Prior to the pump station start-up, the DEVELOPER/CONTRACTOR shall submit this completed form to PCU with the following items successfully completed prior to the Formal Lift Station Start Up.

- ❑ Locate Wire has been successfully checked;
- ❑ All Force Main Valves have been located;
- ❑ CCTV Video Inspections have been successfully completed;
- ❑ FDEP Water Clearance has been received by PCU;
- ❑ FDEP Fuel Storage Tank Placard has been properly placed, if applicable;
- ❑ Copy of latest Power Company Billing Statement has been submitted to PCU.

Transfer of utility billing shall be requested by PCU after final acceptance of the entire wastewater system by the Polk County Board of County Commissioners.

GENERAL INFORMATION

Project Name: _____

PCU Project #: _____

Scheduled Formal Start-Up Date: _____ Informal Start-Up Date: _____

Station Name: _____ PCU Lift Station #: _____

Address: _____ Subdivision: _____

Power Company: _____ Meter Number: _____

Water Company: _____ Meter Number: _____

START-UP ATTENDEES

Contractor: _____ Phone Number: _____

Consulting Engineer: _____ Phone Number: _____

Developer: _____ Phone Number: _____

Utilities Inspector: _____ Phone Number: _____

CONTROL PANEL

Control Panel Rep: _____ Phone Number: _____

Control Panel Name: _____ Serial Number: _____

SCADA PANEL

SCADA Panel Rep: _____ Phone Number: _____
SCADA Panel Name: _____ Serial Number: _____

ELECTRICAL EQUIPMENT

Main Service Voltage: _____ Amperage: _____
Main Breaker Name: _____ Amperage: _____
Pump Breaker Name: _____ Amperage: _____
Control Breaker Name: _____ Amperage: _____
Main Disconnect: _____ Amperage: _____
Is Disconnect Lockable? YES NO
TVSS Type:
Transformer: _____ Primary: _____ Secondary: _____ KVA: _____
Alternator Name: _____
Phase Monitor Name: _____ Type: _____
Starter Name: Size: Heater Size: _____
Voltage: _____ Phase: _____ Amps: _____ Horse Power: _____
Pressure Transducer Manufacturer:

Main Service SCA (Available Short Circuit Amperage): _____

Main Breaker AIC (Short Circuit Amps Capacity): _____

PUMP EQUIPMENT

Pump Manufacturer: _____ Model #: _____
Impeller Size: _____ Number: _____
Pump #1 Serial #: _____ Pump #2 Serial #: _____
Pump #3 Serial #: _____ Pump #4 Serial #: _____
Pump #5 Serial #: _____

FLOAT BALLS

Float Ball Manufacturer: _____

Off Level Depth: _____ Lead Start Depth: _____
Lag 1 Start Depth: _____ Lag 2 Start Depth: _____
High Level Depth: _____

MECHANICAL

Valve Vault Size: _____ Wet Well Diameter: _____ Wet Well Depth: _____
Base Elbow Size: _____ Riser Pipe Size: _____
Plug Valve Manufacturer: _____

DESIGN CRITERIA

Point 1 GPM: _____ At TDH: _____
Point 2 GPM: _____ At TDH: _____
Point 3 GPM: _____ At TDH: _____

GENERATOR

Generator Manufacturer: _____ KVA _____ KW _____
Fuel Tank Manufacturer: _____ Fuel Tank Capacity: _____
Generator Plug Manufacturer: _____
Transfer Switch Manufacturer: _____
Generator Serial Number: _____ Generator Model Number: _____
Day Tank Capacity: Year of Manufacture:
Engine Manufacture: _____ Engine Model Number: _____
Engine Serial Number: _____ Tire Size, if Portable: _____

CROSS CONNECTION CONTROL

Cross Connection Control Assembly Manufacturer: _____ Model #: _____

FLOW METER

Flow Meter Manufacturer: _____ Flow Meter Model #: _____

ODOR CONTROL SYSTEM

Manufacturer: _____ Additive Type: _____

For PCU Use Only

PUMPING CAPACITY					
	PS# 1	**PS# 2**	**PS# 3**	**PS# 4**	**PS# 5**
GPM at Startup:					
TDH at Startup:					
PSI at Startup:					

ELECTRICAL						
	Phase A:		**Phase B:**		**Phase C:**	
# 1 Pump Amps at Startup						
# 2 Pump Amps at Startup						
# 3 Pump Amps at Startup						
# 4 Pump Amps at Startup						
# 5 Pump Amps at Startup						
Pump Megs	Pump # 1:		Pump # 2:		Pump # 3:	
	Pump # 4:		Pump # 5:			
Incoming Service Voltage	A to B:		A to C:		B to C:	
	A to GND:		B to GND:		C to GND:	

MECHANICAL

Plug Valve Size: _____ Plug Valve Length _____

Check Valve Manufacturer: _____

Check Valve Size: _____ Type: _____

Check Valve Lay Length: _____

Oil Filled Gauges: _____ Manufacturer: _____

By-Pass Size: _____ Female Cam-Lock: _____

Pipe Size(s) Entering Wet-Well: _____

CHAPTER 5 WASTEWATER

Section 550-I Formal Lift Station Start Up Completion Form December 2010

Station Pumps To: _____

O & M Manual Digital Copy Provided?	YES	NO
Property Survey Report Provided?	YES	NO
FDEP Fuel Tank Placard, if applicable	YES	NO
Certification of ARC Testing for Liner Provided?	YES	NO

Comments:

List Deficiencies/Discrepancies:

CHAPTER 5 WASTEWATER

Section 550-J Wastewater System Schedule of Valves December 2010

Date: _____

Contractor: _____

Project: _____

PCU Project No.: _____

Item No.	Item Description	Qty.	Unit	Unit Cost ($)	Extended Cost ($)
1	Single Service, Long				
2	Single Service, Short				
3	Double Service, Long				
4	Double Service, Short				
5	8” PVC, SDR-26, 0’-6’ deep				
6	8” PVC, SDR-26, 6’-8’ deep				
7	8” PVC, SDR-26, 8’-10’ deep				
8	8” PVC, SDR-26, 10’-12’ deep				
9	8” PVC, SDR-26, 12’-14’ deep				
10	8” PVC, SDR-26, 14’-16’ deep				
11	10” PVC, SDR-26, 0’-6’ deep				
12	10” PVC, SDR-26, 6’-8’ deep				
13	10” PVC, SDR-26, 8’-10’ deep				
14	10” PVC, SDR-26, 10’-12’ deep				
15	10” PVC, SDR-26, 12’-14’ deep				
16	10” PVC, SDR-26, 14’-16’ deep				
17	12” PVC, SDR-26, 0’-6’ deep				
18	12” PVC, SDR-26, 6’-8’ deep				
19	12” PVC, SDR-26, 8’-10’ deep				
20	12” PVC, SDR-26, 10’-12’ deep				
21	12” PVC, SDR-26, 12’-14’ deep				
22	12” PVC, SDR-26, 14’-16’ deep				
23	15” PVC, SDR-26, 0’-6’ deep				
24	15” PVC, SDR-26, 6’-8’ deep				
25	15” PVC, SDR-26, 8’-10’ deep				
26	15” PVC, SDR-26, 10’-12’ deep				
27	15” PVC, SDR-26, 12’-14’ deep				
28	15” PVC, SDR-26, 14’-16’ deep				
29	Standard Precast Manhole with Ring and Cover, 0’-6’ deep				

30	Standard Precast Manhole with Ring and Cover, 6'-8' deep				
31	Standard Precast Manhole with Ring and Cover, 8'-10' deep				
32	Standard Precast Manhole with Ring and Cover, 10'-12' deep				
33	Standard Precast Manhole with Ring and Cover, 12'-14' deep				
34	Standard Precast Manhole with Ring and Cover, 14'-16' deep				
35	Pump Station, Duplex Complete				
36	Pump Station, Triplex Complete				
37	Standby Generator Set				
38	Odor Control System				
39					
40					
41	4" PVC, AWWA C-900, DR 18, Green				
42	4' DIP, Pressure Class 350, Epoxy-Lined, Bituminous Coated				
43	4" Gate Valve Assembly, Complete				
44	4" 11 ¼ Degree Bend, DI, C153, Epoxy-Lined, Bituminous Coated				
45	4" 22 ½ Degree Bend, DI, C153, Epoxy-Lined, Bituminous Coated				
46	4" 45 Degree Bend, DI, C153, Epoxy-Lined, Bituminous Coated				
47	4" 90 Degree Bend, DI, C153, Epoxy-Lined, Bituminous Coated				
48	4" Tee, DI, C153, Epoxy-Lined, Bituminous Coated				
49	4" Cross, DI, C153, Epoxy-Lined, Bituminous Coated				
50					
51	4" HDPE				
52					
53	6" PVC, AWWA C-900, DR 18, Green				
54	6" DIP, Pressure Class 350, Epoxy-Lined, Bituminous Coated				
55	6" Gate Valve Assembly, Complete				

56	6” 11 ¼ Degree Bend, DI, C153, Epoxy-Lined, Bituminous Coated				
57	6” 22 ½ Degree Bend, DI, C153, Epoxy-Lined, Bituminous Coated				
58	6” 45 Degree Bend, DI, C153 Epoxy-Lined, Bituminous Coated				
59	6” 90 Degree Bend, DI, C153, Epoxy-Lined, Bituminous Coated				
60	6” Tee, DI, C153, Epoxy-Lined, Bituminous Coated				
61	6” Cross, DI, C153, Epoxy-Lined, Bituminous Coated				
62					
63	6” HDPE				
64					
65	8” PVC, AWWA C-900, DR 18, Green				
66	8” DIP, Pressure Class 350 Epoxy-Lined, Bituminous Coated				
67	8” Gate Valve Assembly, Complete				
68	8” 11 ¼ Degree Bend, DI, C153, Epoxy-Lined, Bituminous Coated				
69	8” 22 ½ Degree Bend, DI, C153, Epoxy-Lined, Bituminous Coated				
70	8” 45 Degree Bend, DI, C153, Epoxy-Lined, Bituminous Coated				
71	8” 90 Degree Bend, DI, C153, Epoxy-Lined, Bituminous Coated				
72	8” Tee, DI, C153, Epoxy-Lined, Bituminous Coated				
73	8” Cross, DI, C153, Epoxy-Lined, Bituminous Coated				
74					
75	8” HDPE				
76					
77	10” PVC, AWWA C-900, DR 18, Green				
78	10” DIP, Pressure Class 350 Epoxy-Lined, Bituminous Coated				
79	10” Gate Valve Assembly, Complete				
80	10” 11 ¼ Degree Bend, DI, C153,				

	Epoxy-Lined, Bituminous Coated				
81	10” 22 ½ Degree Bend, DI, C153, Epoxy-Lined, Bituminous Coated				
82	10” 45 Degree Bend, DI, C153, Epoxy-Lined, Bituminous Coated				
83	10” 90 Degree Bend, DI, C153, Epoxy-Lined, Bituminous Coated				
84	10” Tee, DI, C153, Epoxy-Lined, Bituminous Coated				
85	10” Cross, DI, C153, Epoxy-Lined, Bituminous Coated				
86					
87	10” HDPE				
88					
89	12” PVC, AWWA C-900, DR 18, Green				
90	12” DIP, Pressure Class 350 Epoxy-Lined, Bituminous Coated				
91	12” Gate Valve Assembly, Complete				
92	12” 11 ¼ Degree Bend, DI, C153, Epoxy-Lined, Bituminous Coated				
93	12” 22 ½ Degree Bend, DI, C153, Epoxy-Lined, Bituminous Coated				
94	12” 45 Degree Bend, DI, C153, Epoxy-Lined, Bituminous Coated				
95	12” 90 Degree Bend, DI, C153, Epoxy-Lined, Bituminous Coated				
96	12” Tee, DI, C153, Epoxy-Lined, Bituminous Coated				
97	12” Cross, DI, C153, Epoxy-Lined, Bituminous Coated				
98					
99	12” HDPE				

Total Constructed Value: _____

Reviewer:_____ Date:_____

Comments_____

CHAPTER 5 WASTEWATER

Section 550-K SCADA Panel I/O Listing September 2014

Type 1 Control Panel				
Typical Hardwired I/O Description	**Digital Inputs**	**Digital Outputs**	**Analog Inputs**	**Analog Outputs**
Control Power Alarm	1			
Control Valve Closed	1			
Control Valve Open	1			
Station Power Alarm	1			
Intrusion Alarm	1			
Main Surge Suppressor Fail	1			
Control Panel Surge Suppressor Fail	1			
UPS Fail	1			
Flow			1	
Pressure Influent			1	
Pressure Effluent			1	
Control Valve Position Feedback			1	
Control Valve Position Command				1
Used I/O	**8**	**0**	**4**	**1**
Estimated Spare I/O	**8**	**0**	**4**	**3**
TOTAL HARDWIRED I/O	**16**	**0**	**8**	**4**

Type 2 Control Panel: Constant Speed Pump Lift Station

Typical Hardwired I/O Description	Digital Inputs	Digital Outputs	Analog Inputs	Analog Outputs
Control Power Alarm	1			
Low-Low Level, All Pumps Off (ball float)	1			
High Level Alarm, All Pump Start PLC (ball float)	1			
High-High Level Alarm, All Pump Start Hardwired Override (ball float)	1			
Station Power Alarm	1			
Intrusion Alarm	1			
Main Surge Suppressor Fail	1			
Control Panel Surge Suppressor Fail	1			
UPS Fail	1			
Pump 1 Run Status	1			
Pump 2 Run Status	1			
Pump 3 Run Status, etc.	1			
Pump 1 Fault Status	1			
Pump 2 Fault Status	1			
Pump 3 Fault Status, etc.	1			
Pump 1 Remote Status	1			
Pump 2 Remote Status	1			
Pump 3 Remote Status, etc.	1			
Manual Transfer Switch Utility Power Available, Where Available*	1			
Generator Running Status, Where available*	1			
Generator Fault, Where Available*	1			
Fuel Tank Low-Low Level*	1			
Fuel Tank High-High Level*	1			
Fuel Transmitter Fault*	1			
Pump 1 Run Command		1		
Pump 2 Run Command		1		
Pump 3 Run Command, etc.		1		
Alarm Horn Silence		1		
Wet Well Level			1	
Generator Fuel Tank Level*			1	
Flow, Where Required			1	
Pressure, Where Required			1	

Used I/O	**24**	**4**	**4**	**0**
Estimated Spare I/O	**8**	**12**	**0**	**0**
TOTAL HARDWIRED I/O	**32**	**16**	**4**	**0**

Notes:
* Provide additional generator, transfer switch, and fuel system monitoring where available and as specified in other Utility Code Sections such as generator oil, temperature and cranking faults, and transfer switch position status and fail alarms. At the option of the Contractor, these signals may be communicated via digital communications such as Ethernet or serial Modbus.
1. Provide specific I/O as required for each individual site and modify total quantities as necessary.

Type 2 Control Panel: Constant Speed Pump Lift Station

Typical Ethernet I/O Description	Digital Inputs	Digital Outputs	Analog Inputs	Analog Outputs
Power Phase Monitor Alarm Pump 1	1			
Power Phase Monitor Alarm Pump 2	1			
Power Phase Monitor Alarm Pump 3, etc.	1			
Motor Controller General Fail Pump 1	1			
Motor Controller General Fail Pump 2	1			
Motor Controller General Fail Pump 3, etc.	1			
Motor Controller Reset Pump 1		1		
Motor Controller Reset Pump 2		1		
Motor Controller Reset Pump 3, etc.		1		
Amps Pump 1			1	
Amps Pump 2			1	
Amps Pump 3, etc.			1	
Power Pump 1, Where Available			1	
Power Pump 2, Where Available			1	
Power Pump 3, etc., Where Available			1	
TOTAL ETHERNET I/O	**6**	**3**	**6**	**0**

Notes:
1. Provide Generator related I/O in this category where I/O is communicated via digital communications.
2. Motor controller resets are automatic for the first failure and manual for all other occurrences as required.

Type 3 Control Panel: Variable Speed Pump Lift Station				
Typical Hardwired I/O Description	**Digital Inputs**	**Digital Outputs**	**Analog Inputs**	**Analog Outputs**
Control Power Alarm	1			
Low-Low Level, All Pumps Off (ball float)	1			
High Level Alarm, All Pump Start PLC (ball float)	1			
High-High Level Alarm, All Pump Start Hardwired Override (ball float)	1			
Station Power Alarm	1			
Intrusion Alarm	1			
Main Surge Suppressor Fail	1			
Control Panel Surge Suppressor Fail	1			
UPS Fail	1			
Pump 1 Run Status	1			
Pump 2 Run Status	1			
Pump 3 Run Status, etc.	1			
Pump 1 Fault Status	1			
Pump 2 Fault Status	1			
Pump 3 Fault Status, etc.	1			
Pump 1 Remote Status	1			
Pump 2 Remote Status	1			
Pump 3 Remote Status, etc.	1			
Manual Transfer Switch Utility Power Available, where available*	1			
Generator Running Status, Where Available*	1			
Generator Fault, Where Available*	1			
Fuel Tank Low-Low Level*	1			
Fuel Tank High-High Level*	1			
Fuel Transmitter Fault*	1			
Pump 1 Run Command		1		
Pump 2 Run Command		1		
Pump 3 Run Command, etc.		1		
Alarm Horn Silence		1		
Wet Well Level			1	
Generator Fuel Tank Level*			1	
Flow, Where Required			1	
Pressure, Where Required			1	
Pump 1 Speed Command				1

Pump 2 Speed Command				1
Pump 3 Speed Command, etc.				1
Used I/O	**24**	**4**	**4**	**3**
Estimated Spare I/O	**8**	**12**	**1**	**1**
TOTAL HARDWIRED I/O	**32**	**16**	**5**	**4**

Notes:
* Provide additional generator, transfer switch, and fuel system monitoring where available and as specified in other Utility Code Sections such as generator oil, temperature and cranking faults, and transfer switch position status and fail alarms. At the option of the Contractor, these signals may be communicated via digital communications such as Ethernet or serial Modbus.
1. Provide specific I/O as required for each individual site and modify total quantities as necessary.

Type 3 Control Panel: Variable Speed Pump Lift Station				
Typical Ethernet I/O Description	**Digital Inputs**	**Digital Outputs**	**Analog Inputs**	**Analog Outputs**
Power Phase Monitor Alarm Pump 1	1			
Power Phase Monitor Alarm Pump 2	1			
Power Phase Monitor Alarm Pump 3, etc.	1			
Motor Controller General Fail Pump 1	1			
Motor Controller General Fail Pump 2	1			
Motor Controller General Fail Pump 3, etc.	1			
Motor Controller Reset Pump 1		1		
Motor Controller Reset Pump 2		1		
Motor Controller Reset Pump 3, etc.		1		
Pump 1 Speed Feedback			1	
Pump 2 Speed Feedback			1	
Pump 3 Speed Feedback, etc.			1	
Amps Pump 1			1	
Amps Pump 2			1	
Amps Pump 3, etc.			1	
Power Pump 1			1	
Power Pump 2			1	
Power Pump 3, etc.			1	
Torque Pump 1			1	
Torque Pump 2			1	
Torque Pump 3, etc.			1	
Total Ethernet I/O	**6**	**3**	**12**	**0**

Notes:
1. Provide Generator related I/O in this category where I/O is communicated via digital communications.
2. Motor controller resets are automatic for the first failure and manual for all other occurrences as required.

CHAPTER 5 WASTEWATER

Section 550-L Gravity Main Low-Pressure Air Test Form (PVC and Ductile Iron Pipe) October 2015

Project: _____

PCU Project No.: _____

Procedures for conducting this test shall be in strict conformance with UNI-B-6 Uni-Bell standards for testing gravity sewer main lines.

Date:_____ Specified Maximum Pressure Drop:_____psig

TESTING PARAMETERS & SYSTEM INFORMATION

Specified Maximum Pressure Drop
Date of Test
Identification of Pipe Material Installed

Pipe Under Test				**Spec Time**	**Field Test Operations Data**					
Upstream MH #	Downstream MH #	Dia D (in.)	Length L (ft.)	Refer to UNI-B-6 (min:sec)	Pressure Initially Raised to (psig)	Time Allowed for Pressure to Stabilize	Start Test Pressure (psig)	Stop Test Pressure (psig)	Elapsed Time (min:sec)	Pass or Fail (P or F)

CONTRACTOR & INSPECTOR PERSONNEL INFORMATION

	Contractor	Inspector
Signature:		
Printed Name:		
Company Name:		
Phone Number:		
Date:		

This test form was derived from UNI-B-6-98, Appendix 2, Air Test Data Sheet. The purpose of this form is to assist in obtaining information from field testing of wastewater pipes as well as to assist in evaluating acceptability of construction.

Leakage testing shall be conducted in accordance with the procedure for "Recommended Practice for Low Pressure Air Testing of Installed Sewer Pipe" as established by the Uni-Bell PVC Pipe Association. The pipe shall pass the current most stringent UNI-B-6 Uni-Bell standards for testing gravity sewers and shall have no evidence of leaks in the pipe or connections.

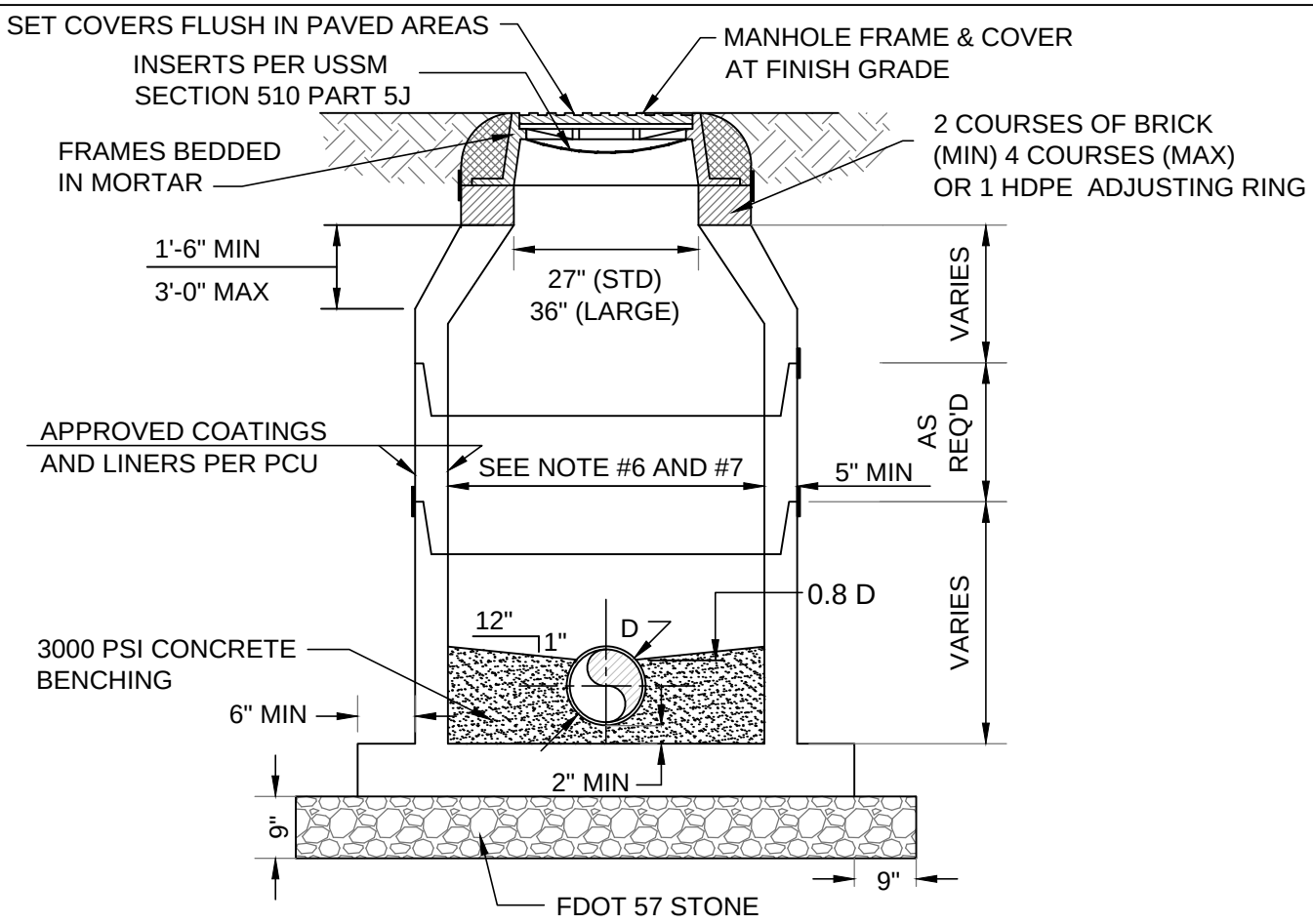

NOT TO SCALE

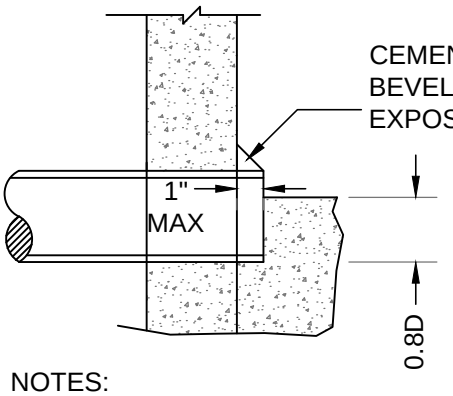

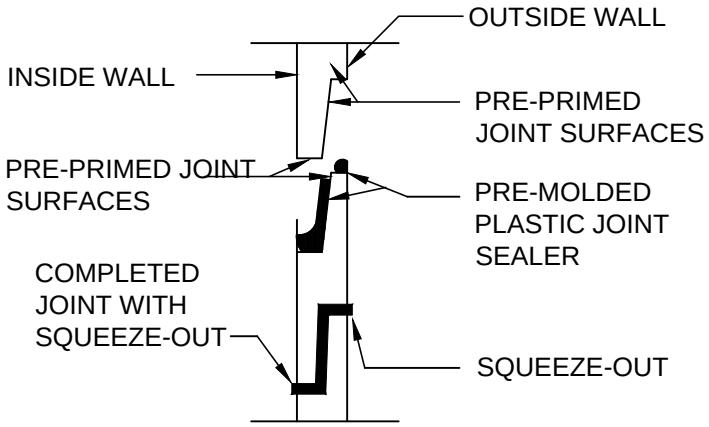

NOTES:

1. INTERIOR DROP CONNECTIONS ARE REQUIRED WHENEVER THE INVERT OF THE INFLUENT SEWER IS 24" OR MORE ABOVE THE INVERT OF THE MANHOLE. THE DIAMETER OF THE DROP MANHOLE SHALL BE 5'-0".
2. ECCENTRIC CONE DESIGN MAY BE USED AS AN ALTERNATIVE, AS APPROVED.
3. A FLOW CHANNEL SHALL BE CONSTRUCTED INSIDE MANHOLE TO DIRECT INFLUENT INTO FLOW STREAM.
4. LIFT HOLES THROUGH STRUCTURE ARE NOT PERMITTED.
5. HDPE ADJUSTING RINGS MAY BE SUBSTITUTED FOR BRICK RISERS.
6. MASTER MANHOLES SHALL BE 5'-0" DIAMETER.
7. MANHOLE DIAMETER SHALL BE 4'-0" MIN FOR MAINS 8" TO 24" (STD), 5'-0" MIN FOR MAINS 24" TO 36" AND 6'-0" MIN FOR SEWER 36" AND LARGER. .

REV. : NOVEMBER 2013

PRECAST CONCRETE MANHOLE (TYPICAL)	**FIGURE WW-01-1**
POLK COUNTY UTILITIES, FLORIDA	**DECEMBER, 2010**

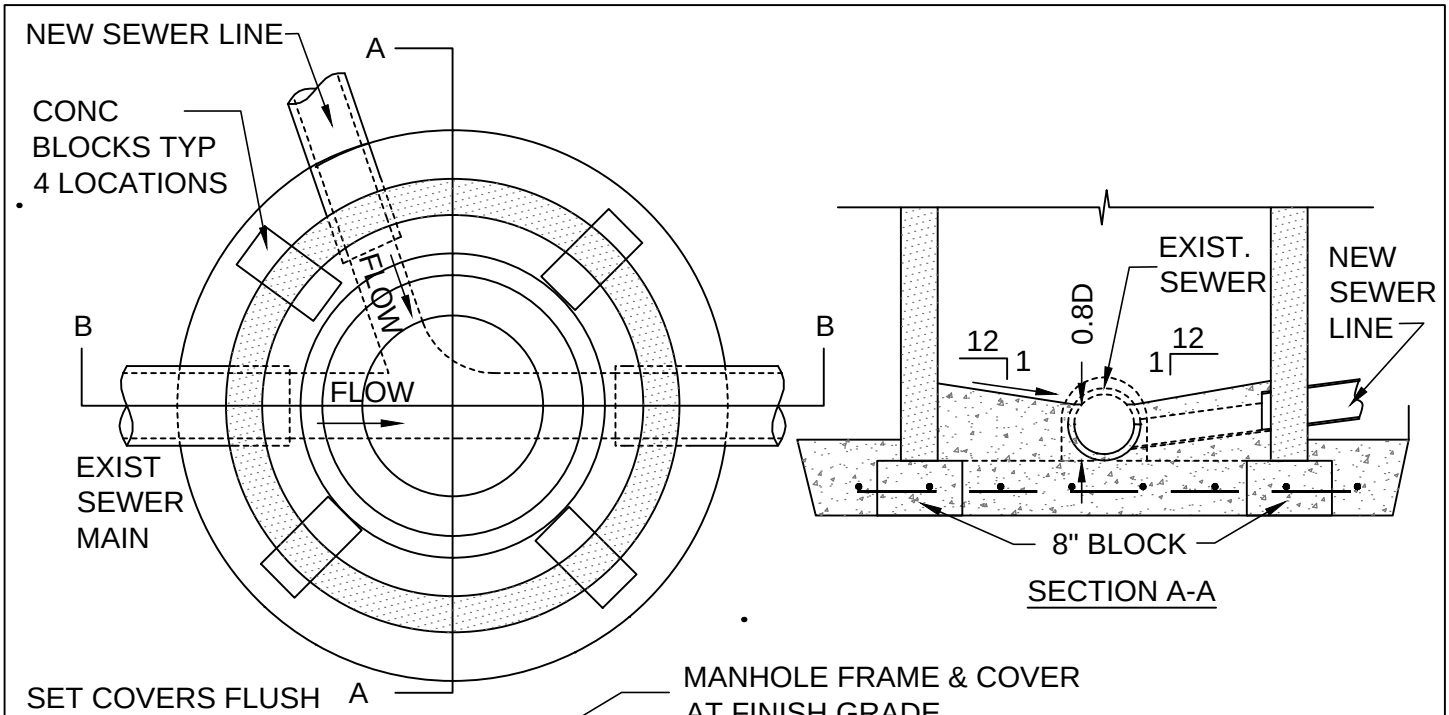

SECTION A-A

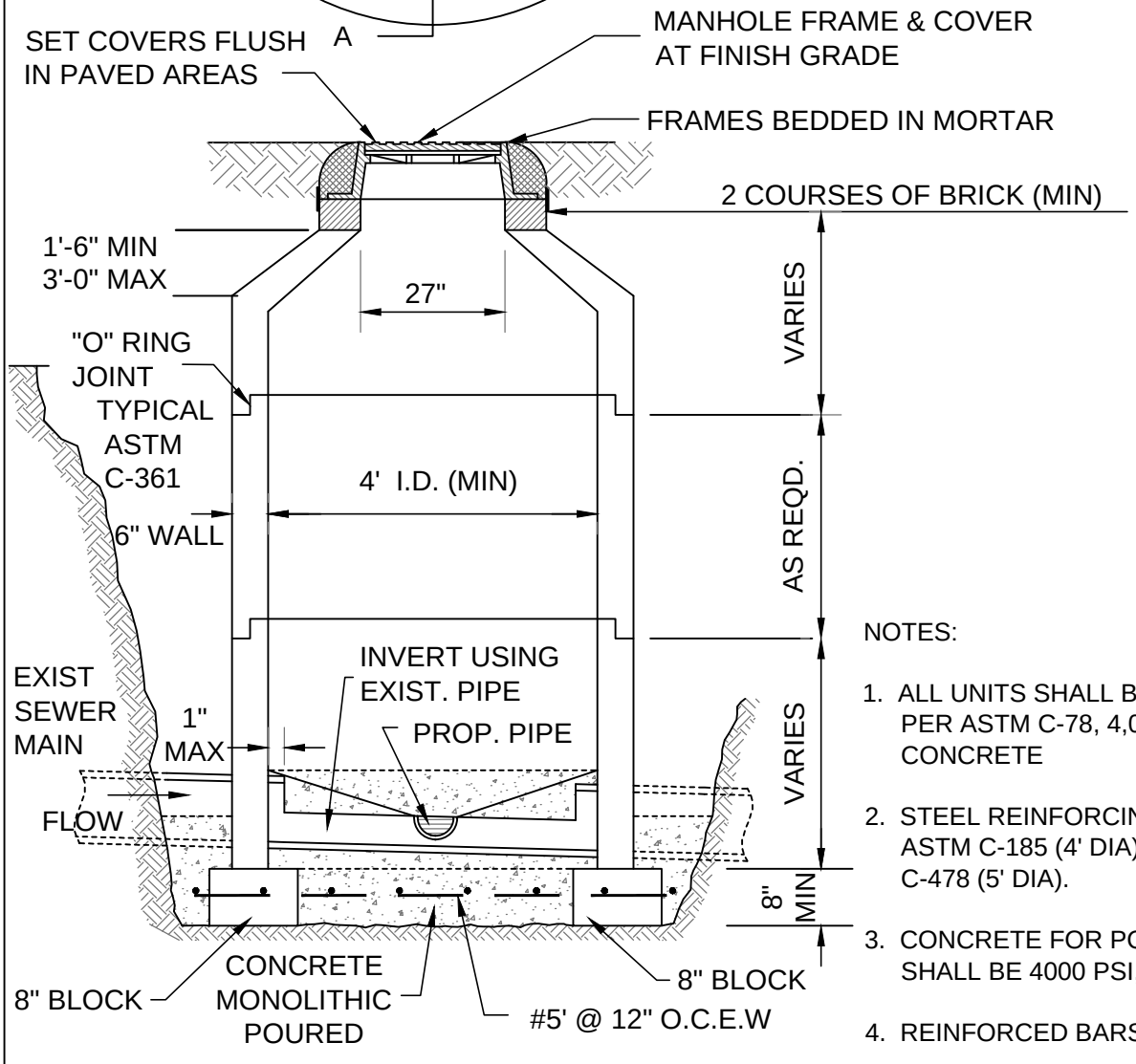

SECTION B-B

NOTES:

1. ALL UNITS SHALL BE PRE-CAST PER ASTM C-78, 4,000 PSI CONCRETE
2. STEEL REINFORCING SHALL MEET ASTM C-185 (4' DIA) OR ASTM C-478 (5' DIA).
3. CONCRETE FOR POURED BASE SHALL BE 4000 PSI, ASTM C-478.
4. REINFORCED BARS TO BE GRADE 60.
5. USE FLEXIBLE SEAL AROUND EXIST SEWER AT NEW WALL, THEN GROUT WITH NON-SHRINK GROUT.

DOGHOUSE CONCRETE MANHOLE CONNECTION	**FIGURE WW-01-2**
POLK COUNTY UTILITIES, FLORIDA	**DECEMBER, 2010**

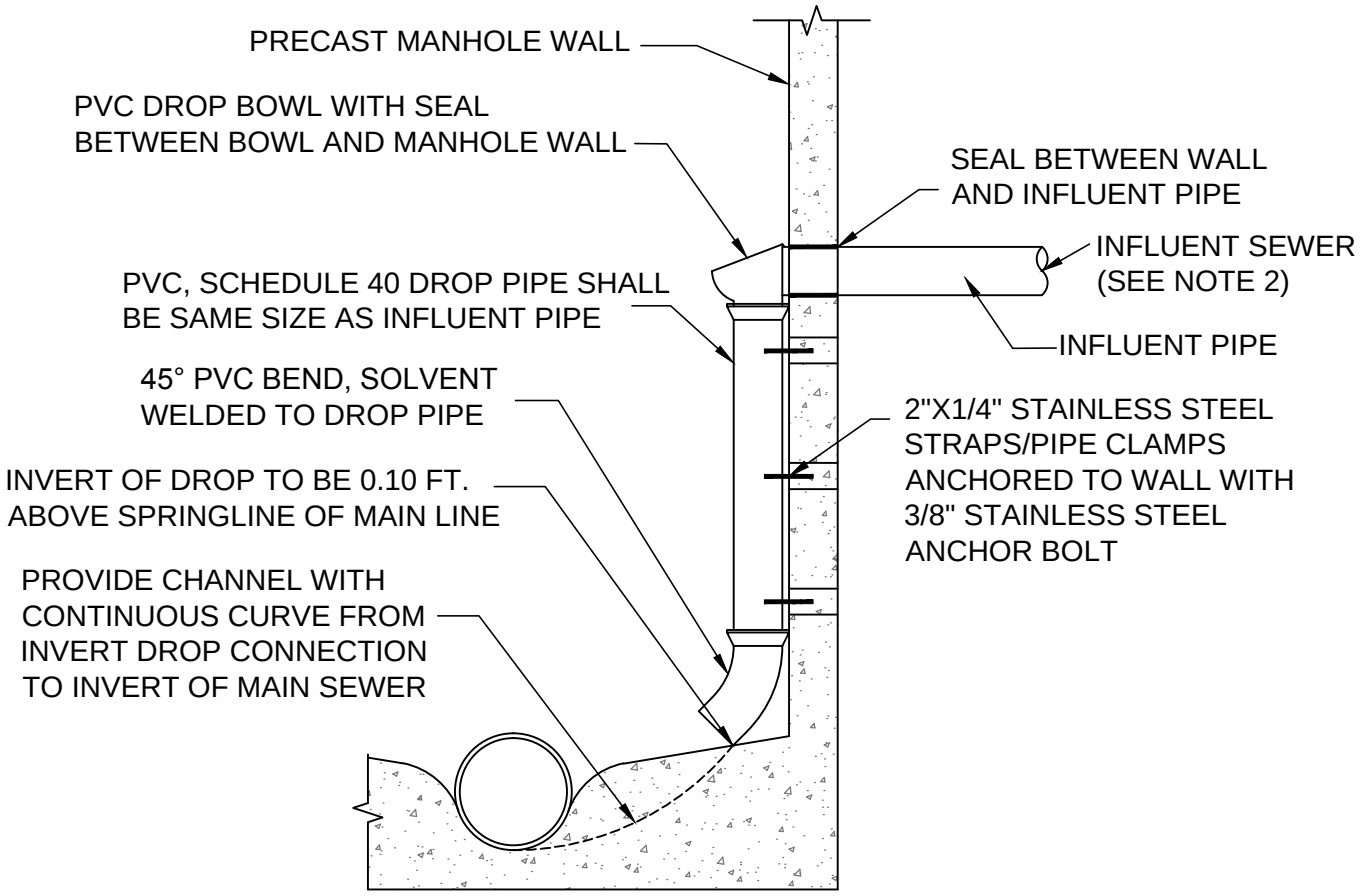

MANHOLE STANDARD INTERIOR DROP CONNECTION

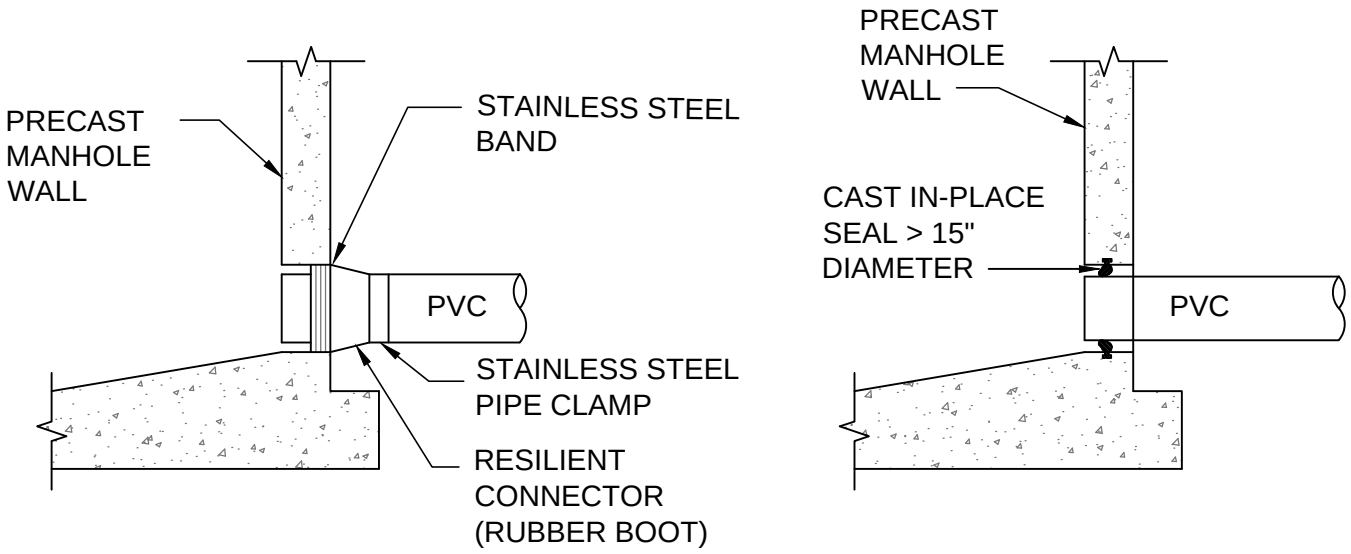

STANDARD PRECAST MANHOLE PIPE CONNECTION

NOTES:

1. DROP PIPE AND FITTINGS SHALL BE OF EQUAL SIZE AS THE INFLUENT SEWER.
2. INSIDE DROP CONNECTIONS SHALL BE REQUIRED FOR ALL INFLUENT LINES WHICH HAVE AN INVERT 2' OR MORE ABOVE THE MANHOLE INVERT.
3. ALTERNATE WATER TIGHT CONNECTION DETAILS FOR CONNECTION OF 24" DIAMETER PIPES AND LARGER MUST BE APPROVED BY PCU.

MANHOLE CONNECTION	**FIGURE WW-02**
POLK COUNTY UTILITIES, FLORIDA	**DECEMBER, 2010**

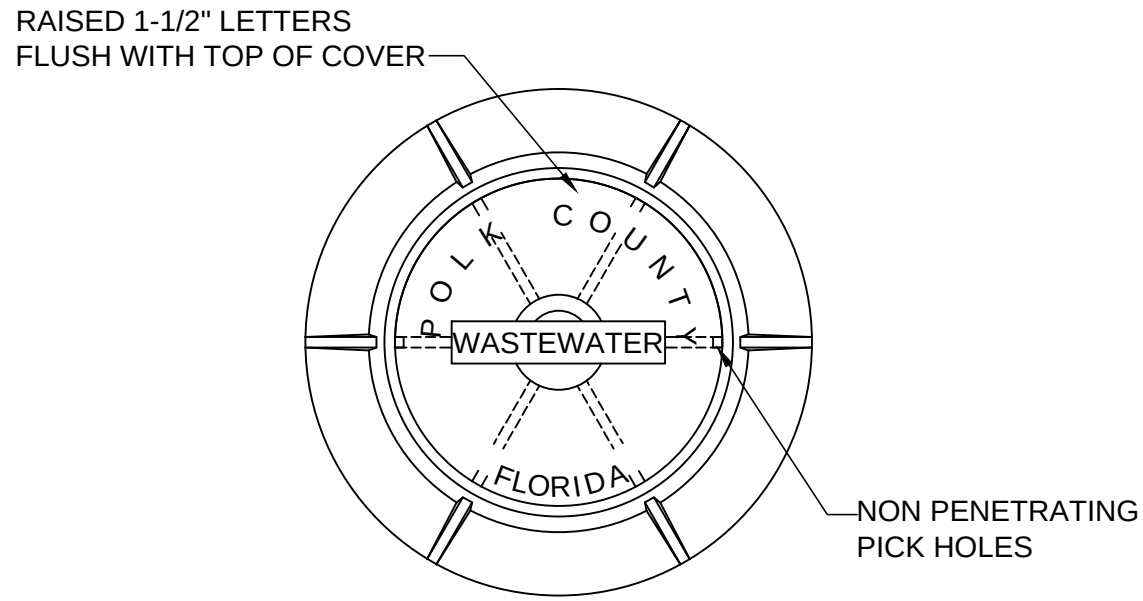

PLAN

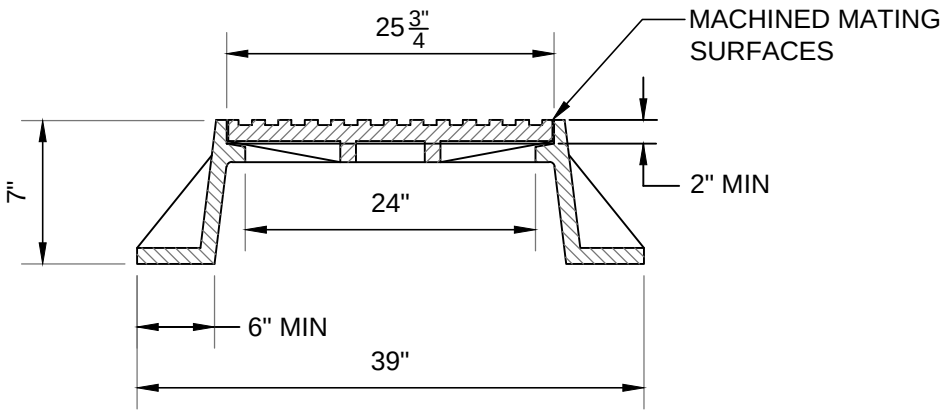

ELEVATION
(MANHOLE INSERT NOT SHOWN)

NOTES:

1. THE WORDS 'POLK COUNTY' SHALL NOT BE USED ON PRIVATE MANHOLES.
2. RING SHALL RECEIVE 2 COATS OF BITUMINOUS (COAL TAR) EPOXY PRIOR TO INSTALLATION.
3. ALL MANHOLE COVER AND FRAME SETS SHALL INCLUDE AN APPROPRIATE SIZED INSERT.
4. ALL MATERIALS SHALL BE IN ACCORDANCE WITH THE APPROVED MATERIALS CHECKLIST.

STANDARD MANHOLE FRAME AND COVER SET (FOUR FOOT INSIDE DIAMETER MANHOLE)	**FIGURE WW-03-1**
POLK COUNTY UTILITIES, FLORIDA	**DECEMBER, 2010**

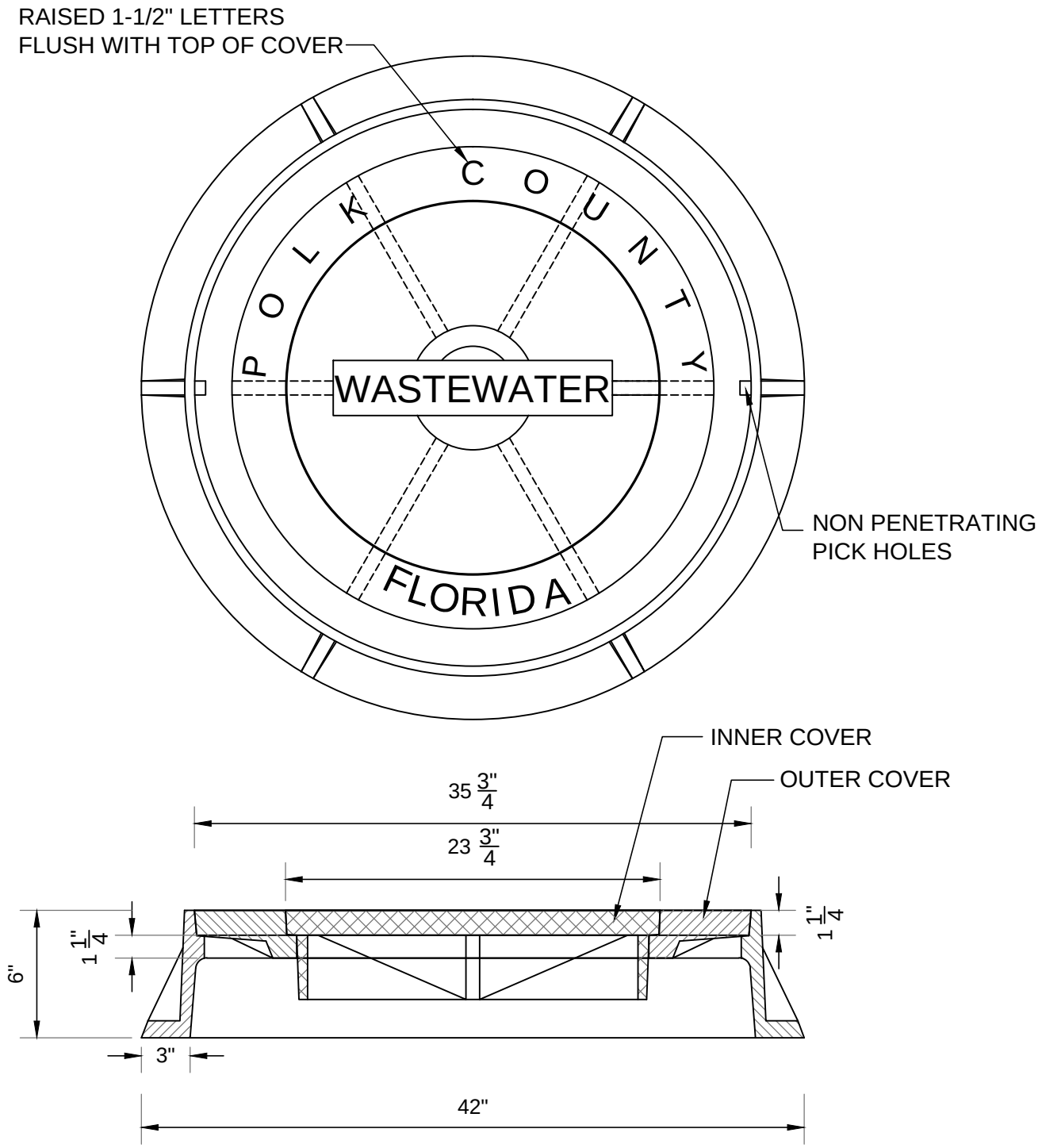

ELEVATION

NOTES:

1. THE WORDS 'POLK COUNTY' SHALL NOT TO USED ON PRIVATE MANHOLES.
2. RING SHALL RECEIVE 2 COATS OF BITUMINOUS (COAL TAR) EPOXY PRIOR TO INSTALLATION.
3. ONLY THE INNER COVER OF THIS MANHOLE COVER AND FRAME SET SHALL INCLUDE AN APPROPRIATE SIZED INSERT.
4. ALL MATERIALS SHALL BE IN ACCORDANCE WITH THE APPROVED MATERIALS CHECKLIST.

LARGE MANHOLE FRAME AND COVER SET (LARGE MANHOLES - FIVE FOOT AND LARGER INSIDE DIAMETER)	**FIGURE WW-03-2**
POLK COUNTY UTILITIES, FLORIDA	**DECEMBER, 2010**

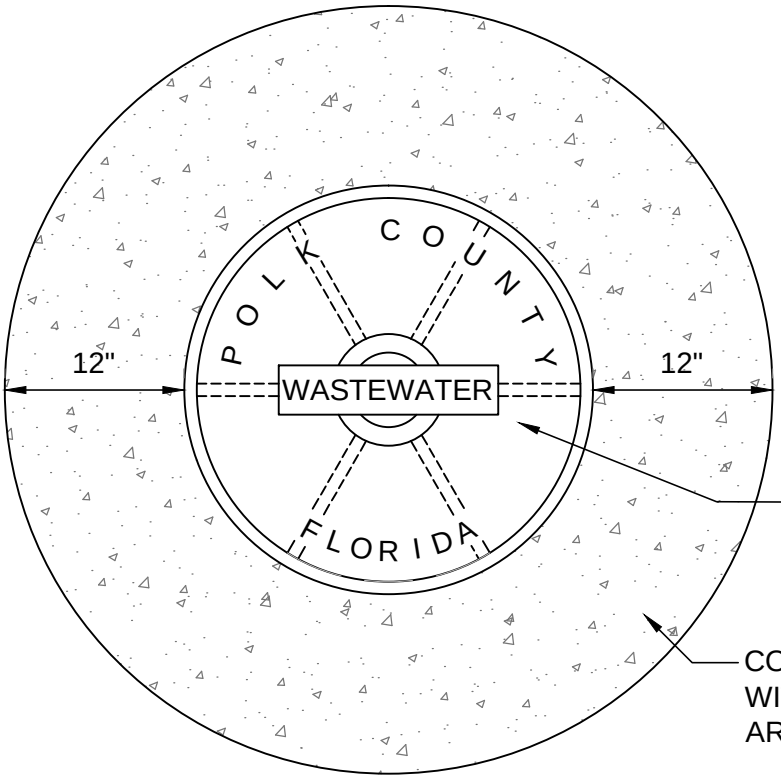

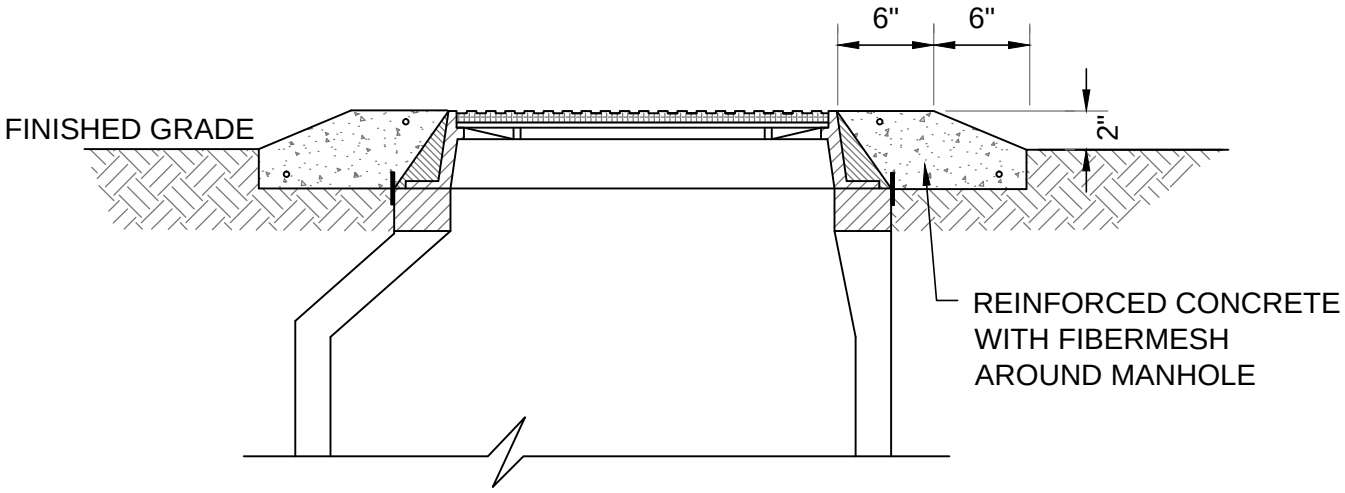

NOTES:

1. THE WORDS 'POLK COUNTY' SHALL NOT APPEAR ON PRIVATE MANHOLES.

2. AREAS SUPPORTING CONCRETE COLLAR SHALL BE PROPERLY COMPACTED, TO 95 % MAXIMUM DENSITY PER AASHTO T-180 FOR FIRST 6" UNDER THE COLLAR AREA.

MANHOLE IN NON-PAVED AREA	**FIGURE WW-04**
POLK COUNTY UTILITIES, FLORIDA	**DECEMBER, 2010**

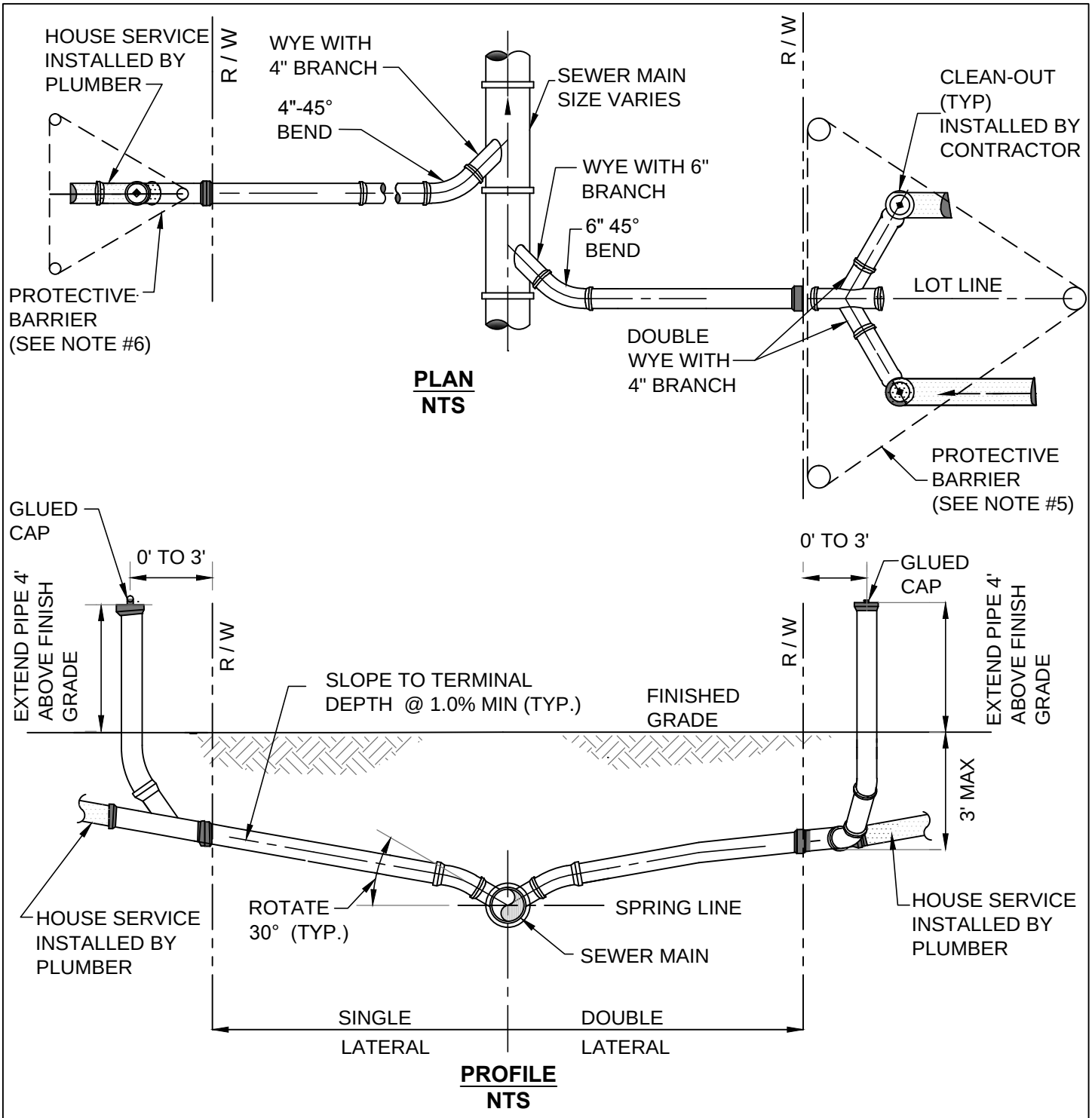

NOTES:

1. INVERT OF SERVICE LATERAL SHALL NOT ENTER SEWER MAIN BELOW SPRING LINE.
2. SERVICE LATERAL CLEAN OUT PIPE SHALL BE EXTENDED AND CAPPED BY CONTRACTOR.
3. ALL FITTINGS SHOWN ARE TO BE INSTALLED.
4. BUILDER'S PLUMBER WILL REMOVE PLUG, ADJUST CLEAN OUT PIPE TO GRADE, AND CONNECT SERVICE LATERAL TO HOUSE.
5. PROTECTIVE BARRIER TO BE 3-2" x4" or 2" POLES w/ WITH RED CONSTRUCTION WARNING FENCE OR TAPE.

REV. : NOVEMBER 2013

SERVICE LATERAL (STANDARD)	FIGURE WW-05-1
POLK COUNTY UTILITIES, FLORIDA	DECEMBER, 2010

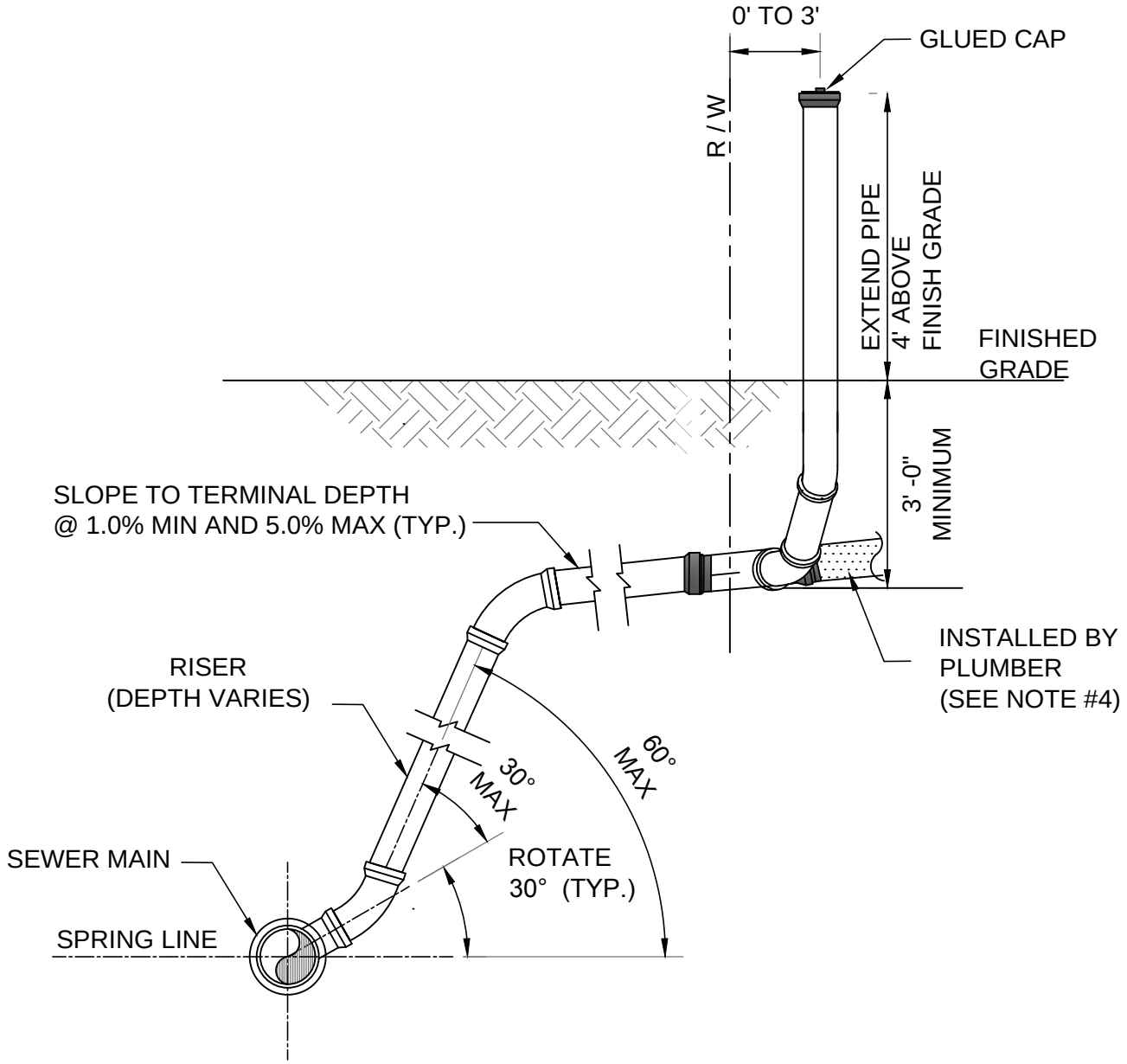

PROFILE
NTS

NOTES:

1. INVERT OF SERVICE LATERAL SHALL NOT ENTER SEWER MAIN BELOW SPRING LINE.
2. SERVICE LATERAL CLEAN OUT PIPE SHALL BE EXTENDED AND CAPPED BY CONTRACTOR.
3. ALL FITTINGS SHOWN ARE TO BE INSTALLED.
4. BUILDER'S PLUMBER WILL REMOVE PLUG, ADJUST CLEAN OUT PIPE TO GRADE, AND CONNECT SERVICE LATERAL TO HOUSE.

REV. : NOVEMBER 2013

SEWER SERVICE (DEEP) (TYPICAL)	**FIGURE WW-5-2**
POLK COUNTY UTILITIES, FLORIDA	**DECEMBER, 2010**

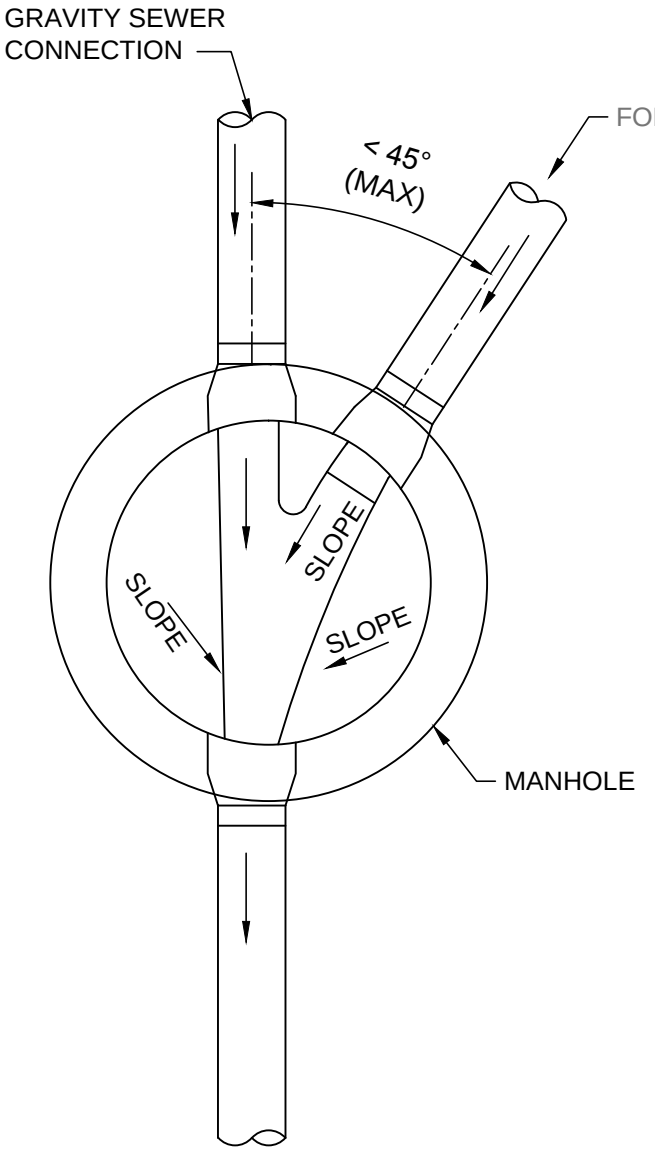

PLAN VIEW

NOTES:

1. FORCE MAIN SHALL BE ORIENTED NORMALLY 45° OR LESS TO FLOW TO FACILITATE FLOW AND SHALL ENTER MANHOLE AT THE FLOW LINE.

2. PROVIDE BENCHING AS REQUIRED FOR FORCE MAIN.

3. MANHOLE RECEIVING FORCE MAIN SHALL BE COATED WITH SPECIALIZED COATING OR FACTORY INSTALLED LINING.

4. FORCE MAIN CONNECTION DESIGN SHALL BE AS APPROVED BY PCU.

FORCE MAIN TO GRAVITY SEWER MANHOLE CONNECTION (TYPICAL)	**FIGURE WW-06-1**
POLK COUNTY UTILITIES, FLORIDA	**DECEMBER, 2010**

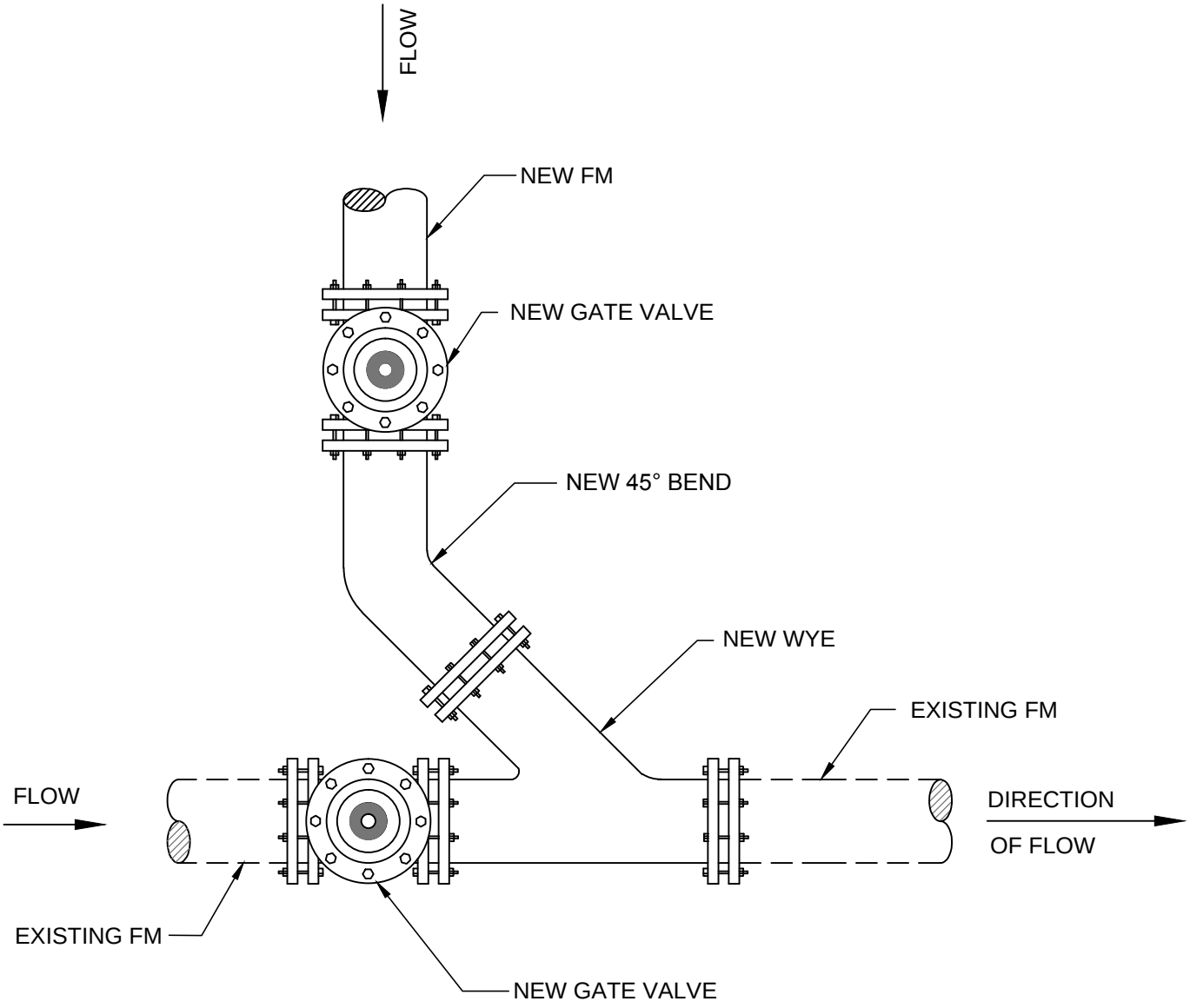

PLAN VIEW

NOTES:

1. ALL JOINTS (INCLUDING JOINTS ON EXISTING MAINS) SHALL BE RESTRAINED IN ACCORDANCE WITH USSM CHAPTER 3. ENGINEER SHALL VERIFY DESIGN ASSUMPTIONS AND INCREASE RESTRAINED LENGTHS AS REQUIRED.

FORCE MAIN MANIFOLD CONNECTION (TYPICAL)	**FIGURE WW-06-2**
POLK COUNTY UTILITIES, FLORIDA	**NOVEMBER, 2013**

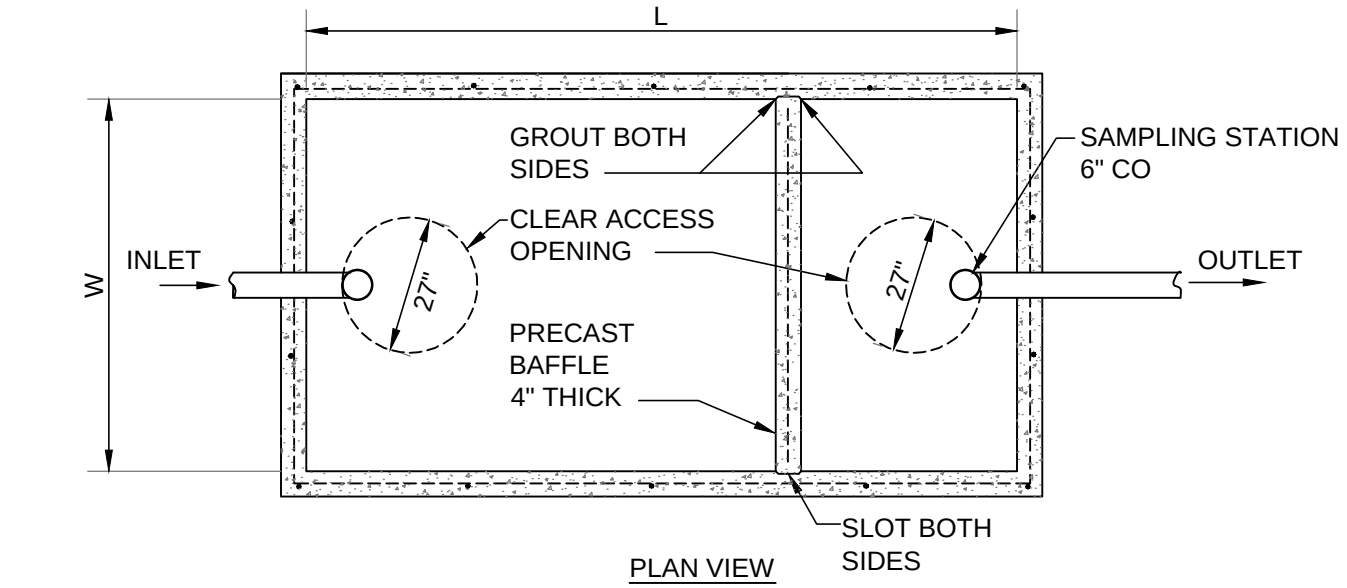

PLAN VIEW

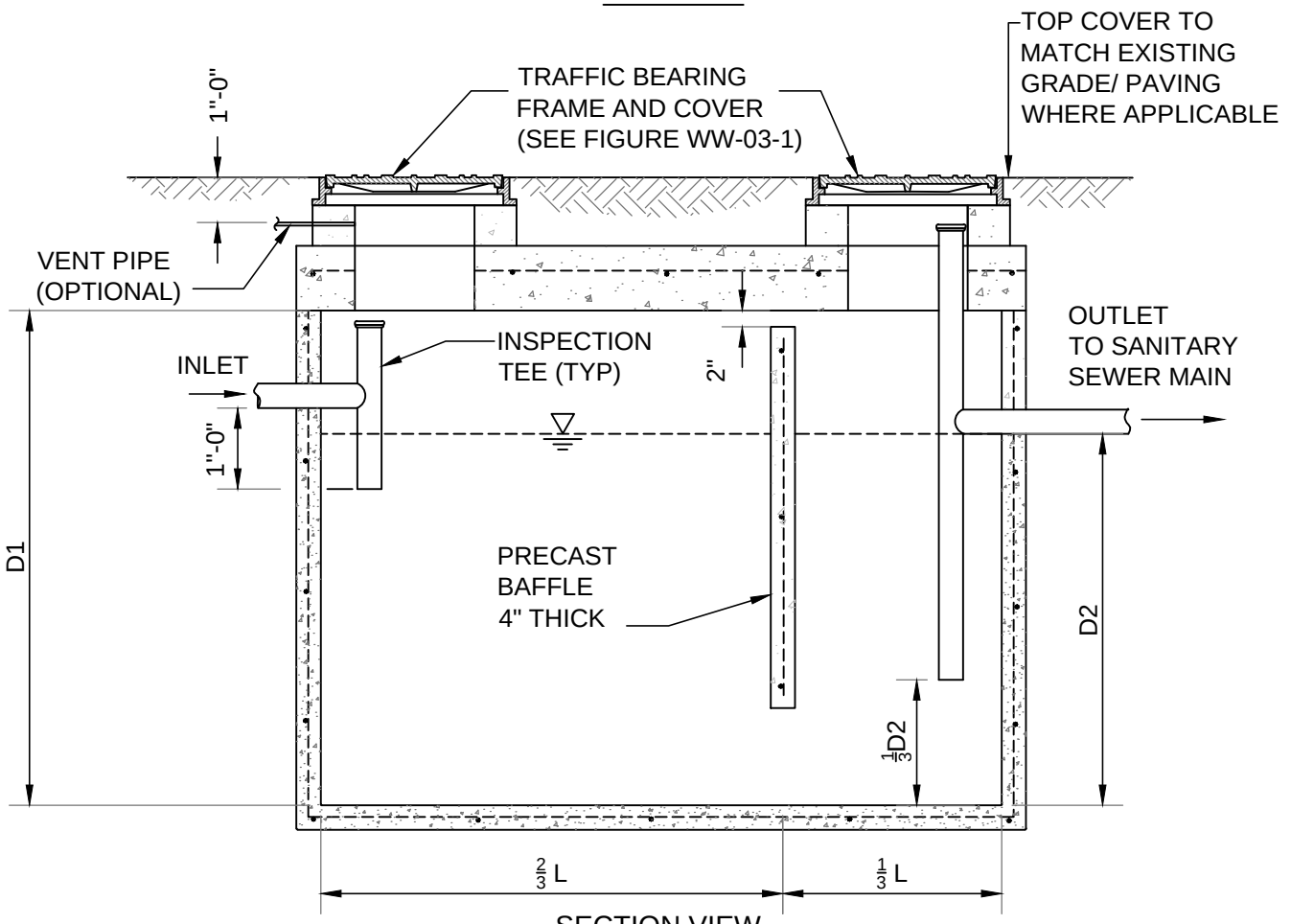

SECTION VIEW

NOTES:

1. SIZE AND DIMENSIONS OF GREASE INTERCEPTOR SHALL BE IN ACCORDANCE WITH THE UTILITIES STANDARDS AND SPECIFICATIONS MANUAL.
2. LOADS: H-20 TRUCK WHEELS WITH 30% IMPACT PER AASHTO.

LEGEND :

L = INSIDE LENGTH
W = INSIDE WIDTH
D1 = DISTANT FROM INSIDE TOP OF STRUCTURE TO INSIDE BOTTOM OF STRUCTURE
D2 = DISTANT FROM OUTLET INVERT TO STRUCTURE INVERT

GREASE INTERCEPTOR (TYPICAL)	FIGURE WW-07
POLK COUNTY UTILITIES, FLORIDA	DECEMBER, 2010

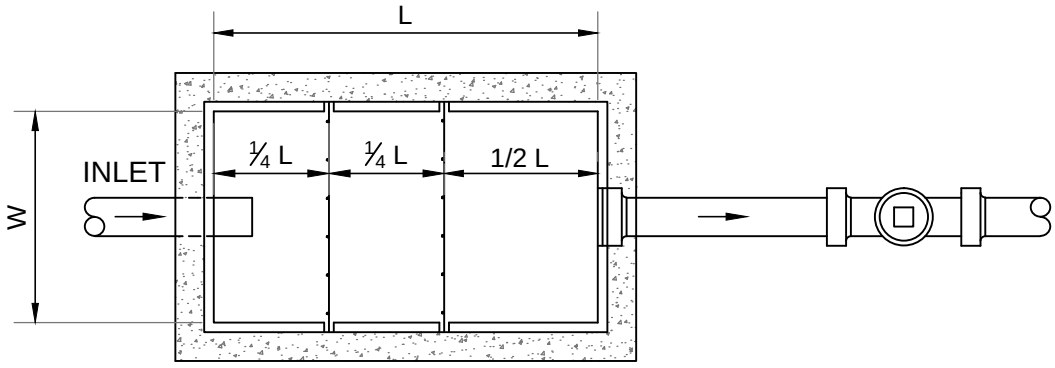

PLAN

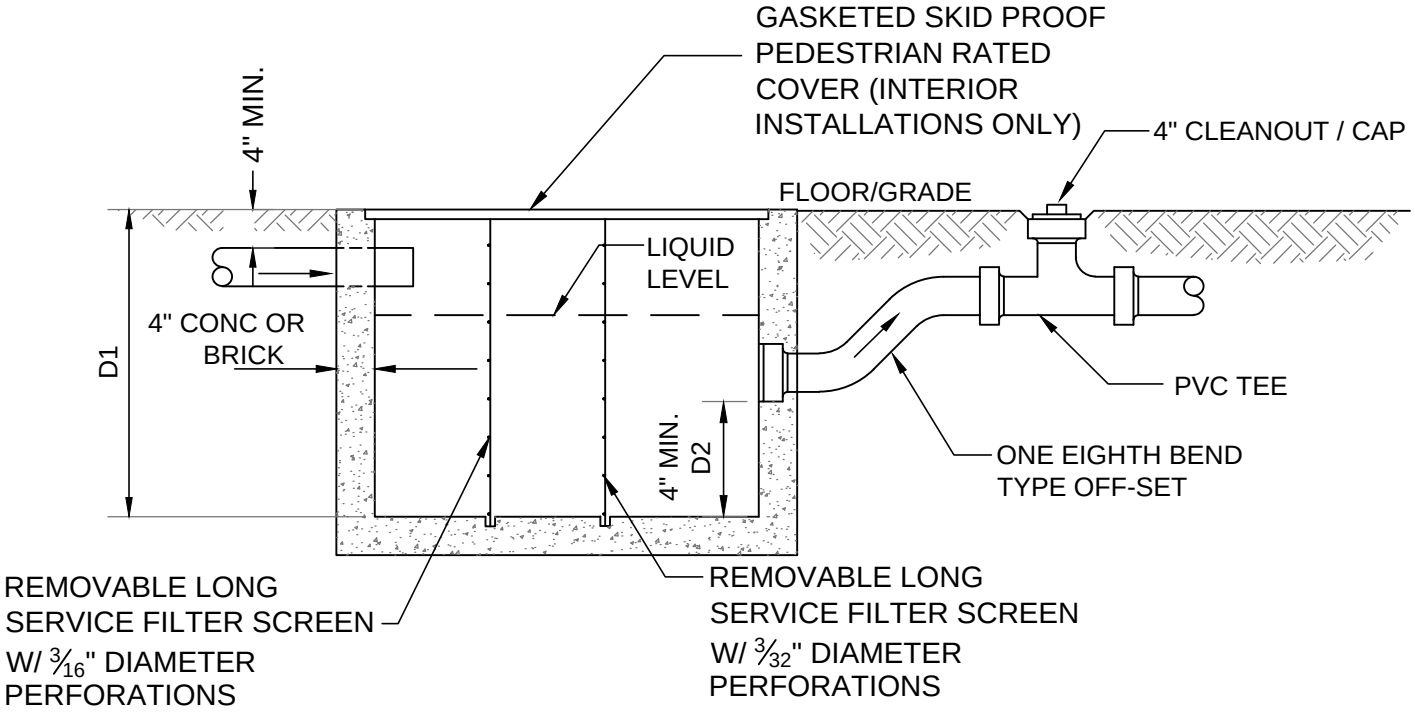

SECTION

NOTES:

1. EXTERIOR INSTALLED TRAPS SHALL BE DESIGNED FOR HS-20 TRAFFIC LOADS.

LEGEND :

L = INSIDE LENGTH
W = INSIDE WIDTH
D1 = DISTANT FROM INSIDE TOP OF STRUCTURE TO INSIDE BOTTOM OF STRUCTURE
D2 = DISTANT FROM OUTLET INVERT TO STRUCTURE INVERT

LINT / HAIR TRAP INTERCEPTOR (TYPICAL)	**FIGURE WW-08**
POLK COUNTY UTILITIES, FLORIDA	**DECEMBER, 2010**

GENERAL NOTES:

1. ALL INTERIOR METAL SURFACES SHALL BE PAINTED WITH 2 COATS OF BITUMINOUS EPOXY PAINT.

2. EXTERIOR OF WET WELL SHALL RECEIVE TWO (2) COATS BITUMINOUS EPOXY.

3. INTERIOR OF WET WELL SHALL HAVE PCU APPROVED FACTORY INSTALLED LINER OR FIELD COATING.

4. VALVE VAULTS ARE ONLY TO BE USED WITH PRIOR PCU APPROVAL.

5. ALL LOCATIONS WHERE PIPES ENTER OR LEAVE THE WET WELL SHALL BE MADE WATER TIGHT BY USE OF A RUBBER TYPE PIPE BOOT w/ NON-SHRINK GROUT.

6. THERE SHALL BE NO VALVES OR ELECTRICAL JUNCTION BOXES EXCEPT FLOAT CABLES IN WET WELL.

7. WET WELL COVERS THAT ARE NOT SUBJECT TO VEHICULAR TRAFFIC SHALL BE (300 PSF RATED) ALUMINUM WITH 316 S.S. HARDWARE AND LOCK BRACKET. IF SUBJECT TO VEHICULAR TRAFFIC, WET WELL COVERS SHALL BE H-20 RATED. SIZE OF WET WELL COVER AS REQUIRED BY PUMP MANUFACTURER AND AS APPROVED BY PCU.

8. PUMPS 25 H.P. AND LARGER SHALL BE 240V/480V, 3-PHASE, W/ SOFT STARTS, SMALLER PUMPS SHALL BE 240V/480V, 3-PHASE, 60 Hz MOTOR, SUBMERSIBLE PUMP AS MANUFACTURED BY HYDROMATIC OR FLYGT ONLY. PUMP MUST BE CAPABLE OF PASSING 3" SOLIDS. ROTO PHASE POWER UNITS ARE STRICTLY PROHIBITED.
   MANUFACTURER: _____ MODEL: _____ IMP:_____ DIA: _____
   SPEED: _____ RPM, DISCHARGE SIZE: _____ IN., VOLTAGE _____, PHASE: 3Ø
   H.P. _____, MIN. SOLID SIZE: _____IN., CURVE: _____

9. OPERATING CONDITIONS SHALL BE _____GPM AT _____FEET TDH.

10. ALL HARDWARE IN WET WELL TO BE 316 STAINLESS STEEL.

11. 4" PLUG VALVES MAY HAVE LEVERS, ALL OTHERS SHALL HAVE GEARBOX W/ HAND WHEELS.

12. WET WELL SHALL BE PROVIDED WITH A GRATE BASED FALL PROTECTION SYSTEM.

13. ALL LOCATIONS WHERE GRAVITY PIPES ENTER OR LEAVE THE WET WELL SHALL BE MADE WATERTIGHT WITH AN APPROVED BOOT.

CONTINUED FIGURE WW-10

LIFT STATION NOTES **POLK COUNTY UTILITIES, FLORIDA**	**FIGURE** **WW-09**
POLK COUNTY UTILITIES, FLORIDA	**OCTOBER, 2015**

GENERAL NOTES (CONTINUED):

(SEE FIGURE WW-09 FOR NOTES 1 TO 13)

14. ALL LOCATIONS WHERE PRESSURE PIPES ENTER THE WET WELL SHALL BE MADE WATERTIGHT WITH A WALL SLEEVE AND SEAL OR NON-SHRINKAGE GROUT.

15. THERE SHALL BE NO VALVES OR ELECTRICAL JUNCTION BOXES EXCEPT FLOAT CABLES IN THE WET WELL.

16. ALL HARDWARE IN WET WELL SHALL BE 316 STAINLESS STEEL.

17. ALL CONNECTIONS IN THE WET WELL SHALL BE FLANGED JOINTS. ALL REMAINING CONNECTIONS BETWEEN THE WET WELL AND THE CONNECTION TO THE EXISTING FORCE MAIN SHALL BE RESTRAINED MECHANICAL JOINTS.

18. CHECK VALVE ARM SHALL BE LOCATED WITH THE SAME ORIENTATION (i.e. ALL ARMS ON THE LEFT SIDE OF VALVE).

19. ALL MATERIALS SHALL BE IN ACCORDANCE WITH THE " APPROVED MATERIALS CHECKLIST".

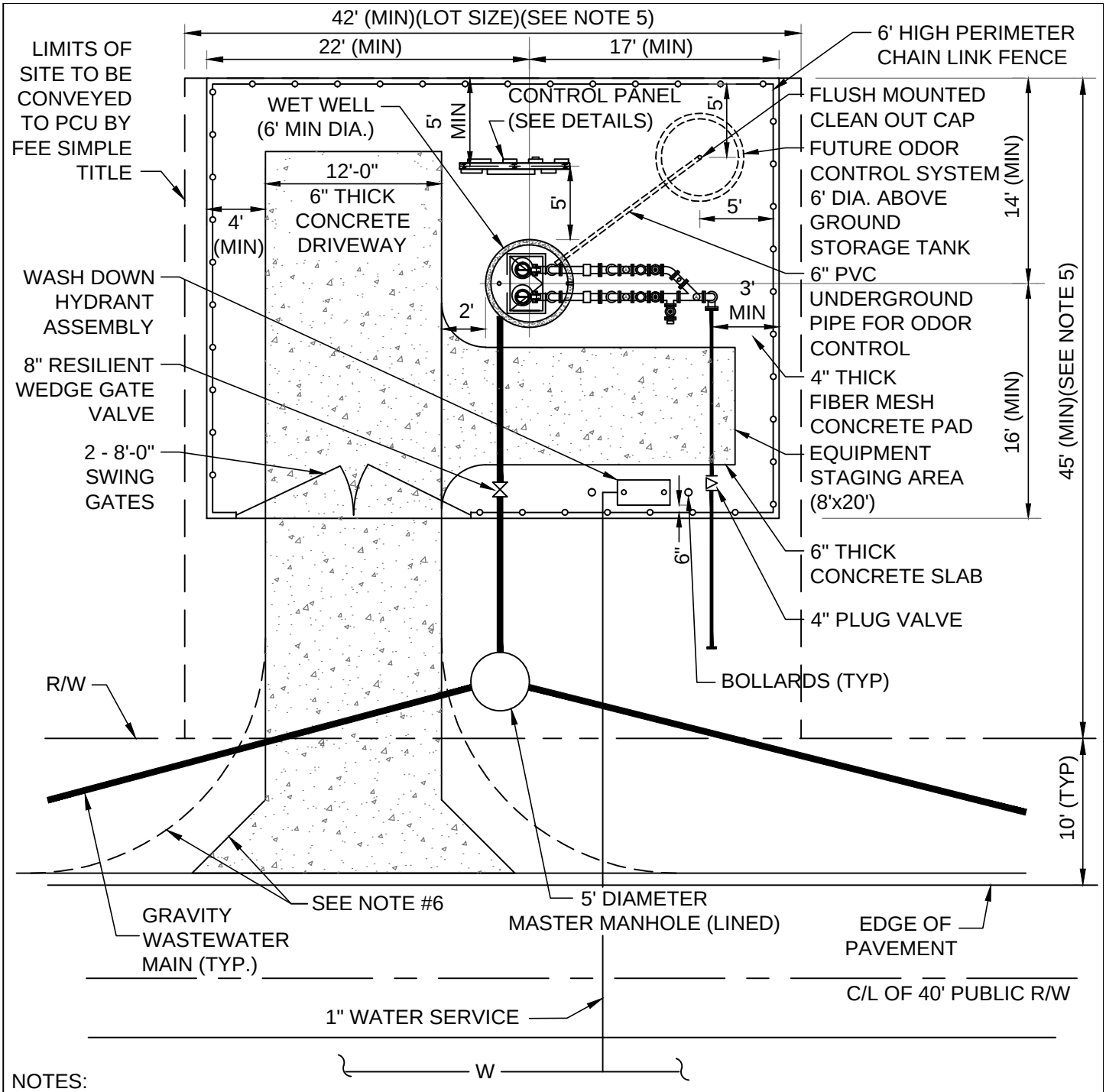

NOTES:

1. WET WELL OPENINGS SHALL BE PROVIDED WITH FALL PREVENTION DEVICES AS SPECIFIED IN THE "APPROVED MATERIALS CHECK LIST".
2. FENCING MAY BE REPLACED WITH OPTIONAL CONCRETE MASONRY WALL (SEE FIGURE WW-17-1)
3. SLOPE OF STATION PAD AND DRIVEWAY SHALL BE 1/8" PER 1' DOWN SLOPE (1.0%). FROM CENTER OF WET WELL TO PERIMETER OF STATION. .
4. MINIMUM DISTANCE BETWEEN FENCE AND ALL INSTALLED EQUIPMENT SHALL BE 5'.
5. THIS DIMENSION SHALL INCREASE 2.0' FOR EACH FOOT OF ADDITIONAL WET WELL DEPTH OVER 15'.
6. USE OF 20' RADIUS OR 5' FLARE OF DRIVEWAY AT ROADWAY SHALL BE DETERMINED BY THE SURROUNDING DRIVEWAY GEOMETRY.
7. ENGINEER SHALL PROVIDE A SCALED (1" = 20' MIN) SITE SPECIFIC DETAIL.
8. DISTANCE OF 5' SHALL BE MAINTAINED FROM THE OUTSIDE EDGE OF THE WET WELL AND THE OUTSIDE EDGE OF THE SUPPORT POSTS FOR THE CONTROL PANEL STRUCTURE.
9. IF GENERATOR REQUIRED IN ACCORDANCE WITH FDEP REQUIREMENTS, THE DESIGN OF THE LIFT STATION IS SUBJECT TO PCU APPROVAL.

DUPLEX LIFT STATION (TYPICAL) SITE PLAN	**FIGURE WW-11**
POLK COUNTY UTILITIES, FLORIDA	**OCTOBER, 2015**

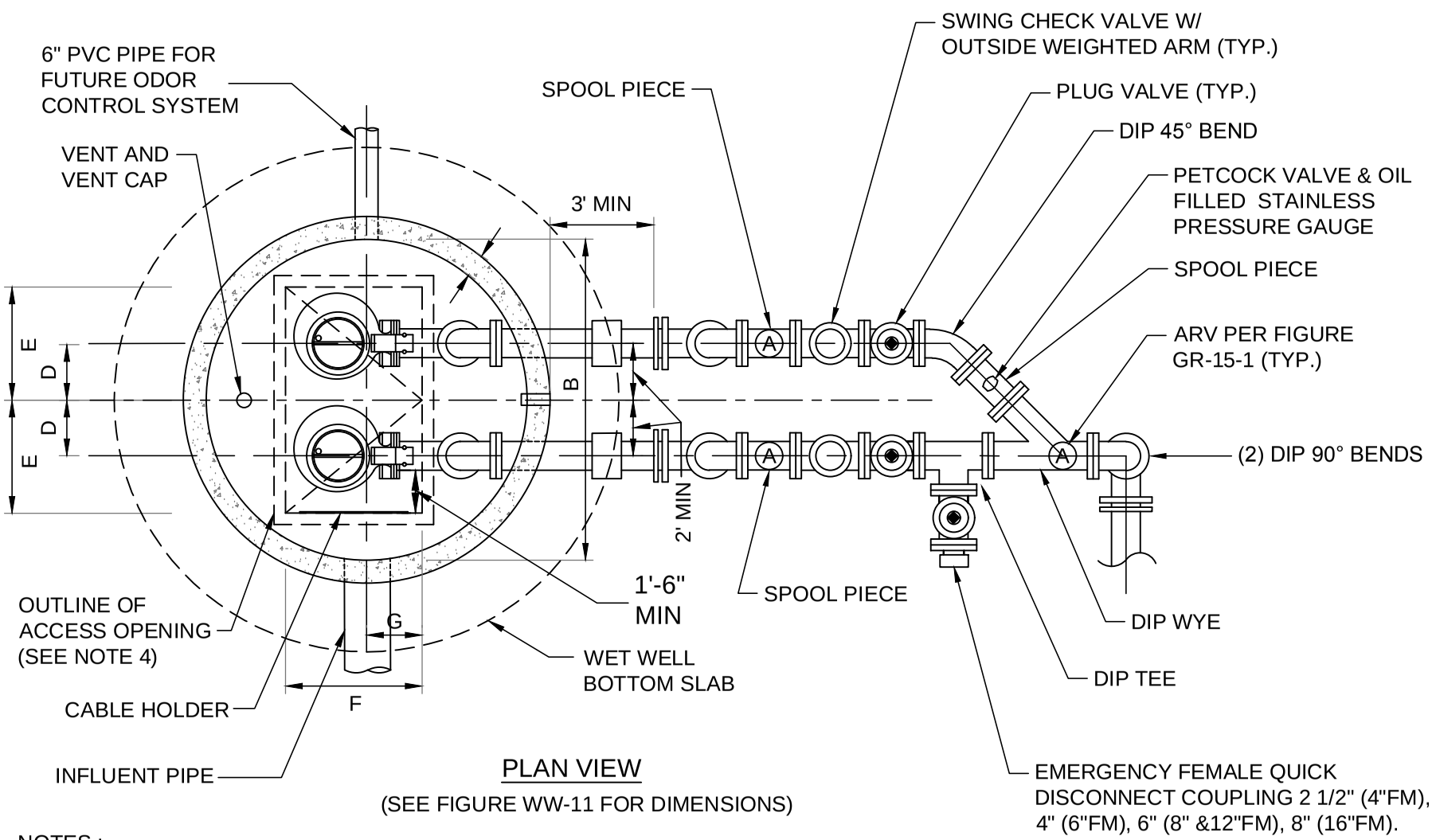

PLAN VIEW

(SEE FIGURE WW-11 FOR DIMENSIONS)

NOTES :

1. WET WELL OPENINGS SHALL BE PROVIDED WITH FALL PREVENTION DEVICES AS SPECIFIED IN THE " APPROVED MATERIALS CHECK LIST".
2. BACKFILL UNDER AND WITHIN 10' OF WET WELL CENTER AND UNDER AND WITHIN 5' OF VAULT SHALL BE PLACED IN 12" LIFTS AND COMPACTED TO 95% MAX DENSITY PER AASHTO T-180, DENSITY TEST RESULTS SHALL BE PROVIDED TO INSPECTOR PRIOR TO PLACEMENT OF SLAB.
3. VALVE BOX SHALL BE ENLARGED IF FLOW METER REQUIRED.
4. HATCH DOOR HINGES FOR WET WELL ACCESS ARE TO BE LOCATED ON OPPOSITE SIDE FROM GUIDE RAILS.

DUPLEX LIFT STATION
PLAN VIEW

POLK COUNTY UTILITIES, FLORIDA

FIGURE
WW-12-1

OCTOBER, 2015

POLK COUNTY UTILITIES, FLORIDA

DUPLEX LIFT STATION
SECTION VIEW

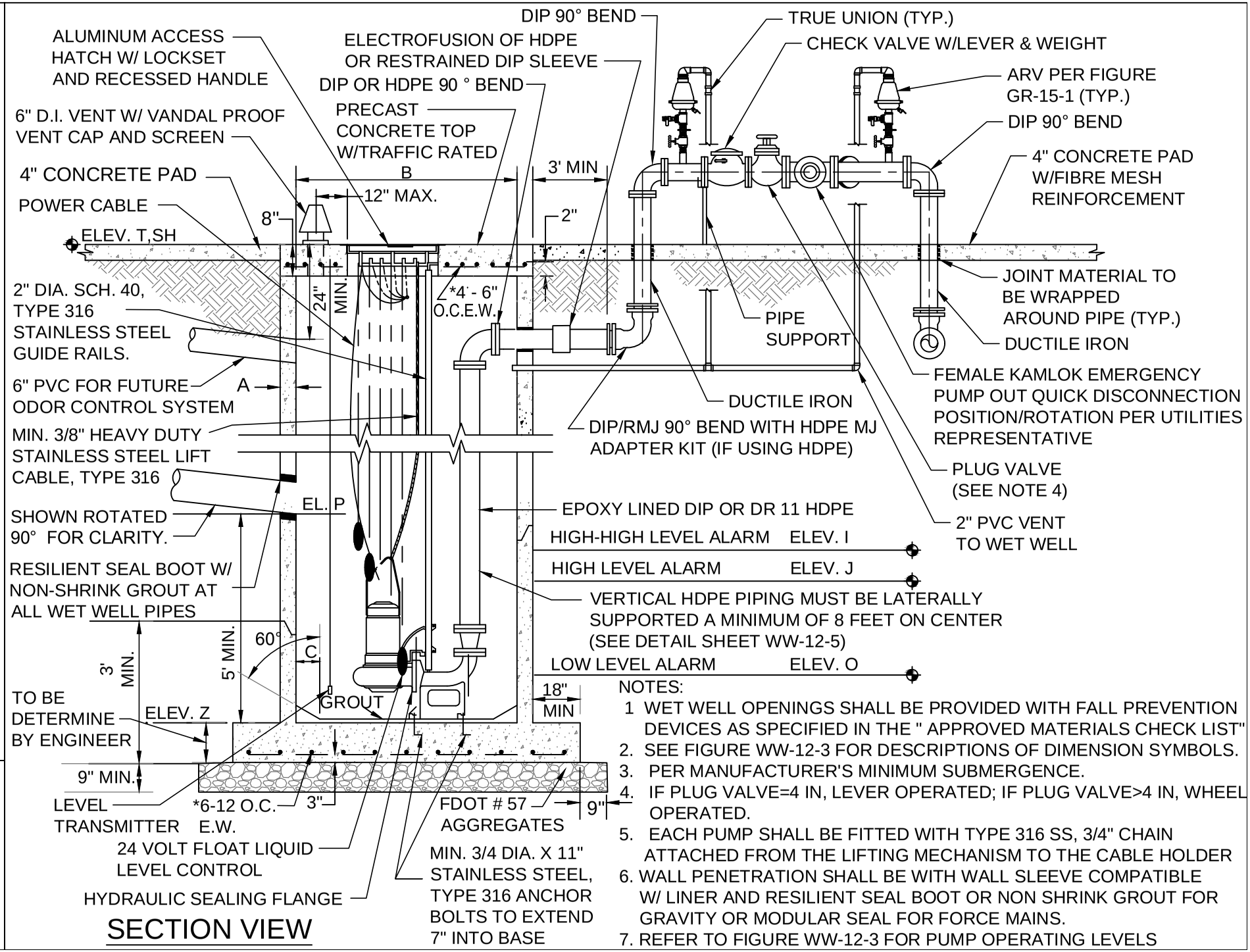

SECTION VIEW

NOTES:

1. WET WELL OPENINGS SHALL BE PROVIDED WITH FALL PREVENTION DEVICES AS SPECIFIED IN THE " APPROVED MATERIALS CHECK LIST"
2. SEE FIGURE WW-12-3 FOR DESCRIPTIONS OF DIMENSION SYMBOLS.
3. PER MANUFACTURER'S MINIMUM SUBMERGENCE.
4. IF PLUG VALVE=4 IN, LEVER OPERATED; IF PLUG VALVE>4 IN, WHEEL OPERATED.
5. EACH PUMP SHALL BE FITTED WITH TYPE 316 SS, 3/4" CHAIN ATTACHED FROM THE LIFTING MECHANISM TO THE CABLE HOLDER
6. WALL PENETRATION SHALL BE WITH WALL SLEEVE COMPATIBLE W/ LINER AND RESILIENT SEAL BOOT OR NON SHRINK GROUT FOR GRAVITY OR MODULAR SEAL FOR FORCE MAINS.
7. REFER TO FIGURE WW-12-3 FOR PUMP OPERATING LEVELS

FIGURE
WW-12-2

OCTOBER, 2015

DESCRIPTION	SYMBOL	DIMENSION	ELEVATION
THICKNESS OF WALL (8" MIN.)	A		—
DIAMETER OF WET WELL (6' MIN.)	B		—
WIDTH OF BOTTOM FILLET	C	SEE NOTE 1	—
C/L TO C/L OF PUMPS	D	SEE NOTE 1	—
LENGTH OF PUMP ACCESS OPENING	E	SEE NOTE 1	—
WIDTH OF PUMP ACCESS OPENING	F	SEE NOTE 1	—
BASE ELBOW TO EDGE OF PIT	G	SEE NOTE 1	—
TOP OF WET WELL	T	—	
FINISHED GRADE	U	—	
INVERT OF GRAVITY PIPE	P	—	
FLOOR OF WET WELL	Z	—	
SEASONAL HIGH WATER ELEVATION (SEE NOTE 3)	SH	—	

NOTE:

1. PER PUMP MANUFACTURER'S REQUIREMENTS

2. TOP OF PUMP STATION SHALL BE NO LOWER THAN THE 25 YEAR FLOOD 24 HOUR ELEVATION. THE BOTTOM OF STATION CONTROL AND ELECTRICAL BOXES SHALL BE NO LOWER THAN THE 100 YEAR 24-HOUR FLOOD ELEVATION.

3. SEASONAL HIGH GROUND WATER ELEVATION 'SH' SHALL BE CONSIDERED THE SAME AS THE TOP OF WET WELL ELEVATION.

DESCRIPTION	SYMBOL	TRANSMITTER ELEVATION	FLOAT ELEVATION
VALVE HIGH-HIGH LEVEL ALARM	I		
HIGH LEVEL ALARM	J		
LAG PUMP ON	L		----
LEAD PUMP ON	M		----
BOTH PUMPS OFF	N		----
LOW LEVEL ALARM	O		

DUPLEX LIFT STATION DIMENSIONS AND ELEVATIONS TABLE	FIGURE WW-12-3
POLK COUNTY UTILITIES, FLORIDA	OCTOBER, 2015

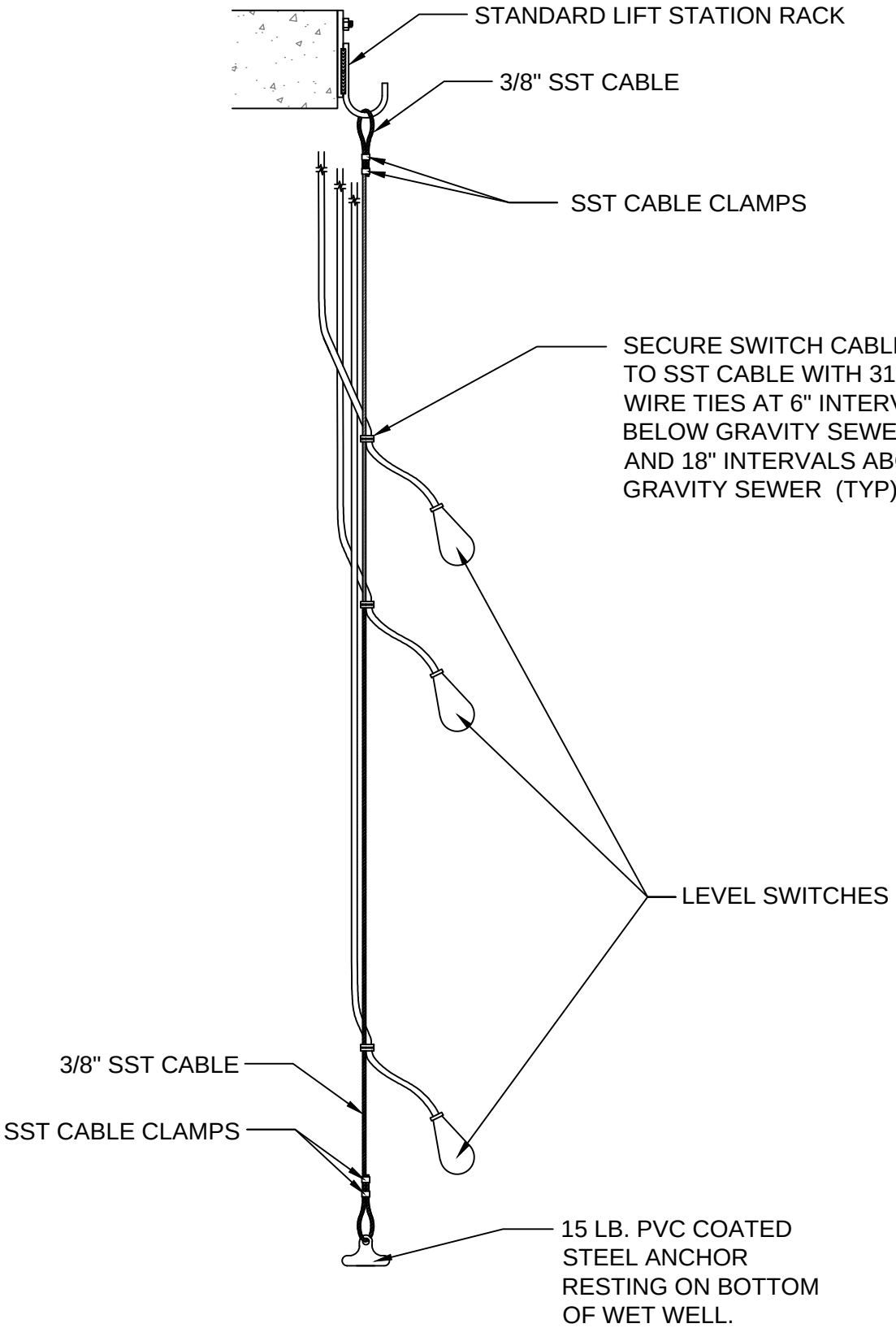

NOTES:

1. HANG FROM STANDARD LIFT STATION RACK

TYPICAL FLOAT TYPE LEVEL SWITCH INSTALLATION	FIGURE WW-12-4
POLK COUNTY UTILITIES, FLORIDA	SEPTEMBER, 2014

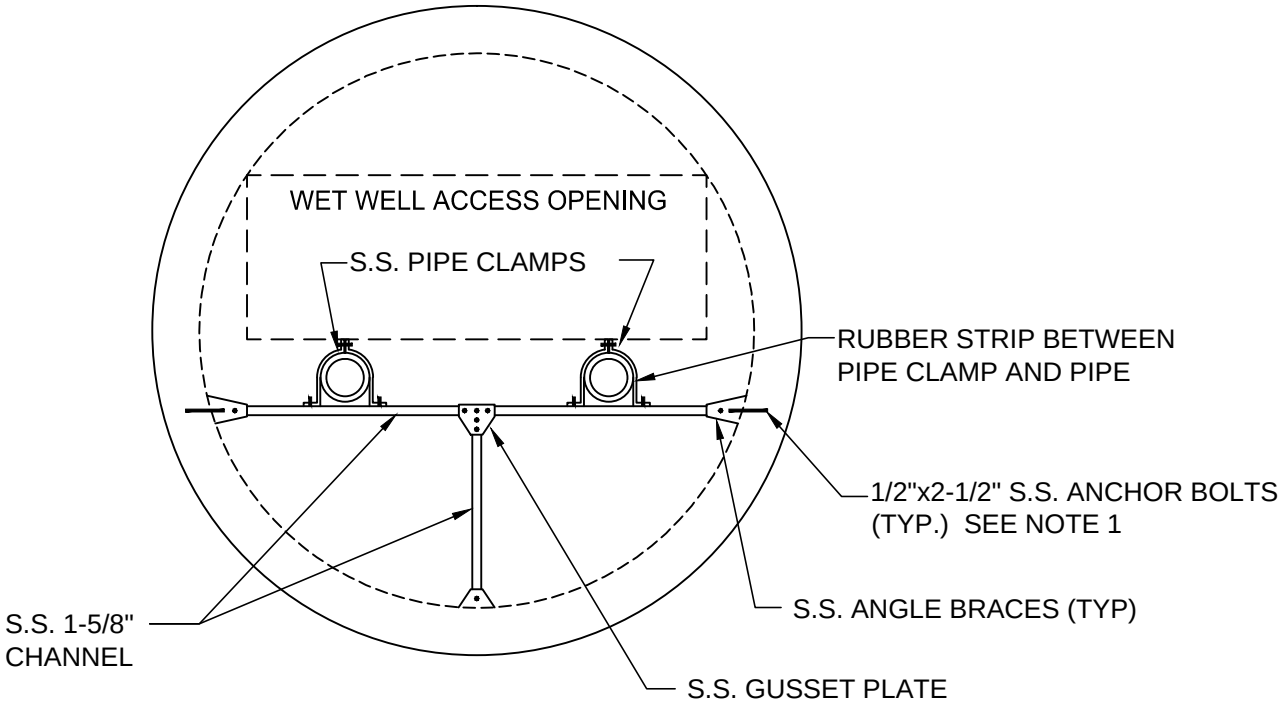

NOTE:

1. BOND ANCHOR BOLTS USING HIGH STRENGTH ANCHORING EPOXY FOR CONCRETE.

TYPICAL LIFT STATION HDPE PIPE BRACING	FIGURE WW-12-5
POLK COUNTY UTILITIES, FLORIDA	OCTOBER, 2015

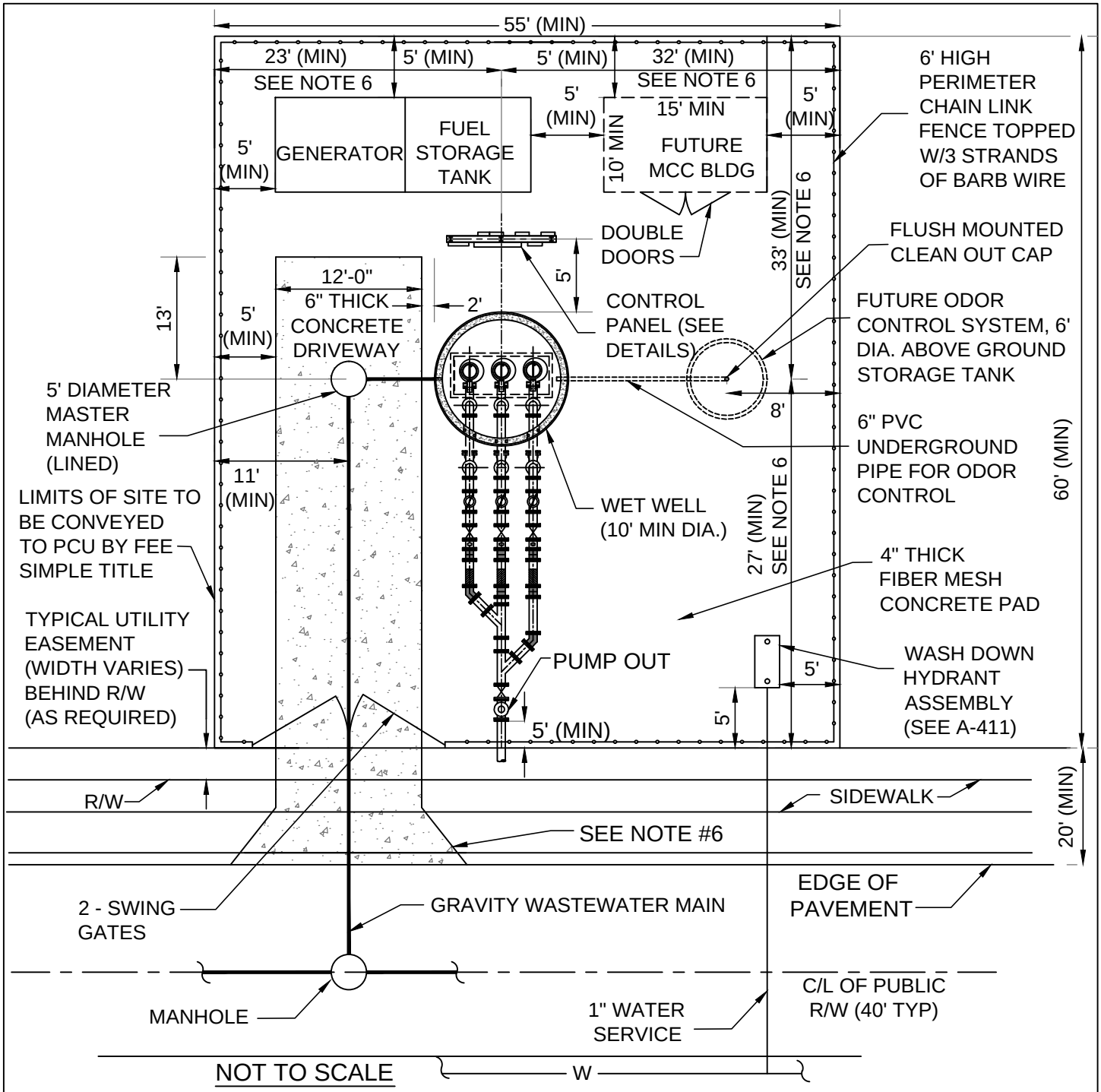

NOTES:

1. WET WELL OPENINGS SHALL BE PROVIDED WITH FALL PREVENTION DEVICES AS SPECIFIED IN THE " APPROVED MATERIALS CHECK LIST".
2. FENCING MAY BE REPLACED WITH OPTIONAL CONCRETE MASONRY WALL (SEE FIGURE WW-17-1 + 2)
3. SLOPE OF STATION PAD AND DRIVEWAY SHALL BE 1/8" PER 1' DOWN SLOPE (1.0%), NO LESS OR MORE, FROM CENTER OF WET WELL TO PERIMETER OF STATION.
4. ENGINEER SHALL PROVIDE A SCALED (1" = 20' MIN) SITE SPECIFIC DETAIL.
5. MINIMUM DISTANCE BETWEEN FENCE AND ALL INSTALLED EQUIPMENT SHALL BE 5.0'.
6. THIS DIMENSION SHALL INCREASE 1.0' FOR EACH FOOT OF ADDITIONAL WET WELL DEPTH OVER 15'.
7. USE OF 20' RADIUS OR 5' FLARE OF DRIVEWAY AT ROADWAY SHALL BE DETERMINED BY THE SURROUNDING DRIVEWAY GEOMETRY.
8. MINIMUM DRIVEWAY LENGTH FROM LIFT STATION'S GATES TO THE ADJACENT ROADWAY'S EDGE OF PAVEMENT OR BACK OF CURB SHALL BE 20' ALONG LOW TRAFFIC VOLUME TWO LANE RESIDENTIAL ROADWAYS. DRIVEWAY LENGTH ALONG ALL OTHER ROADWAYS SHALL NOT BE LESS THAN 45'.

TRIPLEX LIFT STATION (TYPICAL) SITE PLAN	**FIGURE WW-13**
POLK COUNTY UTILITIES, FLORIDA	**DECEMBER, 2010**

POLK COUNTY UTILITIES, FLORIDA

TRIPLEX LIFT STATION
PLAN VIEW

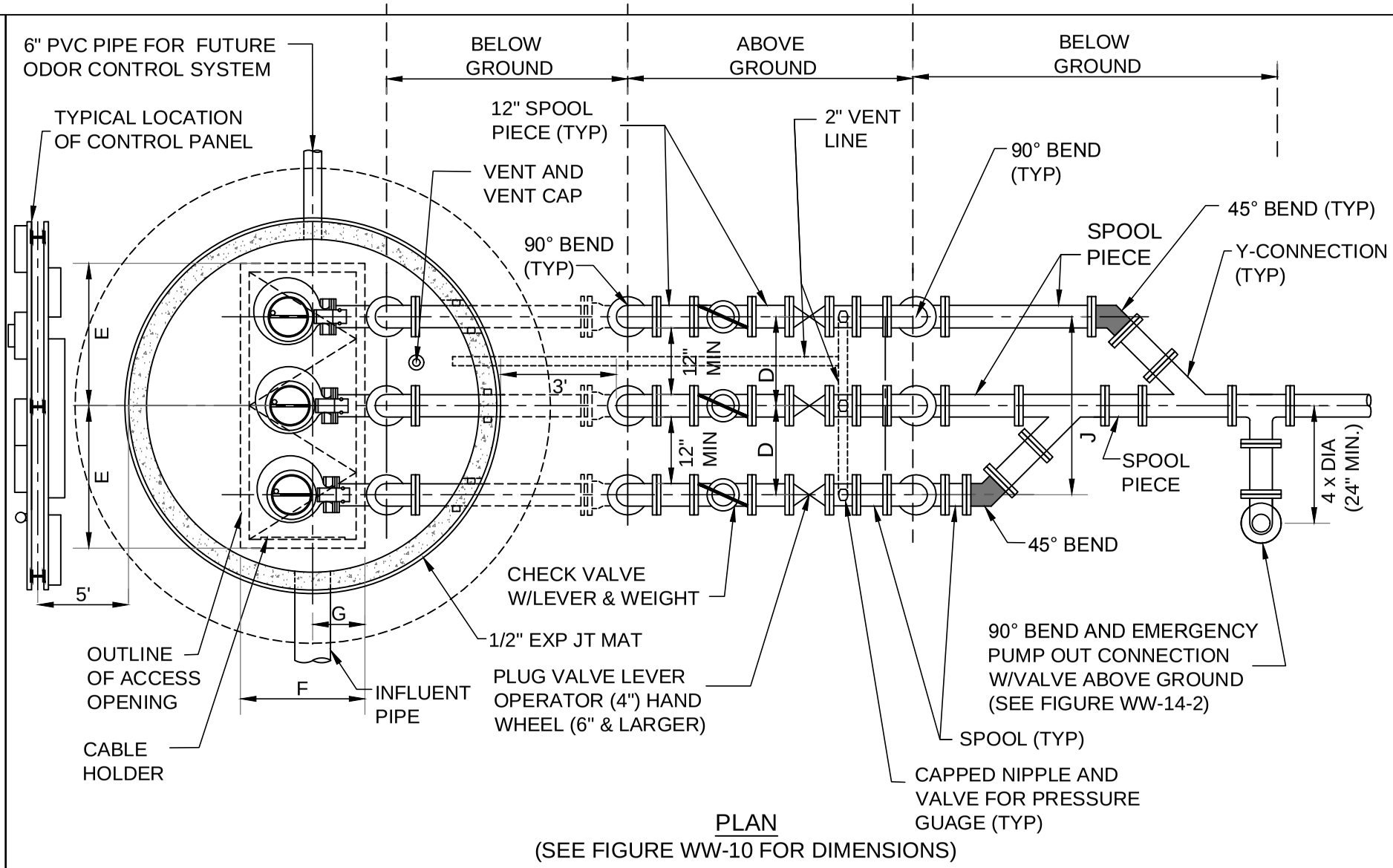

PLAN

(SEE FIGURE WW-10 FOR DIMENSIONS)

NOTES :

1. WET WELL OPENINGS SHALL BE PROVIDED WITH FALL PREVENTION DEVICES AS SPECIFIED IN THE " APPROVED MATERIALS CHECK LIST".
2. PROVIDE SUFFICIENT CLEARANCE BETWEEN PARALLEL PIPES TO REMOVE CHECK VALVE ARMS WITHOUT REMOVING VALVE.
3. BACKFILL UNDER AND WITHIN 10' OF WET WELL CENTER SHALL BE PLACED IN 12" LIFTS AND COMPACTED TO 95% MAX DENSITY PER AASHTO T-180, DENSITY TEST RESULTS SHALL BE PROVIDED TO INSPECTOR PRIOR TO PLACEMENT OF SLAB.
3. HATCH DOOR HINGES FOR WET WELL ACCESS ARE TO BE LOCATED ON OPPOSITE SIDE FROM GUIDERAILS.

FIGURE WW-14-1

DECEMBER, 2010

TRIPLEX LIFT STATION (ABOVE GROUND PIPING)
SECTION VIEW

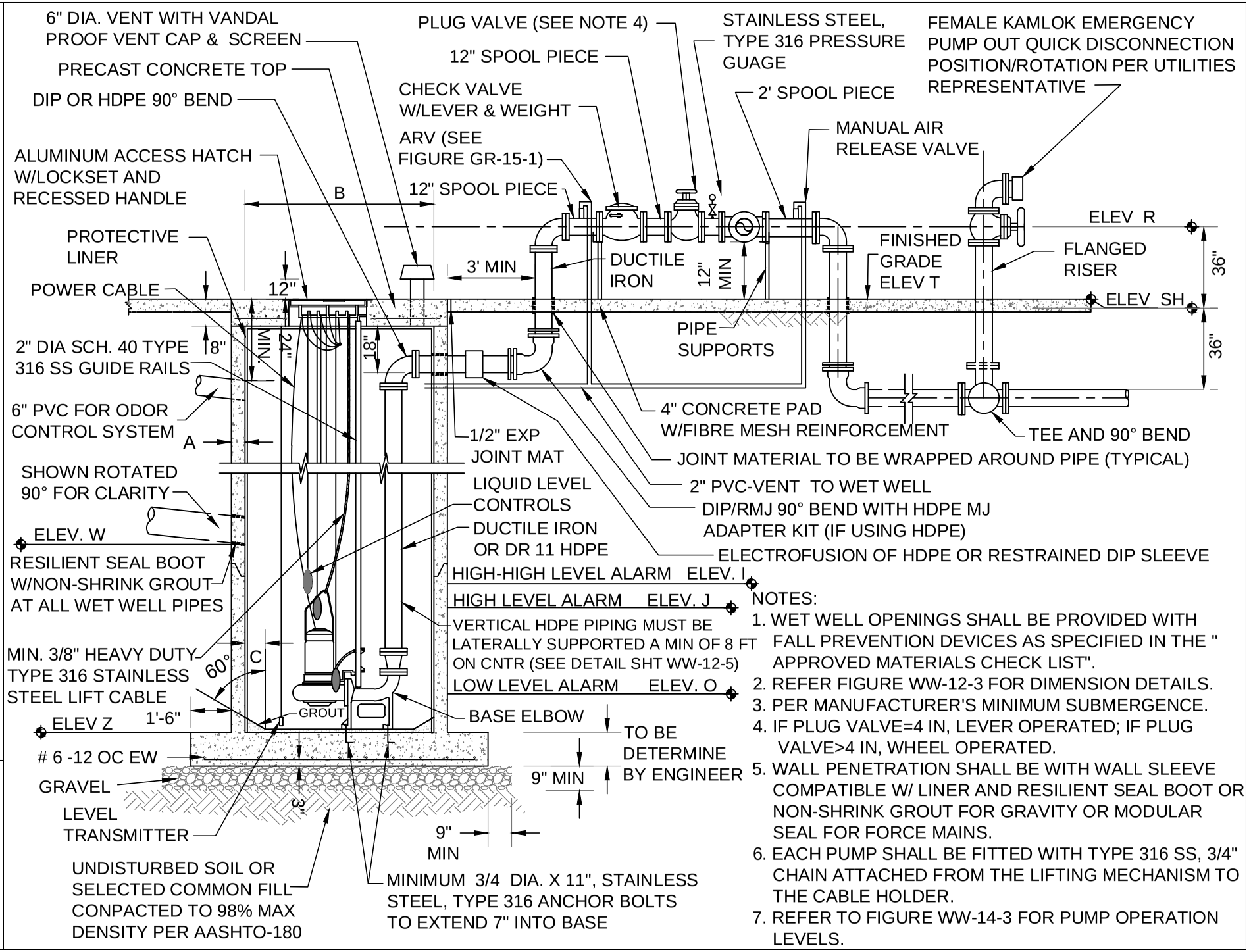

NOTES:

1. WET WELL OPENINGS SHALL BE PROVIDED WITH FALL PREVENTION DEVICES AS SPECIFIED IN THE " APPROVED MATERIALS CHECK LIST".
2. REFER FIGURE WW-12-3 FOR DIMENSION DETAILS.
3. PER MANUFACTURER'S MINIMUM SUBMERGENCE.
4. IF PLUG VALVE=4 IN, LEVER OPERATED; IF PLUG VALVE>4 IN, WHEEL OPERATED.
5. WALL PENETRATION SHALL BE WITH WALL SLEEVE COMPATIBLE W/ LINER AND RESILIENT SEAL BOOT OR NON-SHRINK GROUT FOR GRAVITY OR MODULAR SEAL FOR FORCE MAINS.
6. EACH PUMP SHALL BE FITTED WITH TYPE 316 SS, 3/4" CHAIN ATTACHED FROM THE LIFTING MECHANISM TO THE CABLE HOLDER.
7. REFER TO FIGURE WW-14-3 FOR PUMP OPERATION LEVELS.

POLK COUNTY UTILITIES, FLORIDA

FIGURE WW-14-2

OCTOBER, 2015

DESCRIPTION	SYMBOLS	DIMENSIONS	ELEVATIONS
THICKNESS OF WALL 8" (MIN)	A		----
DIAMETER OF WET WELL 10' (MIN)	B		----
WIDTH OF BOTTOM FILLET	C	SEE NOTE 1	----
C/L TO C/L OF PUMPS	D	SEE NOTE 1	----
LENGTH OF PUMP ACCESS	E	SEE NOTE 1	----
WIDTH OF PUMP ACCESS	F	SEE NOTE 1	----
BASE ELBOW TO EDGE OF PIT	G	SEE NOTE 1	----
CENTERLINE OF HEADER PIPE	R	----	
TOP OF WELL	S	----	
FINISH GRADE	T	----	
INVERT OF GRAVITY PIPE	P	----	
FLOOR OF WET WELL	Z	----	
SEASONAL HIGH WATER ELEVATION (SEE NOTE 3)	SH	----	

NOTE :

1. THESE DIMENSIONS SHALL BE SET AS PER PUMP MANUFACTURERS REQUIREMENTS.
2. TOP OF PUMP STATION SHALL BE NO LOWER THAN THE 25 YEAR 24 HOUR FLOOD ELEVATION. THE BOTTOM OF STATION CONTROL AND ELECTRICAL BOXES SHALL BE NO LOWER THAN THE 100 YEAR 24 HOUR FLOOD ELEVATION.
3. SEASONAL HIGH GROUND WATER ELEVATION (SH) SHALL BE CONSIDERED THE SAME AS THE TOP OF WET WELL ELEVATION.

DESCRIPTION	SYMBOL	TRANSMITTER ELEVATION	FLOAT ELEVATION
VALVE HIGH-HIGH LEVEL ALARM	I		
HIGH LEVEL ALARM	J		
LAG-LAG PUMP ALARM	L-1		----
LAG PUMP ON	L-2		----
LEAD PUMP ON	M		----
BOTH PUMPS OFF	N		----
LOW LEVEL ALARM	O		

TRIPLEX LIFT STATION
DIMENSIONS AND ELEVATIONS TABLE

FIGURE
WW-14-3

POLK COUNTY UTILITIES, FLORIDA

OCTOBER, 2015

GAUGE/DIAPHRAGM ASSEMBLY

NTS

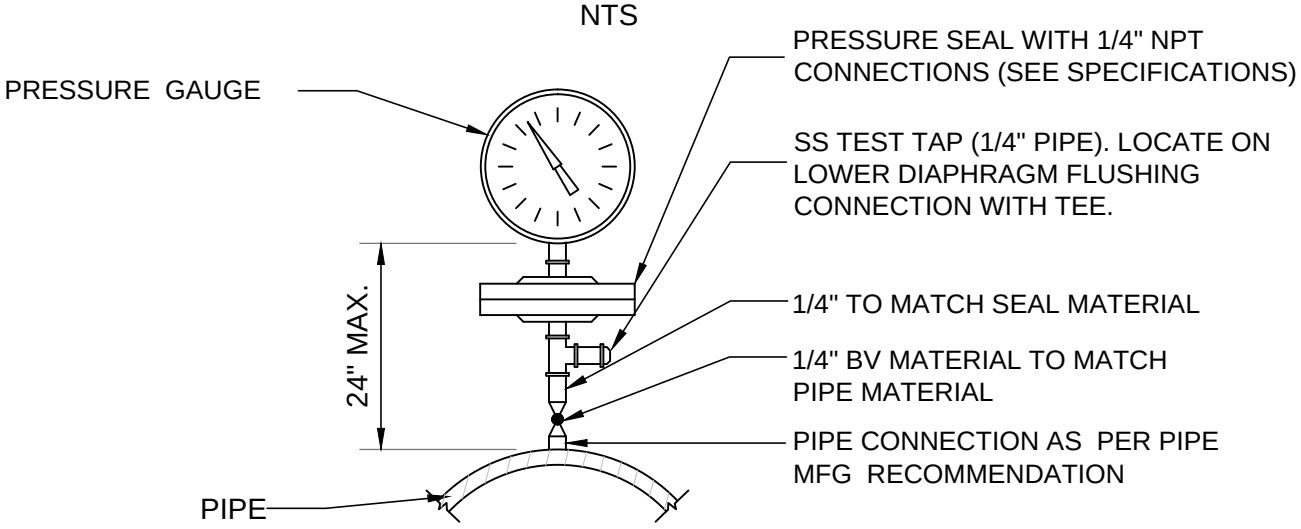

FLANGE PIPE SUPPORT DETAIL

NTS

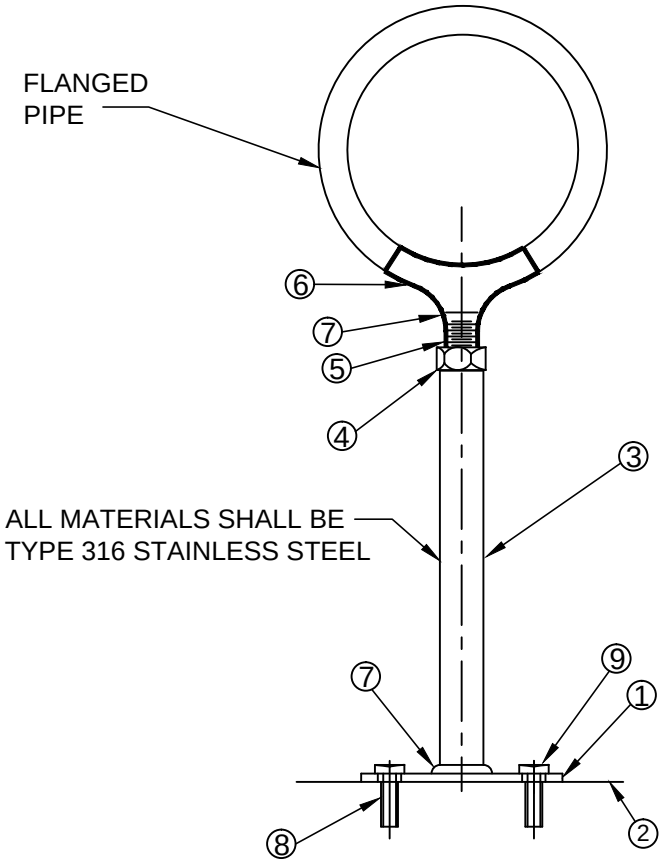

SECTION VIEW

NTS

LEGEND

1. BASE
2. CONCRETE PAD
3. SUPPORT COLUMN
4. HEIGHT ADJUSTMENT NUT
5. SUPPORT SHAFT - THREADED
6. MANUFACTURED PIPE SUPPORT CRADLE
7. WELD
8. ANCHOR (4-TYP)
9. LAG BOLT (4-TYP)

PIPE SUPPORT AND GAUGE / DIAPHRAGM ASSEMBLY (TYPICAL)	FIGURE WW-15
POLK COUNTY UTILITIES, FLORIDA	DECEMBER, 2010

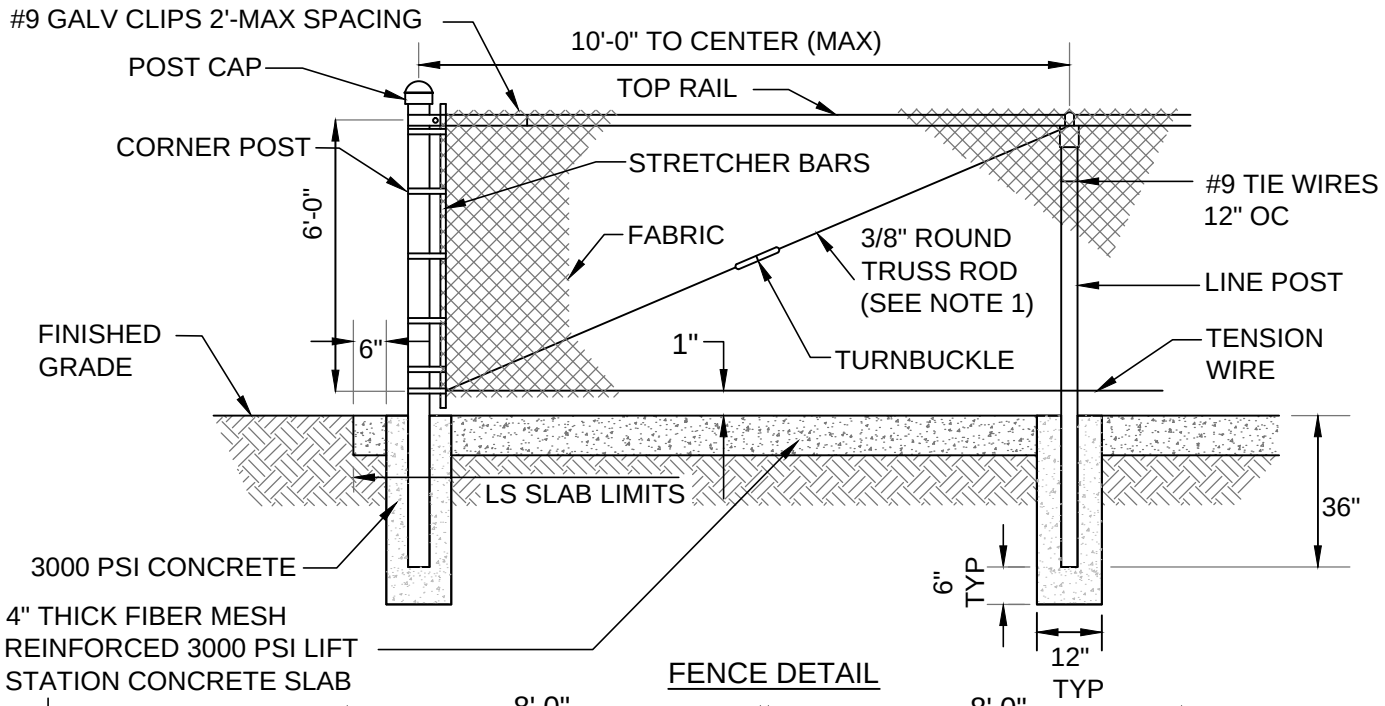

FENCE DETAIL

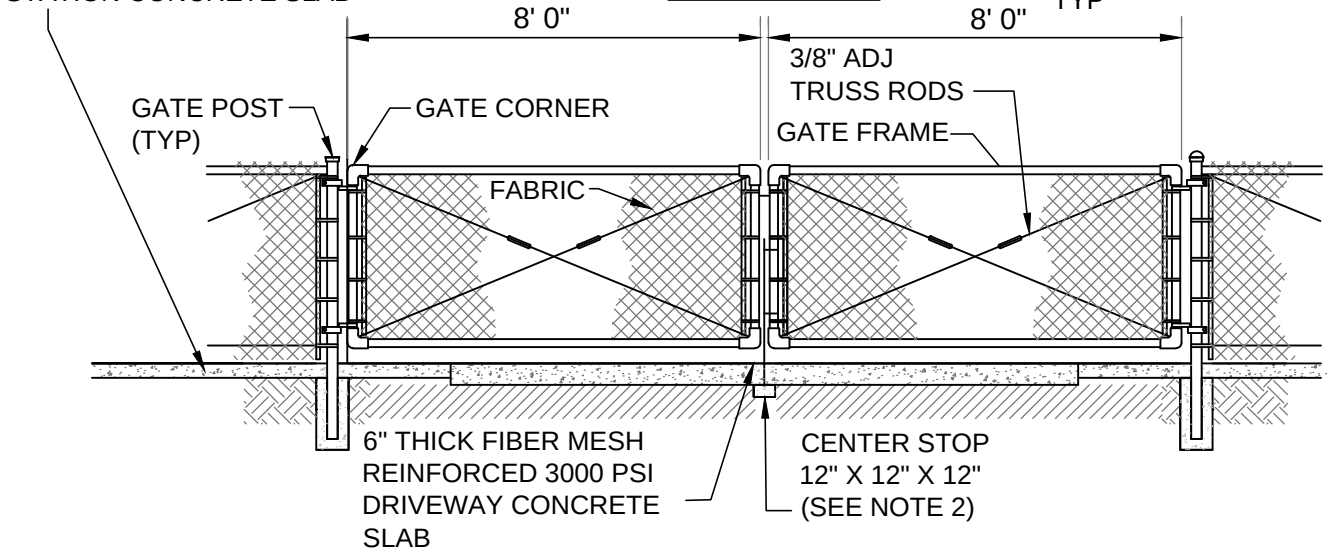

4" THICK FIBER MESH REINFORCED
3000 PSI LIFT STATION CONCRETE SLAB

DOUBLE SWING GATE DETAIL

NOTES:

1. TRUSS RODS ARE REQUIRED FOR EACH GATE SECTION AND THE FIRST SPAN ON EACH SIDE OF A GATE AND EACH SIDE OF A CORNER POST ONLY.
2. GATE SHALL BE CAPABLE OF BEING LOCKED SECURELY WITH MINIMUM SPACE BETWEEN GATES.
3. FENCING SHALL BE BLACK, FACTORY APPLIED VINYL CLAD.
4. THREE STRANDS OF BARBED WIRE SHALL BE INSTALLED ON TOP ONLY IF APPROVED BY PCU. 2' FENCE AND GATE POST CAP EXTENSION SHALL BE INCORPORATED INTO FENCE AND/OR GATE DESIGN ACCORDINGLY. BARBED WIRE SHALL BE INSTALLED VERTICALLY AT GATE.
5. ELECTRO-MECHANICAL LOCKING DEVICE MAY BE USED IF REQUIRED BY PCU AND IN ACCORDANCE WITH APPROVED MATERIALS CHECK LIST.

	REV DECEMBER, 2012
CHAIN LINK FENCE (TYPICAL)	**FIGURE WW-16**
POLK COUNTY UTILITIES, FLORIDA	**DECEMBER, 2010**

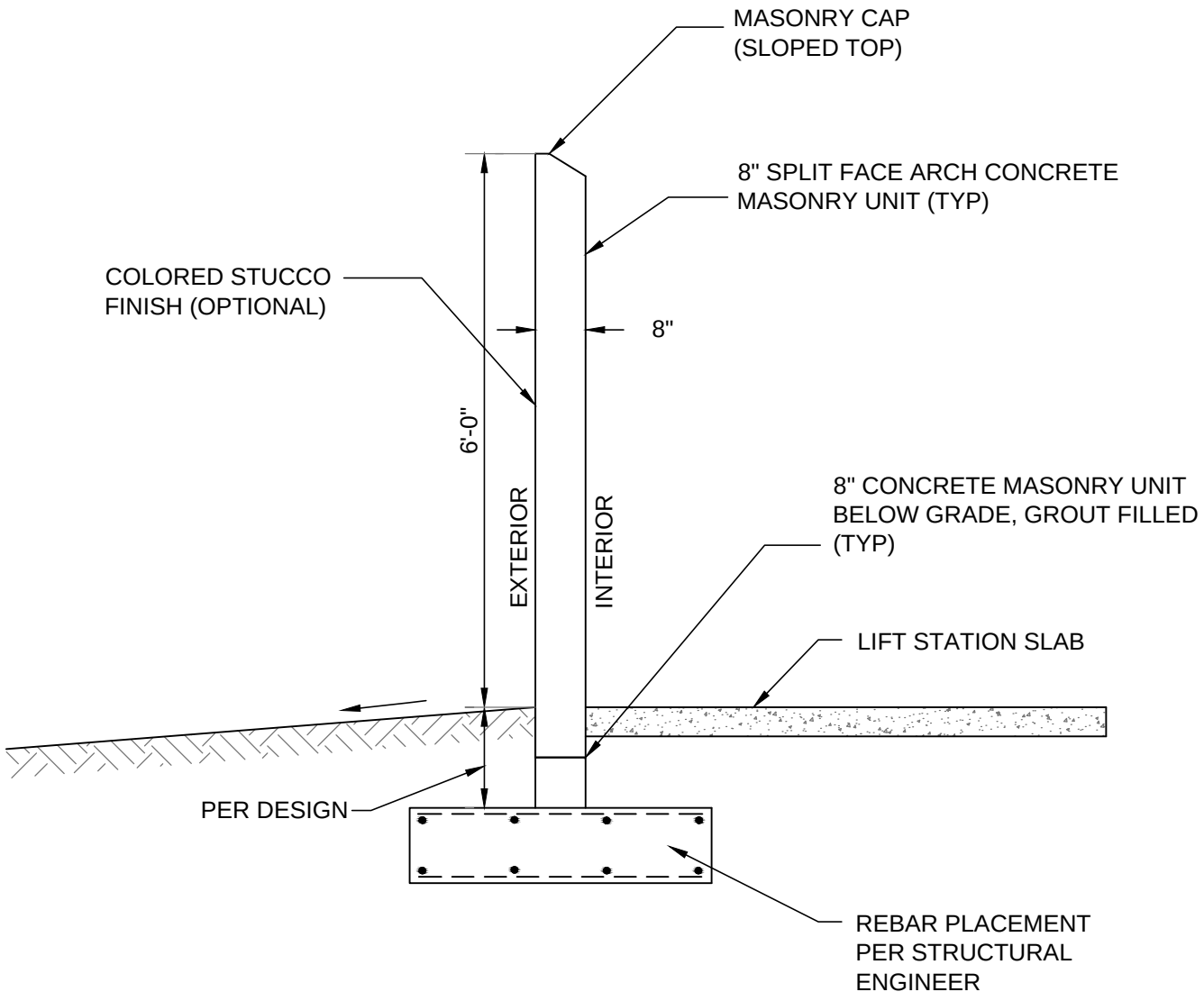

SECTION VIEW

NOTES:

1. ENGINEER TO PROVIDE SIGNED AND SEALED STRUCTURAL WALL DESIGN. WALL PERMIT REQUIRED BY THE POLK COUNTY BUILDING DEPARTMENT.

REV : OCTOBER, 2013

LIFT STATION WALL (TYPICAL) SECTION VIEW	FIGURE WW-17-1
POLK COUNTY UTILITIES, FLORIDA	DECEMBER, 2010

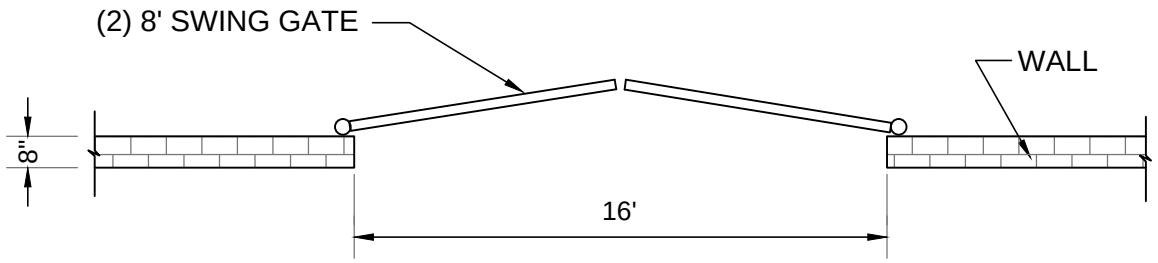

PLAN VIEW

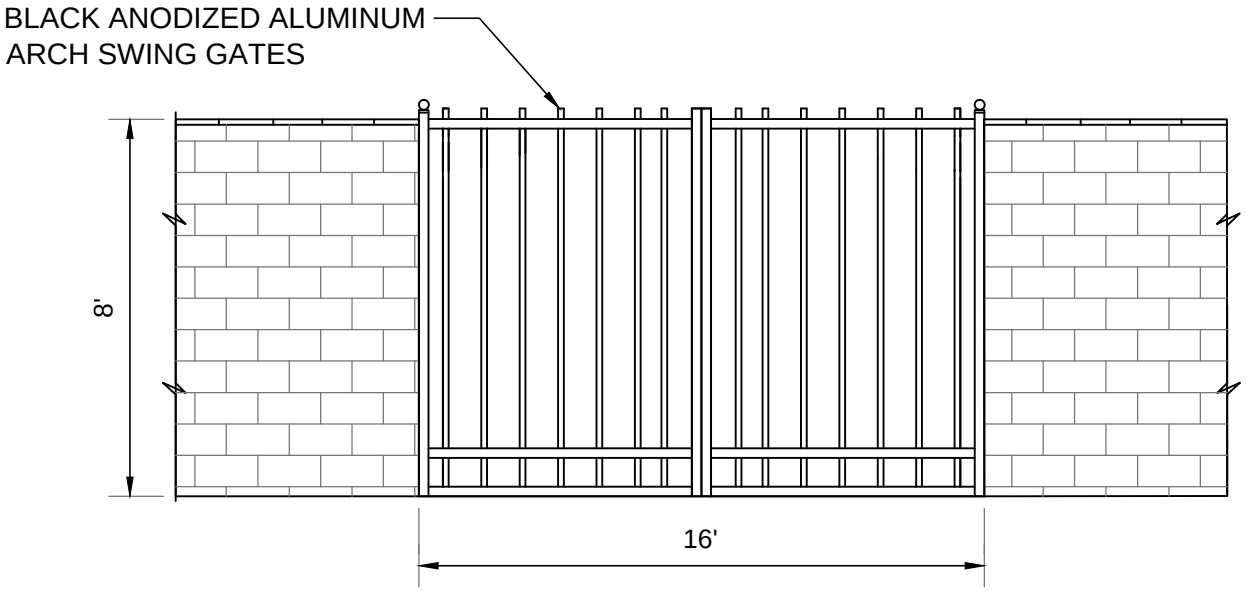

GATE ELEVATION

NOTE:

1. A ROLLER TYPE GATE MAY BE SUBSTITUTED TOR SWING GATES AS APPROVED OR REQUESTED BY PCU.

CANTILEVER SWING GATE (TYPICAL)	FIGURE WW-17-2
POLK COUNTY UTILITIES, FLORIDA	DECEMBER, 2010

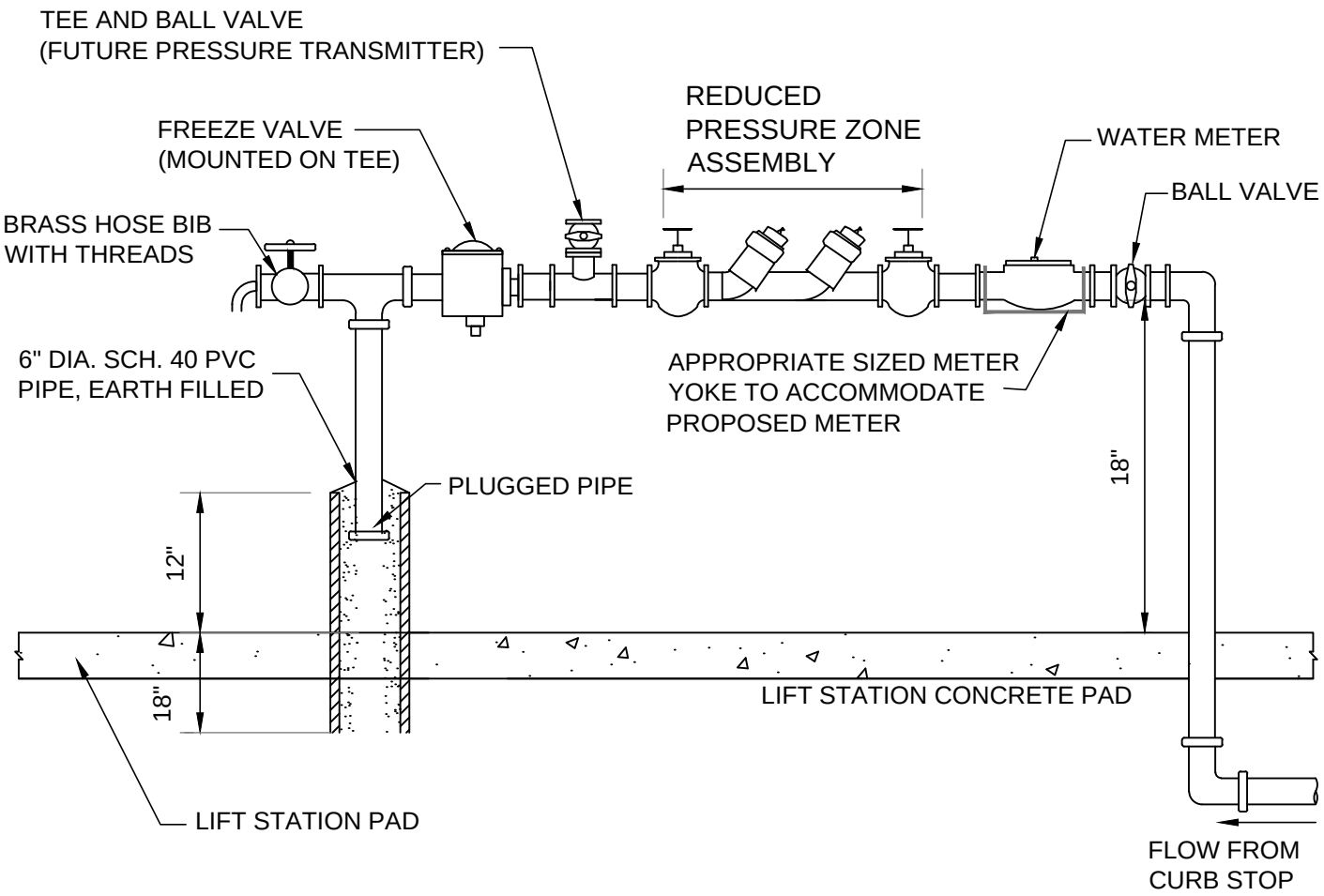

NOTES:

1. ALL ABOVE GROUND PIPING AND APPURTENANCES SHALL BE 3/4" SCH 40 BRASS PIPE.

2. AN APPROVED REDUCED PRESSURE ZONE ASSEMBLY SHALL BE SELECTED IN ACCORDANCE WITH PCU'S " APPROVED CROSS CONNECTION CONTROL ASSEMBLY LIST"

3. UNDERGROUND PIPING SHALL CONFORM TO POTABLE WATER SERVICE LATERAL SPECIFICATIONS FOR PE PIPE.

4. ALL ABOVE GRADE PIPING SHALL RECEIVE TWO COATS OF BLUE EPOXY PAINT.

5. METER SHALL BE FURNISHED AND INSTALLED BY PCU.

6. THE CONTRACTOR SHALL FURNISH AND INSTALL ENTIRE ASSEMBLY, INCLUDING METER YOKE.

REV. : SEPTEMBER, 2014

LIFT STATION WASH DOWN ASSEMBLY (TYPICAL)	**FIGURE WW-18**
POLK COUNTY UTILITIES, FLORIDA	**DECEMBER, 2010**

THIS PAGE IS INTENTIONALLY BLANK

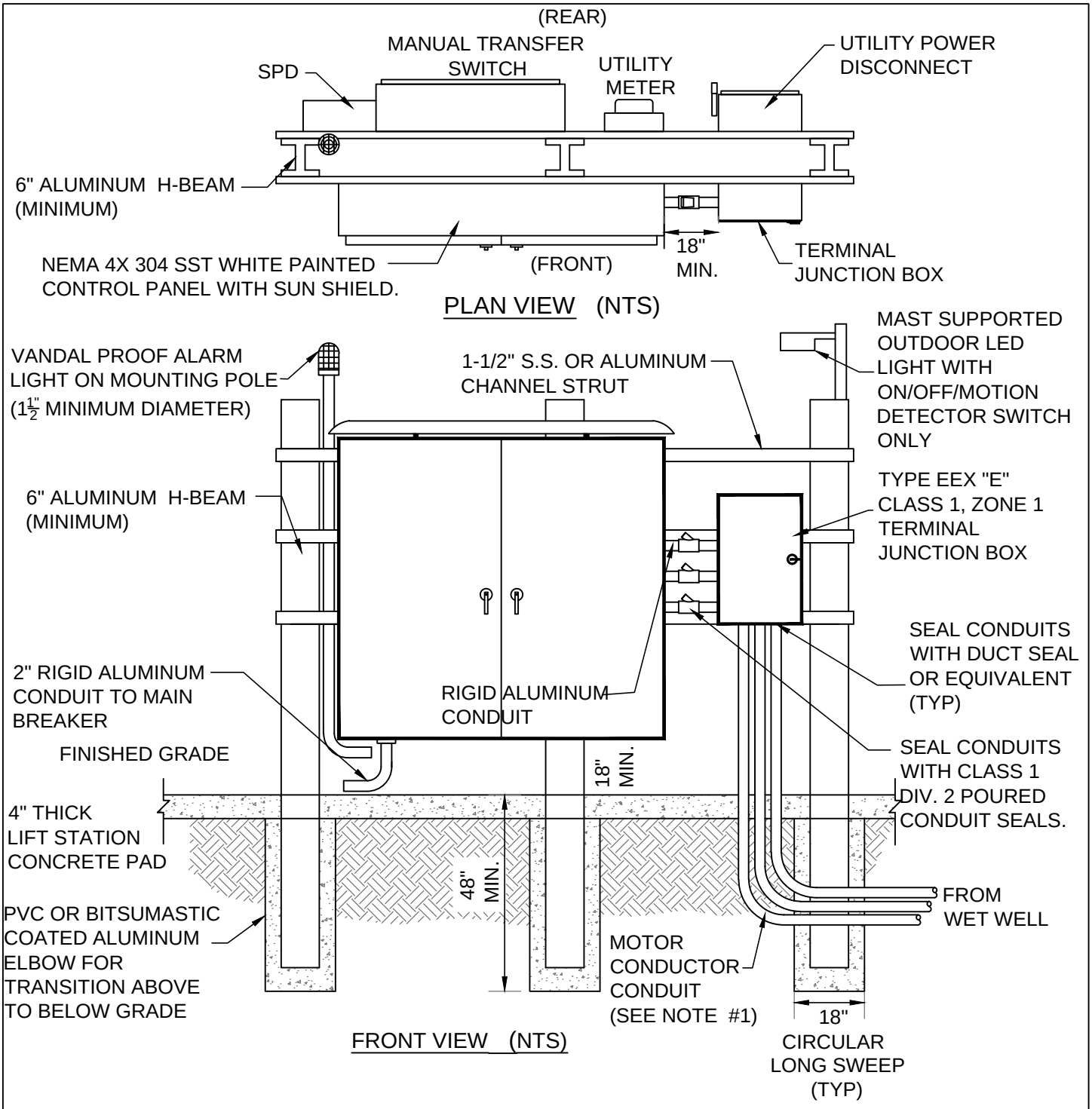

PANEL INSTALLATION NOTES:

1. PUMP MOTOR CONDUIT SHALL BE SIZE TO ACCOMMODATE 40% CONDUIT FILL. MINIMUM CONDUIT SIZE TO BE 2" SCH 80 PVC.
2. POWER SUPPLY SHALL BE 3 PHASE AND UNDERGROUND FROM THE LIFT STATION METER BASE TO THE 3-PHASE SOURCE.
3. THE STATION NAME, PCU I.D. NUMBER, AND ADDRESS SHALL BE AFFIXED TO THE FRONT OF THE PANEL CABINET AS SPECIFIED BY PCU.
4. ALL MOUNTING HARDWARE & BRACKETS SHALL BE 316 STAINLESS STEEL.
5. THE ENGINEER SHALL INCREASE THE SIZE OF THE VERTICAL SUPPORT MEMBERS DEPENDING ON WIND LOAD REQUIREMENTS.

REV. : SEPTEMBER, 2014

LIFT STATION CONTROL PANEL FRONT VIEW	**FIGURE WW-20-1**
POLK COUNTY UTILITIES, FLORIDA	**DECEMBER, 2010**

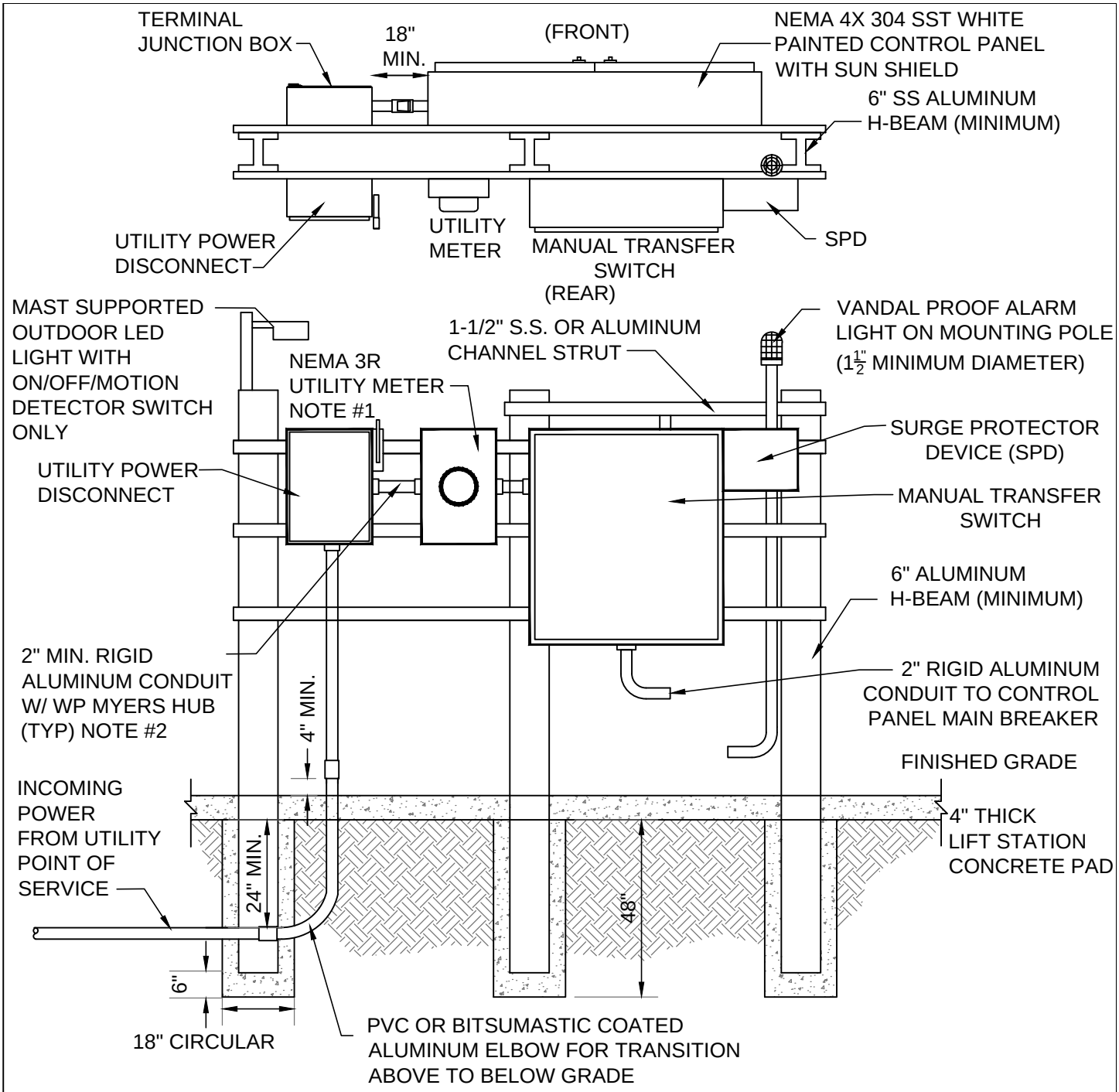

FRONT VIEW
(NTS)

PANEL INSTALLATION NOTES:

1. PROVIDE METER BASE AS REQUIRED BY THE ELECTRICAL UTILITY.
2. POWER SUPPLY SHALL BE 3 PHASE AND UNDERGROUND FROM THE LIFT STATION PANEL TO THE 3-PHASE SOURCE.
3. ALL MOUNTING HARDWARE & BRACKETS SHALL BE 316 STAINLESS STEEL.
4. THE ENGINEER SHALL INCREASE THE SIZE OF THE VERTICAL SUPPORT MEMBERS DEPENDING ON WIND LOAD REQUIREMENTS.
5. PROVIDE DISCONNECT BEFORE UTILITY METER WHERE REQUIRED BY THE LOCAL ELECTRIC UTILITY.

LIFT STATION CONTROL PANEL REAR VIEW	**FIGURE WW-20-2**
POLK COUNTY UTILITIES, FLORIDA	**OCTOBER, 2015**

THIS PAGE IS INTENTIONALLY BLANK

LEGEND

AH	_	ALARM HORN
AL	_	ALARM LIGHT
ASB	_	ALARM SILENCE BUTTON
ATS	_	ALTERNATOR SWITCH
CCB	_	CONTROL CIRCUIT BREAKER
DPDT	_	DOUBLE POLE DOUBLE THROW
DRB	_	DUPLEX RECEPTACLE BREAKER
ECB	_	EMERGENCY CIRCUIT BREAKER
ETM	_	ELAPSED TIME METER
F	_	FUSE
FB	_	FUSE BLOCK
FL	_	FLASHER
FR	_	FLOAT REGULATOR
GFDR	_	GROUND FAULT DUPLEX RECEPTACLE
GR	_	GENERATOR RECEPTACLE
HOA	_	HAND-OFF-AUTO SELECTOR SWITCH
MB	_	MOTOR BREAKER
MCB	_	MAIN CIRCUIT BREAKER
MS	_	MOTOR STARTER
OL	_	OVERLOAD
PL	_	PILOT LIGHT
PM	_	PHASE MONITOR
R	_	RELAY
RL	_	RUNNING LIGHT
SCB	_	SCADA CIRCUIT BREAKER
TB	_	TERMINAL BLOCK
TTS	_	THERMAL TERMINAL STRIP
TVSS	_	TRANSIENT VOLTAGE SURGE SUPPRESOR
XFMR	_	TRANSFORMER

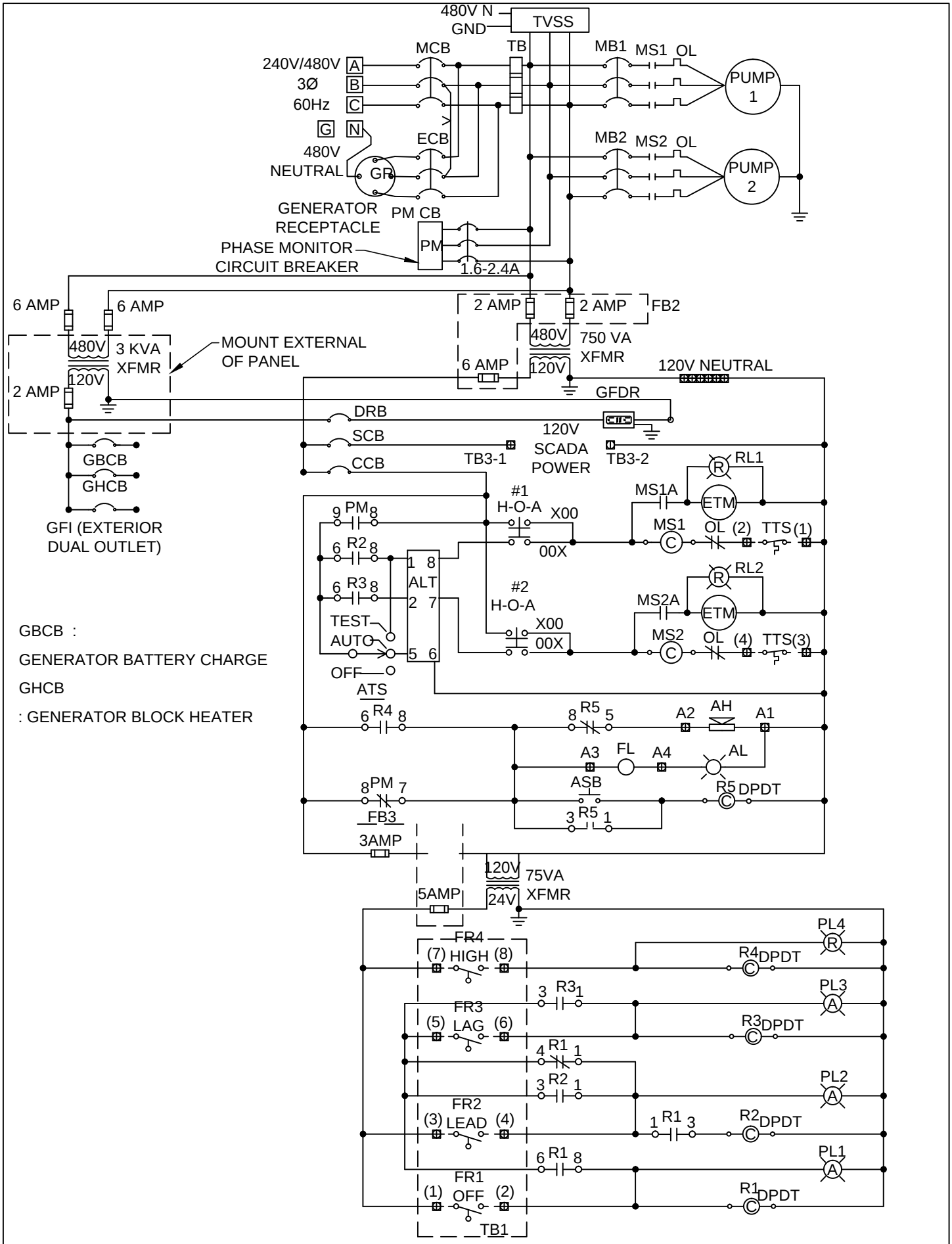

DUPLEX PUMP CONTROL SCHEMATIC (240V/480V)

FIGURE WW-23

POLK COUNTY UTILITIES, FLORIDA

DECEMBER, 2010

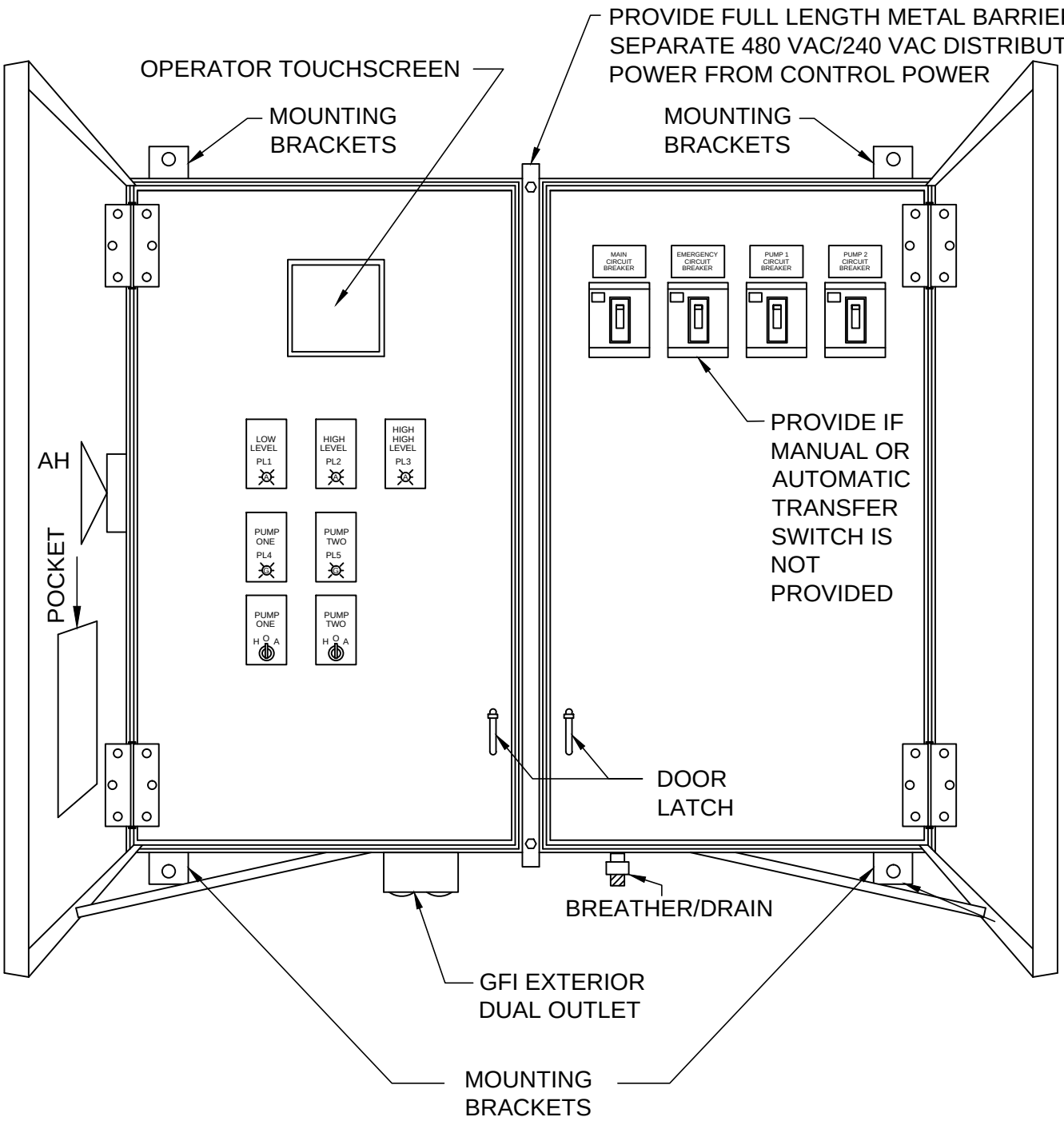

NOTES:

1. DEADFRONT LAYOUT NEMA TYPE 4X WHITE PAINTED 304 SS ENCLOSURE W/CONTINUOUS HINGE. ALL HARDWARE TYPE 316 SS TYPICAL, ACTUAL LAYOUT MAY VARY WITH HORSEPOWER.
2. SIZE LANEL AND MODIFY LAYOUT AS REQUIRED FOR PANEL TYPE AND NUMBER OF PUMPS.
3. ALL CONTROL WIRE TO BE #14 AWG MINIMUM.
4. CONTROL PANEL SHALL BE UL LISTED AND LABELED.

REV. : SEPTEMBER, 2014

DUPLEX CONTROL PANEL ENCLOSURE DEAD FRONT LAYOUT (TYPICAL)	**FIGURE WW-24**
POLK COUNTY UTILITIES, FLORIDA	**DECEMBER, 2010**

THIS PAGE IS INTENTIONALLY BLANK

REV. : SEPTEMBER, 2014

	FIGURE WW-25
POLK COUNTY UTILITIES, FLORIDA	**DECEMBER, 2010**

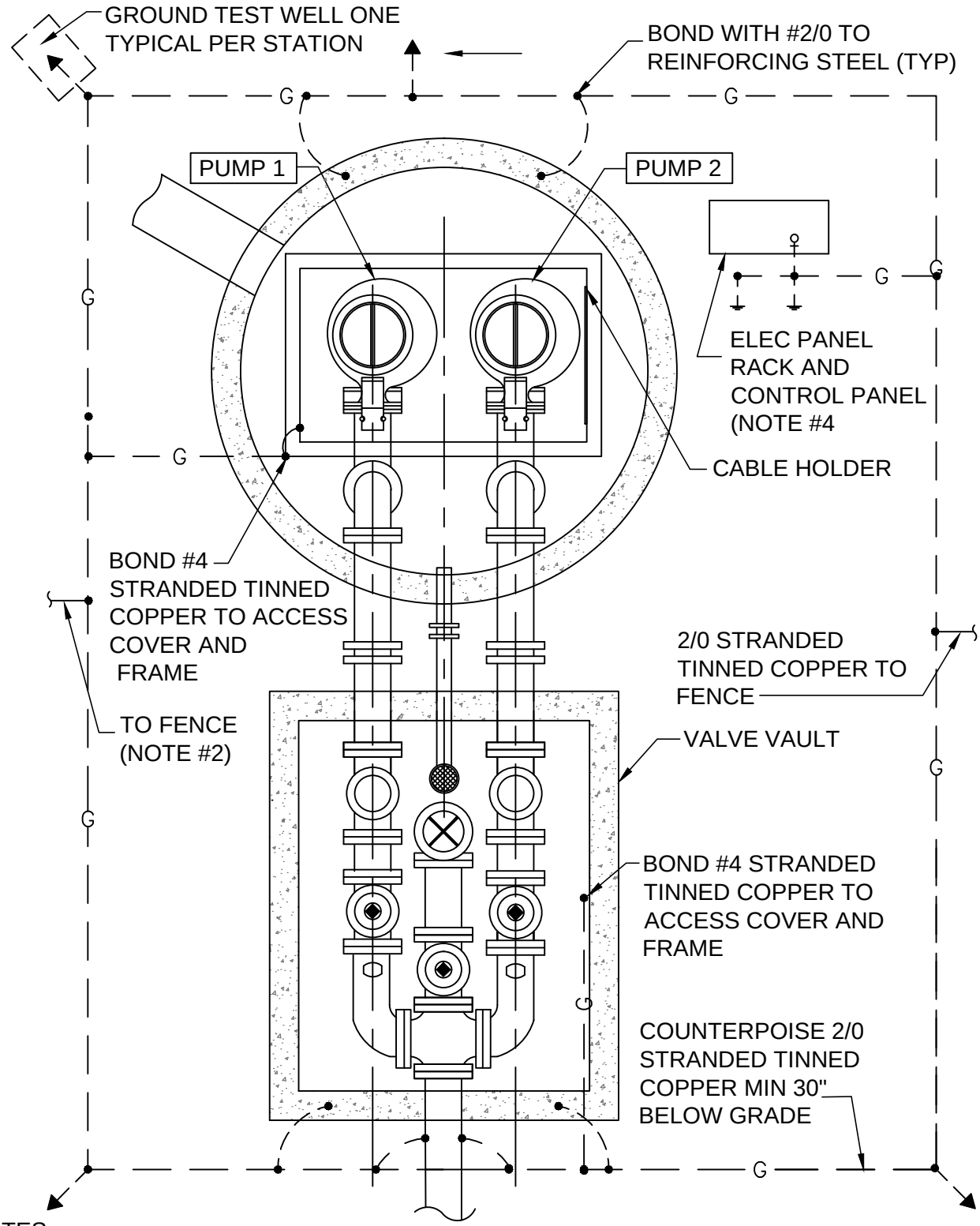

NOTES:

1. DETAIL IS GENERIC. SPECIFIC LOCATIONS OF EQUIPMENT MAY VARY.
2. TIE TO FENCE, MINIMUM 2 LOCATIONS. NOT REQUIRED WHERE BLOCK WALL OR WOOD FENCE IS INSTALLED.
3. PROVIDE EXOTHERMIC WELDS FOR ALL BELOW GRADE AND STRUCTURAL STEEL CONNECTIONS UNLESS NOTED OTHERWISE.
4. PROVIDE MINIMUM # 6 AWG XHHW INSULATED COPPER GROUND WIRE IN CONDUIR TO ALL ENCLOSURE BUS BARS FOR ENCLOSED GROUNDING. BOND MINIMU #2 TINNED COPPER GROUND WIRE TO ALL ELECTRICAL SUPPORT RACKS.

REV. : SEPTEMBER, 2014

LIFT STATION GROUNDING (TYPICAL)	**FIGURE WW-26-1**
POLK COUNTY UTILITIES, FLORIDA	**DECEMBER, 2010**

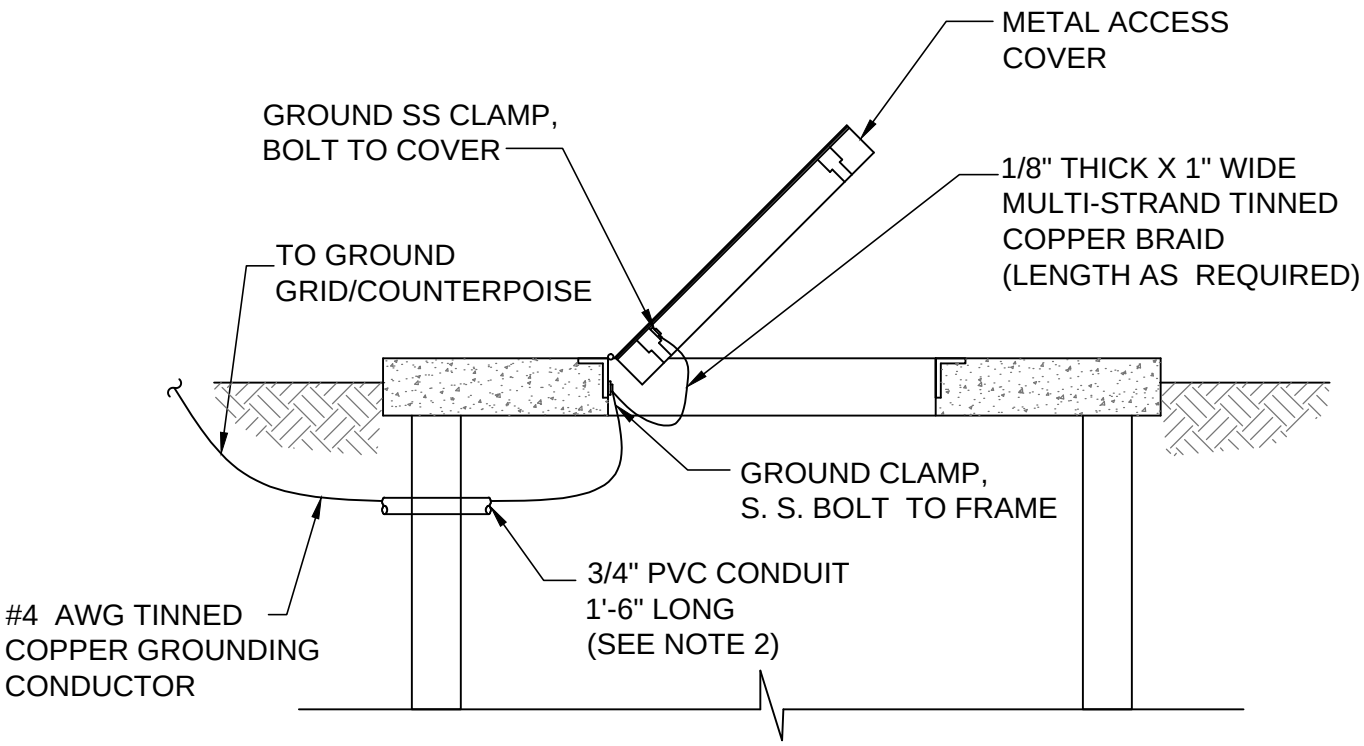

NOTES:

1. ON COVERS WITH MULTIPLE DOORS, PROVIDE BRAID FROM FRAME TO DOOR ON EACH DOOR PROVIDE WATERPROOF CAULKING WHERE GROUND CABLE AND CONDUIT PENETRATES WETWELL TO PREVENT INTRUSION OF GROUNDWATER AND ESCAPE OF VAPORS FROM WETWELL.
2. INSTALL GROUND WIRE SO THAT IT WILL NOT CROSS CLEAR OPENING OR PREVENT OR IMPEDE NORMAL METHOD OF REMOVING FLOATS OR PUMPS.

LIFT STATION COVER AND DOOR GROUNDING (TYPICAL)	**FIGURE WW-26-2**
POLK COUNTY UTILITIES, FLORIDA	**DECEMBER, 2010**

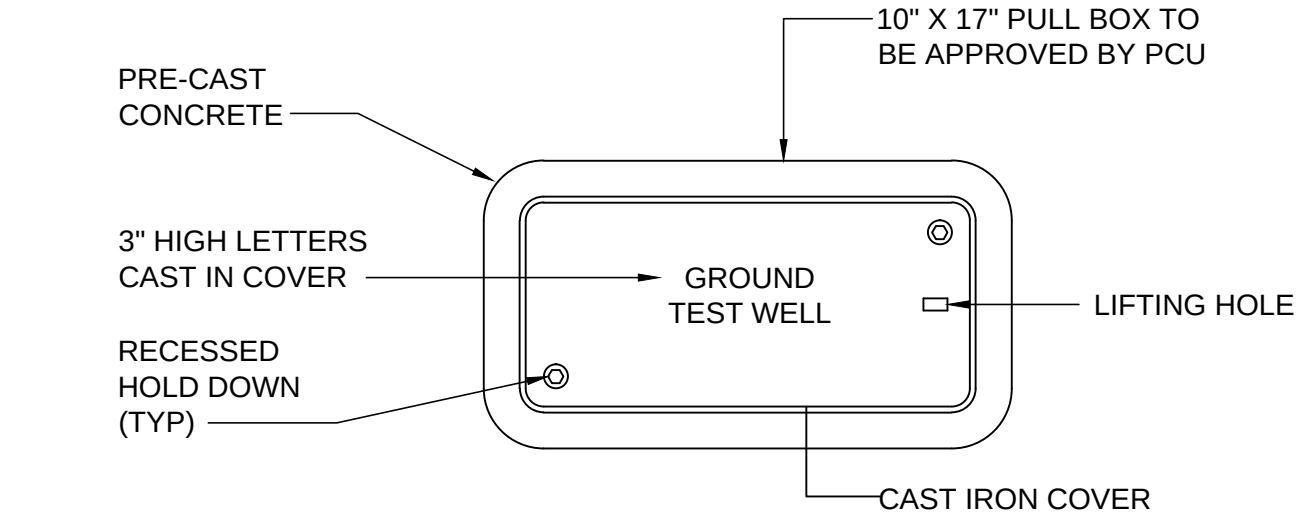

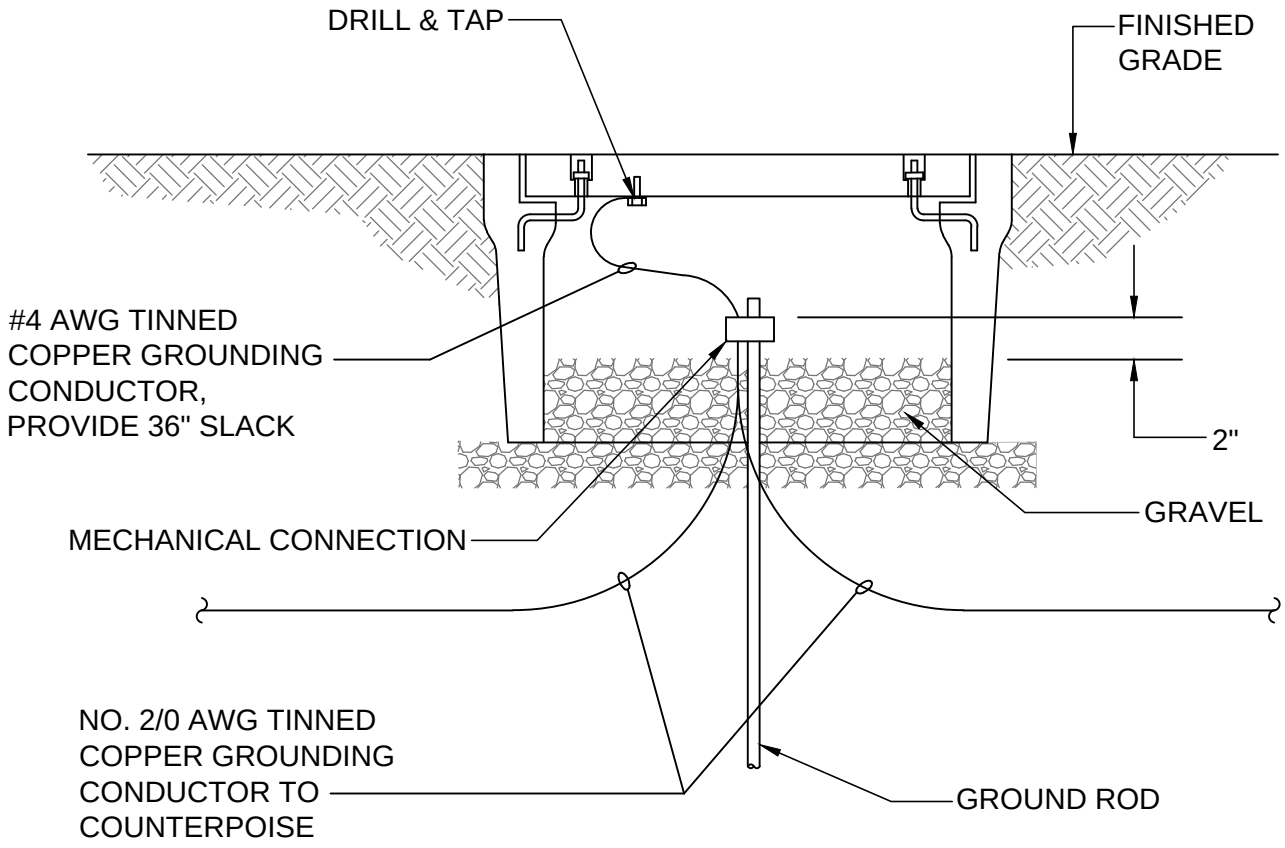

LIFT STATION GROUND TEST WELL	FIGURE WW-26-3
POLK COUNTY UTILITIES, FLORIDA	DECEMBER, 2010

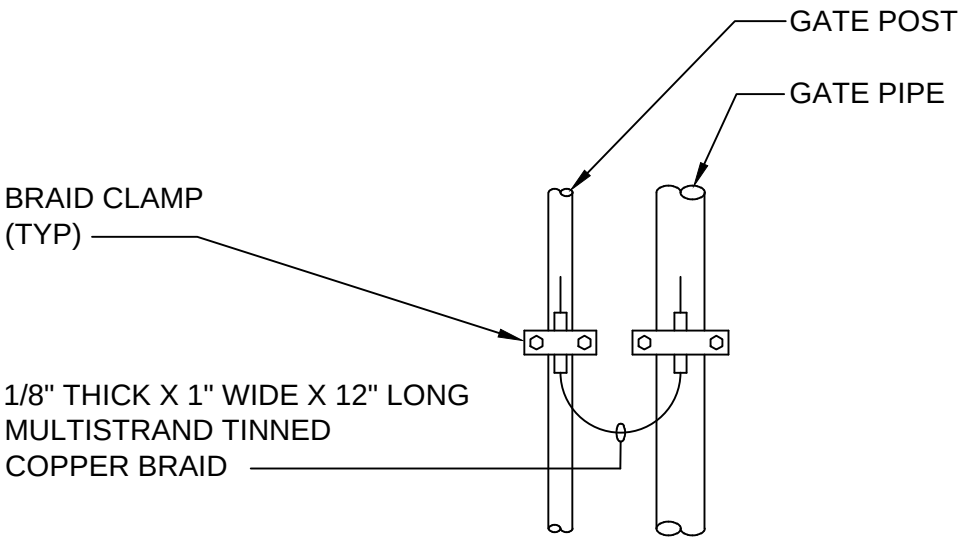

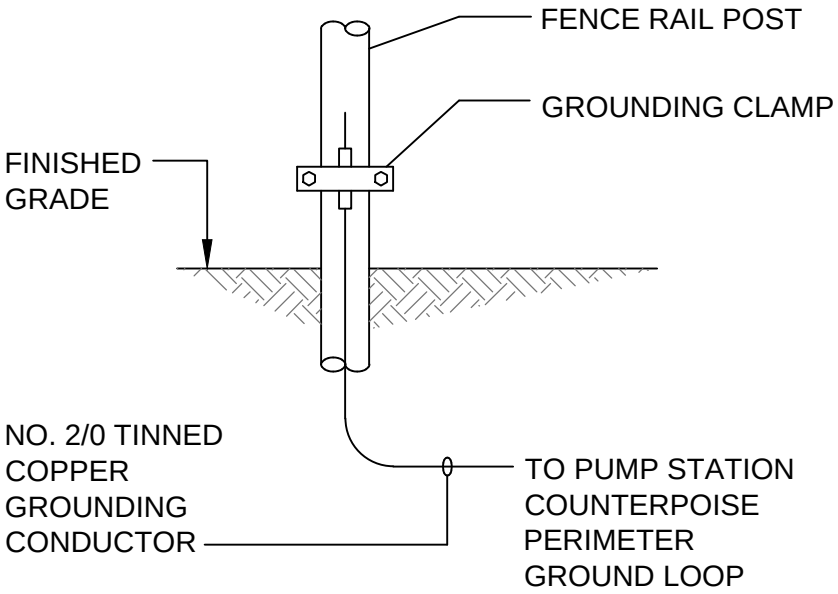

LIFT STATION FENCE POST GROUNDING (TYPICAL)	FIGURE WW-26-4
POLK COUNTY UTILITIES, FLORIDA	DECEMBER, 2010

THIS PAGE IS INTENTIONALLY BLANK

REV. : SEPTEMBER, 2014

SCADA PRESSURE SENSOR **WATER SERVICE**	**FIGURE** **WW-27**
POLK COUNTY UTILITIES, FLORIDA	**DECEMBER, 2010**

CHAPTER 6 RECLAIMED WATER Rev December 2012

Section 610 Reclaimed Water System Standards and Specifications December 2010

PART 1 - GENERAL

A. The use of reclaimed water shall be governed by and in accordance with the most current edition of the "Utilities Reclaimed Water Policy Manual", the "Utilities Standards and Specifications Manual", the LAND DEVELOPMENT CODE, the COMPREHENSIVE PLAN, the Florida Plumbing Code, and "Chapter 62-610, Reuse of Reclaimed Water and Land Application, Part III, FAC".

B. All reclaimed water pipes, piping, meter boxes, meter lids, meter dial faces, sprinkler heads, signage, and other related materials shall be appropriately identified and Pantone Purple 522C in color using light stable colorants.

PART 2 – NOT USED

PART 3 - MANDATORY CONNECTION

A. Connection to a public access quality reclaimed water system shall be in accordance with the COMPREHENSIVE PLAN, the LAND DEVELOPMENT CODE, and the "Utilities Reclaimed Water Policy Manual".

PART 4 – LOCATION

A. Refer to Chapter 4, "Potable Water System Standards and Specifications", Section 410, Part 2 - Location.

PART 5 - DESIGN BASIS

A. Reclaimed water systems shall be designed to promote efficient reclaimed water usage. Reclaimed water mains shall be designed for the estimated ultimate irrigation demand, based on the planned build-out of the DEVELOPMENT. The DEVELOPER is responsible for sizing of the mains and related infrastructure, only for his DEVELOPMENT. Individual single-family homes are exempt from providing design calculations for irrigation systems with one inch or smaller meters.

B. Average Daily Flows and Peak Flows for Single-Family Residential and Other Developments:

1. Reclaimed water demand shall be calculated in accordance with the most restrictive criteria contained in the documents referenced in Part 1(A) above; and
2. Irrigation zones shall be provided to uniformly distribute flows so that the maximum peak hourly factor is not exceeded. Alternate irrigation system designs will be evaluated on a case-by-case basis.

C. Minimum Main Sizing for Single-Family Residential Developments:

a. The peak hourly demand for reclaimed water mains shall be based on 50 percent of the lots irrigating simultaneously using a demand of 20 gpm per lot.
b. Irrigation System Design Calculations:

i. DEVELOPER's ENGINEER shall submit signed, sealed, and dated design calculations with the final construction plans for all reclaimed water distribution projects. Calculations shall show that reclaimed water mains will have sufficient hydraulic capacity to transport peak hourly flows. All head losses and minor losses shall be included in calculations. Based on the calculations derived in the Sections above, the DEVELOPER's ENGINEER shall recommend a meter size for each irrigation zone as approved by PCU.

PART 6 - DESIGN

A. Pipe Cover:

A minimum cover of 36 inches shall be provided.

B. Pressure:

All reclaimed water mains shall be designed using a pressure of 35 psi. For master metered systems, the reclaimed water pressure shall be a minimum of 20 psi for each service connection.

C. Diameter:

Only 4, 6, 8, 10, 12, 16, 20, 24, 30, 36, 42, 48, and 54-inch diameter water mains shall be permitted. Variations in main size may be authorized by the COUNTY when deemed appropriate provided that the existing or proposed level of service is maintained and operational maintenance and responsibility is established to the benefit of the COUNTY. Looped systems shall be required in low-density residential developments. Where looping of mains is not practical, the diameter of dead end mains shall be increased by one pipe size as based on hydraulic modeling.

D. Velocity:

Mains shall be sized so velocities do not exceed six feet per second under maximum daily flow conditions. In no case shall connections be made to cause velocities to exceed six feet per second in existing mains.

E. Design Friction Losses:

Friction losses through mains shall be based on the Hazen and Williams or Darcy-Wiesbach formulas. In the use of the Hazen and Williams formula, the value for "C" shall be 130 for all pipes.

F. Design Pressure and Restraint

1. The main and fittings, including all restrained joint pipe fittings shall be designed to withstand pump operating pressures and pressure surges, but not less than 150 psi.
2. The restrained joint lengths shall be calculated consistent with the table format shown in the STANDARD DRAWINGS.
3. In the event that it is necessary to locate proposed mains or leave existing mains longitudinally under any part of a proposed roadway subject to regular non-

residential traffic or with speed limits above 30 miles per hour, such mains shall have restrained joints.

G. Dead Ends:

1. In order to provide increased reliability of service and reduce head loss, dead ends shall be minimized by making appropriate tie-ins whenever practical, as determined by PCU.

H. Valves:

Sufficient valves shall be provided on mains so that inconvenience and sanitary hazards will be minimized during repairs. Inline valves shall be located no more than 500 feet apart in commercial, industrial, and high-density residential areas and no more than 1000 feet in all other areas. In addition, inline valves shall be utilized to isolate a maximum of 40 ERC's in order to reduce inconveniences to other customers. A minimum of two valves per tee and three valves per cross shall be required to isolate and maintain adequate service. Valves shall be placed at phase lines and located at the end of all water main extensions except at cul-de-sacs. The County reserves the right to require additional isolation valves at tees, crosses, etc. as necessary for system operation.

I. Combination Air/Vacuum Release Valves:

Automatic air release valves of appropriate size and number shall be installed in accordance with the STANDARD DRAWINGS to prevent air locking formation. Automatic combination air and vacuum release valves shall be utilized to prevent both air locking and vacuum formation. All such valves are required at significant high points of the main or as specified by PCU. Valves shall be clearly delineated on the profile view for each main in the PLANS. The ENGINEER shall submit calculations to PCU justifying the valve sizes and numbers as specified by AWWA M-51 "Air Release, Air/Vacuum, and Combination Air Valves".

J. Not Used

K. Booster Pumps:

Private in-line booster pumps are not permitted on RECLAIMED WATER SYSTEMs unless otherwise approved by POLK COUNTY.

L. Restrained Joints:

1. Pressure piping, fittings, and other items requiring restraint shall be restrained by assemblies or devices designed for the maximum pressure condition (test pressure) in accordance with the STANDARD DRAWINGS.

2. In the event that it is necessary to locate proposed mains or leave existing mains longitudinally under any part of a proposed roadway subject to regular non-residential traffic or with speed limits above 30 miles per hour, such mains shall have restrained joints or be constructed within steel casing(s).

M. Separation of Reclaimed Water Mains from Potable Water and Wastewater Systems:

Separation of reclaimed water, potable water, and wastewater system shall comply with FDEP regulations and PCU standards per the STANDARD DRAWINGS.

N. Materials:

1. Reclaimed water pipe shall be either PVC or ductile iron pipe.
2. HDPE may be used in specific applications as specified in this MANUAL or as approved by PCU. Using the PCU approved hydraulic modeling standards contained within this MANUAL, the ENGINEER shall determine on a case by case basis if it is necessary for all proposed HDPE pipe installations to be increased by one pipe size above all proposed or existing adjacent PVC and Ductile Iron Pipe installations.

O. Signage and Public Notice:

1. For all systems, there shall be readily identifiable "Reclaimed Water" or "Do Not Drink" notices, marking or coding on application/distribution facilities and appurtenances. Notification shall be accomplished by the posting of advisory signs designating the nature of the reclaimed project area where reclaimed is practiced, notes on scorecards or by other methods per the STANDARD DRAWINGS. Notification methods used include posting of advisory signs at entrances to residential neighborhoods, medians, right of ways, at the entrance to a golf course, and at the first and tenth tees. Advisory signs shall be posted adjacent to lakes or ponds used to store reclaimed water with a minimum of four signs or as determined by PCU. Advisory signs shall be posted at decorative water features that use reclaimed water and shall include the following text: "Do Not Drink" and "Do Not Swim" together per the STANDARD DRAWINGS.
2. The DEVELOPER shall be responsible for all cost incurred and installation of reclaimed water signage in accordance with FDEP regulations and PCU standards. The OWNER responsible for operation and maintenance of the private irrigation system shall also be responsible for maintenance of the signage.
3. PCU will be responsible for maintenance of signage for PCU RECLAIMED WATER SYSTEMs.

PART 7 - SYSTEM CONNECTION AND SERVICE CONNECTIONS

A. Reclaimed water services and connections shall conform to the applicable provisions of this MANUAL. Only 1-inch services are permissible for reclaimed installations at residential locations. 2, 4, 6, 8, 10, and 12-inch services may be permitted for non-residential locations. PCU may install services and connections to existing reclaimed water systems up to two-inch, after payment of applicable fees and charges. The CONTRACTOR shall furnish service connections for new main extensions.

PART 8 - WATER METERING

A. General:

All reclaimed water service connections shall be metered. In general, the method of metering will follow the guidelines listed below and is subject to PCU's determination of appropriateness.

1. All meters shall be in accordance with Section 3 of the "Utilities Administration Manual" and the MANUAL's "Approved Meters List".
2. An above ground meter assembly shall be required for all non-residential installations regardless of meter size.
3. Single family and duplex residential meters that are two inches or smaller shall be installed in PCU approved meter boxes.
4. On-site systems downstream of and served by a master meter assembly shall be maintained by the Homeowners Association, Owners Association, or the Property Owner unless otherwise determined and/or required by prevailing regulations or County requirements.
5. The ENGINEER shall obtain approval before finalizing the metering system design.
6. Unless specifically approved by PCU, meter boxes shall not be installed in sidewalks, driveways or areas subject to pedestrian or vehicular traffic.
7. Meters subject to vehicular traffic shall be installed in a traffic rated meter box.

B. Single Family, Duplex, and Town Homes Subdivisions with Public Rights of Way:

1. Each unit shall be individually metered. Meters shall be installed within the right-of-way in individual meter boxes as indicated in the STANDARD DRAWINGS
2. Town Homes Subdivisions shall install a master meter for individual buildings or groups of buildings.
3. On-site reclaimed water systems downstream of and served by a master meter assembly shall be maintained by the Homeowners Association, Owners Association, or Property Owner.

C. Single Family and Town Homes Subdivisions with Private Rights-of- Way:

1. If easements are dedicated over the entire private street common areas, individual meters may be permitted in accordance with PART 8 (B). Additionally, private streets shall meet COUNTY standards and sufficient area must be available outside of paved areas to locate water mains, services, and meters. If these criteria cannot be met, the subdivision shall be metered pursuant to PART 8, (D).
2. Town Homes Subdivisions shall install a master meter for individual buildings or groups of buildings.

3. On-site reclaimed water systems downstream of and served by a master meter assembly shall be maintained by the Homeowners Association, Owners Association, or Property Owner.

D. Commercial, Industrial, Institutional, Shopping Centers, Apartments, and Condominium Projects:

In general, all such projects shall require installation of a master meter assembly to service the entire development. In general, shopping centers and associated out parcels shall require installation of a single meter to service the entire development unless out parcels are adjacent to public right of way or otherwise approved by PCU.

E. Meter Installation:

1. Meters that are larger than two inches shall be installed by the DEVELOPER.
2. Installation of meters that are two inches and smaller will be performed by PCU.
3. Single family residential meters that are one inch and smaller in size shall be installed underground in an approved meter box.
4. All other meters shall be installed above ground and located in a Polk County Utilities Easement located adjacent to but outside of the public right of way per the STANDARD DRAWINGS.
5. Where meters are to be installed by PCU in an above ground assembly, the DEVELOPER shall install an appropriately sized lockable curb stop and meter box (if applicable) in the location designated for the meter in order to facilitate ease of installation of the meter by PCU.

F. Meter Sizing:

PCU shall approve the size and quantity of all meters. The ENGINEER shall recommend meter sizes and provide sufficient information on estimated average daily and peak flows to justify each meter size.

PART 9 – MATERIALS, INSTALLATION, AND TESTING

A. Applicable provisions of the MANUAL shall apply.

PART 10 – LOCATION AND IDENTIFICATION

A. A means for locating and identifying all reclaimed water mains and valves shall be provided in accordance with the MANUAL and the STANDARD DRAWINGS.

PART 11 - IRRIGATION WELLS

A. General:

Private wells shall not be connected to any portion of the PCU RECLAIMED WATER SYSTEM, either directed or indirectly, without the installation of an

approved cross connection control assembly on the customer's side of the reclaimed water meter.

B. Ground Water Protection:

Existing or proposed wells utilized for back-up supply of irrigation water to a private irrigation system shall be protected from reclaimed and non-potable water entering the well by either an air-gap or an approved cross connection control assembly.

PART 12 - ON-SITE STORAGE

A. The installation of an on-site storage facility with a backup irrigation well may be utilized with the approval of PCU. Said storage facility shall be separated from the reclaimed water system by an air-gap or an approved cross connection control assembly. The volume of the on-site storage ponds or tanks shall be equal to or greater than the annual average daily demand during a 24-hour period.

B. Single-family residential developments, where PCU will own, operate, and maintain the on-site distribution system are exempt from on-site storage requirements.

PART 13 - APPROVED USES OF RECLAIMED WATER

A. In addition to citrus groves, landscaping, and golf courses, other uses of reclaimed and non-potable water may be acceptable if the following requirements are met:

1. Specific approval by PCU.
2. All requirements of "Chapter 62-610, Reuse of Reclaimed Water and Land Application, Part III, FAC" are met.

B. Other Approved Uses of Reclaimed Water:

1. Construction dust control;
2. Outdoor aesthetic feature including fountains, ponds, and lagoons;
3. Cleaning roads, sidewalks and other outdoor work areas;
4. Industrial process water; and
5. Cooling towers.

PART 14 - PROHIBITED USES OF RECLAIMED WATER

A. The following uses of reclaimed water are prohibited:

1. Fire protection - the use of reclaimed water as a primary supply source for fire hydrants and fire sprinkler systems;
2. Toilet flushing - reclaimed water shall not be connected to any internal building plumbing fixture or piping utilized for toilet flushing or other potable water systems;
3. Laundry water supply;
4. Swimming pools or spas;

5. Single family residential air conditioning systems;
6. Vehicle washing, unless otherwise approved by FDEP for commercial car wash facilities;
7. Manufacture of ice for ice rinks; and
8. Hose bibs.

PART 15 - CROSS CONNECTION CONTROL

A. General:

Cross connection control requirements shall be as specified in the "Cross Connection Control Policy Manual".

PART 16 – PROTECTION OF RECLAIMED WATER SYSTEM

A. General:

1. DEVELOPMENTS that use reclaimed water with chemical injection and/or storm water augmentation systems that add potential contaminants such as fertilizer, pesticides, algaecides, etc., shall as a minimum, require installation of an approved double check valve cross connection control assembly. Projects with a higher degree of hazard, such as saline solutions, etc., may be required to install an approved reduced pressure principle cross connection control assembly.

B. Location and Installation:

All cross connection control assemblies required under the above conditions shall be installed and maintained in accordance with the "Cross Connection Control Policy Manual".

PART 17 - CONSTRUCTION

17.01 SCOPE OF WORK

A. These specifications cover the pipes, fittings, and appurtenances used for reclaimed water distribution systems.

B. The CONTRACTOR shall replace, at his expense, all materials found to be defective or damaged in handling or storage. The CONTRACTOR shall, if requested by PCU, furnish certificates, affidavits of compliance, test reports, or samples for analysis for any of the materials specified herein. All pipe delivered to project site for installation is subject to random testing for compliance with the designated specifications.

C. Pipe and fitting interior linings shall conform to ANSI/NSF 61 list of approved materials standard.

D. Reclaimed water mains, water service piping, and connections shall be installed as indicated in the STANDARD DRAWINGS.

E. Fire hydrant assemblies shall not be installed on any part of a reclaimed water system.

PART 18 -PRODUCTS

18.01 PIPE MATERIALS

A. PVC Pipe:

PVC reclaimed water distribution mains shall be manufactured in accordance with AWWA standard C900, C905, or C909, latest edition. Pipe that is 4 to 12 inches in diameter shall be C900 and have a dimension ratio of 18. Pipe larger than 12 inches in diameter shall be C905 or C909 and have a dimension ratio of 25. Pipe shall be pantone purple 522c in color.

B. Ductile Iron Pipe:

Ductile iron pipe shall conform to ANSI/AWWA A21.51/C151. Pipe shall be pressure class 350 for 3-inch to 12-inch, pressure class 250 for 16-inch to 20-inch, pressure class 200 for 24-inch, and pressure class 150 for 30-inch to 64-inch.

C. HDPE Pipe:

HDPE pipe shall be in accordance with AWWA C906 and shall have an outside diameter equal to ductile iron pipe for the same size. Pipe shall have a minimum dimension ratio of 11 for use with ductile iron pipe fittings and have a working pressure of 150 psi. Pipe shall have integral pantone purple 522c in color identification stripping. All HDPE pipe and tubing shall be at least one pipe size larger than adjacent PVC and Ductile Iron Pipe.

18.02 JOINT MATERIALS

A. PVC Pipe Joints:

1. PVC pipe shall have integral bell push on type joints conforming to ASTM D3139.
2. Fusible PVC pipe lengths, as used in horizontal directional drill applications only, shall be assembled in the field with butt fused joints. The CONTRACTOR shall follow the pipe supplier's written guidelines for this procedure. All fusion joints shall be completed as specified by the pipe supplier and this MANUAL.

B. Ductile Iron Pipe Joints:

Joints for ductile iron pipe shall be push-on or mechanical joints conforming to ANSI/AWWA A21.11/C111., Restrained or flanged joints shall be provided where called for in the PLANS. Flanged points shall conform to AWWA C115.

C. HDPE Pipe Joints:

HDPE joints shall conform to AWWA C906.

18.03 FITTINGS

A. Ductile Iron and PVC Pipe:

Fittings shall be mechanical joint ductile iron compact fittings in accordance with ANSI/AWWA A21.53/C153.

B. HDPE Pipe:

1. Fittings used with HDPE pipe shall be mechanical joint ductile iron compact fittings in accordance with ANSI/AWWA A21.53/C153 unless otherwise specifically approved by PCU.

18.04 COATINGS AND LININGS FOR DUCTILE IRON PIPE AND FITTINGS

A. Ductile iron pipe and fittings shall have an interior protective lining of cement-mortar with a seal coat of asphaltic material in accordance with ANSI/AWWA A21.4/C104. Exterior ductile iron pipe shall be coated with asphaltic material in accordance with a minimum one mil thick in accordance with ANSI/AWWA A21.51/C151.

B. Additional Applied Exterior Coatings for Above Ground Pipe and Fittings

Pipe, fittings, and valves shall be thoroughly cleaned and given one field coat (minimum 1.5 mils dry thickness) of rust inhibitor primer in addition to the factory applied coat of rust inhibitor primer. Intermediate and finished field coats of Alkyd shall also be applied by the CONTRACTOR to a minimum 1.5 mil dry thickness for each coat. Primer and field coats as specified in the appropriate "Approved Materials Checklist" shall be compatible and be applied in accordance with the manufacturer's recommendations. The final field coat shall be Pantone 522c purple for finished reclaimed water.

18.05 POLYETHYLENE ENCASEMENT

A. Polyethylene encasement shall be in accordance with ANSI/AWWA A21.51/C105 with wrapping colors to be Pantone 522c purple. Polyethylene encasements are required in accordance with C105 and when crossing, or adjacent to, power easements and gas easements.

18.06 SERVICE PIPE, STOPS, FITTINGS, AND SERVICE SADDLES

A. Service Connections at Main:

1. Service connections of one and two-inches shall be brass body reduced port type corporation stops, equipped with connections compatible with the polyethylene tubing and threaded in accordance with specifications in AWWA C800, AWWA C901, and shall comply with NSF-61. One and two-inch services at the water main shall have connections for female iron pipe by female iron pipe thread, conforming to AWWA C509.
2. Service connections, 4-inch through 12-inch, shall have iron body resilient seat gate valves.
3. Service taps for air release valve installations shall utilize a 2-inch brass ball type corporation stop.

B. Service Pipe:

1. One-inch and two-inch service lines shall be Pantone 522c purple polyethylene tubing, conforming to specifications in AWWA C800, SDR 9, and AWWA C901.
2. Service lines, that are 4, 6, 8, 10, and 12 inches in size, shall be as water main pipe.

C. Service Control Valves at Property Line:

1. One-inch and two-inch size service control valves shall be reduced port ball valves, made of brass, cast and machined in accordance with specifications in AWWA C800, AWWA C901, compliant with NSF-61 and compatible polyethylene tubing connections.
2. For connections larger than two-inches, the CONTRACTOR shall provide resilient seat gate valves.

D. Service Fittings:

1. One-inch and two-inch fittings shall be brass, cast and machined in accordance with specifications in AWWA C800 and AWWA C901, and shall comply with NSF-61 with compatible polyethylene tubing connections.
2. Fittings, that are 4, 6, 8, 10, and 12 inches in size, shall be the same as reclaimed water main fittings.

E. Service Tapping Saddles:

1. Stainless Steel Service Saddles:

   Epoxy or nylon coated stainless steel, 18-8 type 304 straps, AWWA tapered threads, two inches to be iron pipe threads. Controlled OD saddles to be used on C900 and IPS OD PVC pipe, double straps to be 2-inch minimum width each, single strap to be minimum of three inches wide.

2. Service Connections:
   a. PVC and HDPE Pipe Service Saddle:
      i. One-inch and two-inch services utilize brass body saddle with controlled OD.
      ii. Four-inch or larger services shall be mechanical tapping sleeves, stainless steel sleeve for size on size taps, or epoxy coated sleeve with stainless steel hardware for all other sizes.
   b. Ductile Iron Pipe Service Saddle:
      i. One-inch and two-inch services shall use a controlled OD service tapping saddle with stainless steel straps and a ductile iron body that is either nylon or epoxy coated.
      ii. Four-inch or larger services shall be mechanical tapping sleeves, stainless steel sleeve for size on size taps, or epoxy coated sleeve with stainless steel hardware for all other sizes.

18.07 RESILIENT SEAT GATE VALVES

A. Gate valves shall be resilient seat gate valves, manufactured to meet or exceed the requirements of AWWA C515, latest revision, and in accordance with these SPECIFICATIONS. Valves shall have an unobstructed waterway equal to or greater than the full nominal diameter of the valve. Valves shall have a minimum pressure rating of 150 psi.

B. Valves that are 16 inches and larger shall have side actuators. The valve body, bonnet, and bonnet cover shall be ductile iron ASTM A126, Class B. All ferrous surfaces inside and outside shall have a fusion-bonded epoxy coating in accordance with AWWA C 550. A two-inch wrench nut shall be provided for operating the valve. All valves are to be tested in strict accordance with AWWA C515.

C. Directional Opening:

All valves shall open left or counter clockwise.

D. The valves shall be non-rising stems with the stem made of cast, forged, or rolled bronze as specified in AWWA C515. Two stem seals shall be provided and shall be of the O-ring type. The stem nut must be independent of the gate.

E. The resilient sealing mechanism shall provide zero leakage at test and normal working pressure when installed with the line flow from either direction.

18.08 BUTTERFLY VALVES

A. Typically, butterfly valves shall not be installed within any PCU system, except directly adjacent to storage tanks for isolation purposes or as specifically approved by PCU for control meter assemblies.

B. Butterfly valves and operators shall conform to the "AWWA Standard Specifications for Rubber Seated Butterfly Valves", Designation C504, latest version, except as hereinafter specified, shall be Class 150A or B.

C. The valve body materials shall be epoxy coated inside and out as per AWWA C550. The valve body shall be constructed of close grain cast iron per ASTM A126, Class B or equivalent material. All retaining segments and adjusting devices shall be of corrosion resistant material.

D. Valve seats shall be a natural rubber or synthetic rubber compound. Valve seats shall be field adjustable and replaceable without dismounting operator disc or shaft and without removing the valve from the line. All retaining segments and adjusting devices shall be of corrosion resistant material.

E. The face-to-face dimensions of valves shall be in accordance with above-mentioned AWWA specification for short-body valve.

F. Should PCU find it necessary to install butterfly valves along mains that are 16 inches in diameter or larger, a 6-inch minimum bypass with one gate valve shall be installed around each valve.

G. The valve shaft shall be turned, ground, and polished constructed of 18-8 stainless steel and designed for both torsional and shearing stresses when the valve is operated under its greatest dynamic or seating torque. Shaft shall be of either a one-piece unit extending full size through the value disc and valve bearing or it may be of a stub shaft design.

H. Valve Actuator:

In general, the butterfly valve actuators shall conform to the requirements of AWWA standard specifications for "Rubber Seated Butterfly Valves, Designation C504", insofar as applicable.

I. Directional opening:

All valves shall open left or counter clockwise.

18.09 VALVE BOXES

A. Standard Three-Piece Cast Iron Valve Box:

Three-piece valve boxes are required for mains less than six feet below finished grade as indicated in the STANDARD DRAWINGS. Valve boxes shall meet AWWA standards and be provided with suitable heavy duty ductile or cast iron bonnets and shall extend to such elevation at or slightly above the finished grade surface as directed by PCU. The barrel shall be screw type only and have a 5-1/4-inch shaft. The upper section shall have a flange at the bottom having sufficient bearing area to prevent settling and shall be complete with cast iron covers. Ductile or cast iron covers shall have "RECLAIMED" cast into the top for all water mains.

B. Valve Box Assembly:

Valve box assemblies, as indicated in the STANDARD DRAWINGS, are required for any size main whenever the top of the valve nut is six feet or deeper below the finished surface elevation that is directly above the valve location. Valve boxes shall be one complete assembled unit composed of the ductile or cast iron valve box with a 5-1/4 inch barrel shaft and steel extension stem that attaches to the valve body. All moving parts of the extension stem shall be enclosed in a housing to prevent contact with the soil. Valve box assembly shall be adjustable to accommodate variable depths.

C. The stem assembly shall be of a telescoping design that allows for variable adjustment length. The material shall be galvanized square steel tubing. The stem assembly shall have a built-in device that prevents the stem assembly from disengaging at its fully extended length. The extension stem must be capable of surviving a torque test to 1,000 ft-lb without failure.

D. Valve boxes, located in roadways with speed limits above 30 miles per hour or on mains that are 16 inches in diameter or larger, shall have locking lids utilizing a five sided nut

with a special wrench needed to open. Valve lids to be made as shown in the STANDARD DRAWINGS.

E. A test station box shall be installed into the valve pad for the placement of the locating wire as shown in the STANDARD DRAWINGS. The test station box shall be as specified in the appropriate "Approved Materials Checklist".

F. Locating wire shall be 14-gauge single strand solid core copper wire with insulation. The color of the insulation shall be the same color as the color code for the pipe being installed.

G. Each valve marker shall be made of bronze with each specific valve's information clearly imprinted on its top surface, provided with a hanger pin, and installed in each valve collar as shown in the STANDARD DRAWINGS.

18.10 AIR RELEASE VALVES

A. Valves for use in reclaimed water mains shall be single body type valves designed to release large quantities of air at start up, admit air on shut down and release air in operation. Automatic combination air and vacuum release valves shall be utilized to prevent both air locking and vacuum formation. Valves shall be made of either high strength plastic with corrosion resistant polymer materials or have a cast iron body, cover and baffle, stainless steel float, bronze water diffuser Buna-N or Viton seat and stainless steel trim. Valves must be installed in an above ground enclosure as shown on the STANDARD DRAWINGS. Fittings from the main to the air release valve in the enclosure shall be threaded and made of brass.

PART 19 CONSTRUCTION

19.01 MATERIAL IDENTIFICATION AND TESTING

A. Pipe Identification and Location:

1. Each length of pipe shall bear the name or trademark of the manufacturer, the location of the manufacturing plant, and the class or strength classification of the pipe. The markings shall be plainly visible on the pipe barrel. Pipe, which is not clearly marked, is subject to rejection. The CONTRACTOR shall remove all rejected pipe from the project site within five working days.
2. All PVC pipe and other pipe that is factory color-coded on the outside surface of the pipe shall be identified and locatable as specified in the STANDARD DRAWINGS. All D I pipe, and other pipe not factory color-coded on the outside surface, shall be identified as specified in the STANDARD DRAWINGS. DI pipe shall meet all applicable requirements of AWWA C151. Where the above type of identification method is not considered to be practical by PCU, the pipe shall have a field applied three inch wide permanent Pantone 522c purple paint stripe down the top outside center of the pipe along its entire length.

B. Material Testing Requirements:

1. If requested by PCU, a sample of pipe to be tested shall be selected at random by PCU or the testing laboratory hired by PCU.
2. When the samples tested conform to applicable standards, all pipe represented by such samples shall be considered acceptable based on the test parameters measured. Copies of test reports shall be available before the pipe is installed on the project.
3. In the event that any of the test samples fail to meet the applicable standards, all pipe represented by such tests shall be subjected to rejection. The CONTRACTOR may furnish two additional test samples from the same shipment or delivery, for each sample that failed and the pipe will be considered acceptable if all of these additional samples meet the requirements of the applicable standards. All such retesting shall be at the CONTRACTOR's expense.
4. Pipe, which has been rejected by PCU, shall be removed from the site of the work by the CONTRACTOR and replaced with pipe that meets these specifications.

19.02 SEPARATION OF MAINS

A. Separation shall be in accordance with the STANDARD DRAWINGS.

19.03 INSTALLATION OF VALVES

A. All valves shall be inspected upon delivery in the field to insure proper working order before installation. They shall be set and jointed to the pipe in the manner as set forth in the AWWA Standards for the type of connection ends furnished. All valves and appurtenances shall be installed true to alignment and rigidly supported. Any damage to the above items shall be repaired to the satisfaction of PCU before they are installed.

19.04 NOTIFICATION OF CONNECTION TO EXISTING MAINS

A. PCU shall be notified at least five NORMAL WORKING DAYS in advance to schedule main connections and valve operations. All existing valves are to be operated only by PCU. All valves installed are to remain closed during construction.

The CONTRACTOR shall exercise extreme caution when excavating in proximity of PCU mains. PCU main locations shown on plans are not exact or guaranteed. The CONTRACTOR is responsible for field verifying existing utility locations. PCU dispatch operator shall be notified immediately in the event of a force main, water main, or reclaimed water main break or damage. The CONTRACTOR shall immediately repair all damage to PCU mains, at the CONTRACTOR's expense. If the repair is not made in a timely manner, as determined by the PCU Inspector, PCU may perform repairs and the CONTRACTOR will be charged for repairs.

19.05 RECLAIMED WATER SERVICE LOCATION AND IDENTIFICATION

A. The location of all service lines shall be as shown on the STANDARD DRAWINGS. On curbed streets, the exact location of each service shall be adequately and permanently identified using durable plastic purple (pantone 522c) colored pavement markers that states "Reclaimed Water Service" and "Call Before You Dig" as specified by the appropriate "Approved Materials Checklist". Each marker shall be securely attached to the curb in accordance with the manufacturer's guidelines approximately 6 inches from the top of the curb.

B. Where no curb exists, the exact location of each service shall be adequately and permanently identified using durable plastic purple (pantone 522c) colored pavement markers that states "Reclaimed Water Service" and "Call Before You Dig" as specified by the appropriate "Approved Materials Checklist". Each marker shall be securely attached to the pavement in accordance with the manufacturer's guidelines approximately 6 inches from the edge of pavement.

19.06 RECLAIMED WATER VALVE LOCATION AND IDENTIFICATION

A. The location of all service lines shall be as shown on the STANDARD DRAWINGS. On curbed streets, the exact location of each service shall be adequately and permanently identified using durable plastic purple (pantone 522c) colored pavement markers that states "Reclaimed Water Valve" and "Call Before You Dig" as specified by the appropriate "Approved Materials Checklist". Each marker shall be securely attached to the curb in accordance with the manufacturer's guidelines approximately 6 inches from the top of the curb.

B. Where no curb exists, the exact location of each service shall be adequately and permanently identified using durable plastic purple (pantone 522c) colored pavement markers that states "Reclaimed Water Valve" and "Call Before You Dig" as specified by the appropriate "Approved Materials Checklist". Each marker shall be securely attached to the pavement in accordance with the manufacturer's guidelines approximately 6 inches from the edge of pavement.

CHAPTER 6 RECLAIMED WATER
Section 611 Reclaimed Water SCADA Specifications May 2013

PART 1 – GENERAL RECLAIMED WATER SCADA STANDARDS

1.01 SUMMARY OF SYSTEM

A. These standards represent minimum requirements for County projects at the time the standards were adopted. The County reserves the right to approve changes based on site specific design requirements.

B. Reclaimed water storage and pumping facilities shall be able to be monitored and controlled remotely. The CONTRACTOR shall provide a Remote Terminal Unit (RTU) and integration with Supervisory Control and Data Acquisition as identified in this Section. Additional reference for remote control panels is included in Section 517.

C. The SCADA process data shall be organized as identified below:

Process Name

Inlet Flow

Chemical Storage and Feed

Reclaimed Storage

High Service Repumping With Flow Rate

Electrical Power

1.02 EQUIPMENT TO BE MONITORED AND CONTROLLED

A. The following typical elements at standard unit processes must be monitored and controlled at the various unit processes with alarms as defined:

a. Influent Flow Meter

Monitored Data

1. Instantaneous Flow
2. Totalized Daily Flow, Current and Previous Day

Alarms

1. Out of Range
2. No Signal

b. Chemical Storage and Feed

i. Chemical Feed and Monitoring

Monitored Data

1. Sodium Hypochlorite Level/Volume
2. Sodium Hypochlorite Pump Status
3. Sodium Hypochlorite Pump Stroke
4. Sodium Hypochlorite Pump Speed
5. Exhaust Fan Status
6. Eye Wash Status

Alarms

1. Sodium Hypochlorite Pump Failure
2. Exhaust Fan Failure

3. Eyewash In Use or Failure
4. High Sodium Hypochlorite Level
5. Low Sodium Hypochlorite Level

c. Ground Storage
   i. Levels/Valves
      Monitored Data
      1. Ground Storage Tank Levels
      2. Calculated Ground Storage Tank Volumes
      3. Calculated Rate of Change (gpm) in Storage
      Alarms
      1. High Ground Storage Level
      2. Low Ground Storage Level
      3. Valve Failure

d. Reclaimed High Service Pumping
   i. Pumps
      Monitored Data
      1. Pump Motor Status
      2. VFD Speed
      3. Pressure
      4. Flow Rate
      Alarms
      1. Pump Over-Torque
      2. Pump Fail
      3. Flow Out of Range
      4. High Pressure
      5. Low Pressure

e. Electrical Power
   i. Electrical Line Power
      Monitored Data
      1. Phase Voltage Difference
      2. Phase Amperage
      3. Tie-Breaker Status
      4. Main Breaker Status
      Alarms
      1. Low Voltage
      2. High Voltage
      3. Loss of Power
   ii. Generator Power
      Monitored Data
      1. Generator Status
      2. Phase Voltage Difference
      3. Phase Amperage
      4. Transfer Switch Status
      Alarms
      1. Low Voltage

2. High Voltage
3. Generator Failure
4. Transfer Switch Failure

1.03 DATA TO BE STORED IN HISTORIAN

A. The following typical data are standard and alarm at unit processes. Historical data shall be stored at a minimum rate of one point every ten seconds, or a change greater than a set dead-band, and shall be stored as defined:

a. Influent Flow Meter

Monitored Data

1. Instantaneous Flow
2. Totalized Daily Flow, Current and Previous Day

b. Chemical Storage and Feed

i. Chemical Feed and Monitoring

Monitored Data

1. Sodium Hypochlorite Level/Volume
2. Sodium Hypochlorite Pump Status
3. Sodium Hypochlorite Pump Stroke
4. Sodium Hypochlorite Pump Speed
5. Exhaust Fan Status
6. Eye Wash Status

Alarms

1. Sodium Hypochlorite Pump Failure
2. Exhaust Fan Failure

c. Ground Storage

i. Levels/Valves

Monitored Data

1. Ground Storage Tank Levels
2. Calculated Ground Storage Tank Volumes

Alarms

1. Valve Failure

d. Reclaimed High Service Pumping

i. Pumps

Monitored Data

1. Pump Motor Status
2. VFD Speed
3. Pressure
4. Flow Rate

Alarms

1. Pump Fail

e. Electrical Power

i. Electrical Line Power

Monitored Data

1. Phase Voltage Difference

2. Phase Amperage
3. Tie-Breaker Status
4. Main Breaker Status

Alarms

1. Low Voltage
2. High Voltage
3. Loss of Power

ii. Generator Power

Monitored Data

1. Generator Status
2. Phase Voltage Difference
3. Phase Amperage
4. Transfer Switch Status

Alarms

1. Low Voltage
2. High Voltage
3. Generator Failure
4. Transfer Switch Failure

PART 2 – COMPONENTS AND INTEGRATION

2.01 SOFTWARE, RTU, and NETWORK COMPONENTS

A. The CONTRACTOR shall purchase and install software and equipment compatible with the PCU existing SCADA central station equipment, as defined below.

1. Reclaimed Water SCADA controls must be integrated utilizing iFix with the licenses for the latest version supplied as part of the construction effort. CONTRACTOR must verify and utilize the iFix version currently in use by PCU prior to integrating PLC/SCADA. The controls for the remote Reclaimed Water location shall be integrated into the Wastewater Treatment Plant control system which is supplying effluent to the remote site.

2. CONTRACTOR shall integrate the remote Reclaimed Water site such that the pages are mapped into the Wastewater Treatment Facility control system as a remote unit process. The mapping shall allow for sufficient buttons to go to the remote site or return to the main wastewater plant control system seamlessly.

3. iFix and Historian licenses must be upgraded with sufficient tags for at least 30% spare tags.

4. Radio propagation studies shall be performed during design and construction of proposed Reclaimed Water RTU panels to ensure functionality of radio

system at time of integration.

A. The SCADA/RTU equipment shall be in conformance with the appropriate "Approved Materials Checklist". Qualified suppliers shall provide system warranties. At a minimum, the SCADA/RTU supplier must have the following qualifications:

1. Certified Motorola ACE-3600 solutions provider indicating that the supplier was Motorola trained to insure proper software configuration, application and functionality of the RTU.

2. Motorola contract indicating the supplier has a formal licensing agreement with Motorola to resell ACE-3600 components is required to ensure that the supplier can receive warranty, application and technical support of Motorola to the benefit of PCU.

B. Control panels must be fabricated in an UL-508A panel shop. The RTU shall be manufactured to comply with UL-508A and have a UL sticker with registration affixed in accordance with UL standards.

C. SCADA shall consist of RTUs, field interface units/front end processors (FIU/FEPs) and multiple redundant SCADA computers operating with Human Machine Interface (HMI) software. Lift station SCADA shall be compatible with PCU's 800 MHz trunked radio system or current wireless communication system.

1. A complete RTU shall be installed in a single RTU control panel enclosure. The RTU shall be compatible with and provide all the functionality and features of PCU's existing wireless SCADA system. The RTU shall be the latest edition of Motorola ACE-3600 with Motorola SCADA RTU software. The SCADA/RTU supplier shall provide the specified RTU hardware and software.

2. The pump control panel shall also operate independently of the SCADA/telemetry system in the event of failure of the remote communications link. The RTU shall be supplied in a NEMA 4X 304 Type SS powder coated white enclosure. The RTU shall be the latest edition of Motorola ACE-3600 to ensure compatibility with existing equipment and the specified I/O requirement.

3. The SCADA RTU and back-up control panels shall house the control devices, PLC, RTU, displays and necessary accessories, wiring and terminal blocks required for a full operational system. Panel doors shall be equipped with a door latch kit or fast operating clamp assembly, as applicable. Panels shall operate on 120 VAC control voltage and shall develop other required voltages internally.

4. HMI and HMI software shall be provided to view and change PLC parameters and to display alarm messages. The HMI shall be a touch screen type.

D. The RTU shall provide local automatic monitoring of instrumentation identified in section 1. Inputs shall be provided for both digital inputs and analog (4 to 20 milliamps DC) transducers. If a critical analog level sensing device fails, then an alternate level sensing device(s) shall be automatically activated. Analog sensors and specific float alarms shall report to the central HMIs if floats operate out of

sequence. The RTU shall be supplied with an input for an emergency "high level float". Battery backup power shall be provided so that monitoring is maintained during utility power failures.

E. Local manual pump control is provided by "Hand-Off-Auto" (HOA) switches, located in the pump control panel. In the absence of RTU power, or in the case of a RTU failure, the pump motor starters shall remain operational in the "hand" position. In no case shall the RTU have the capability to operate or override the pumps in the "hand" or "off" positions. HOA switches shall be reported back to the central HMIs when a switch has been set in the "hand", "off" or "auto" positions.

F. The capability to remotely override or disable individual pumps shall be provided.
These functions shall be logged with a time stamp at the redundant central HMIs.

G. The capability to remotely disable the pump station shall be provided. This function shall be logged with a time stamp at the redundant central HMIs.

H. All assemblies shall be UL listed and

approved.

I. RTU Mountings:

1. Outdoors

a. The RTU shall be housed in a dust-proof, water-proof, NEMA 4X, Type 304,14-gauge stainless steel enclosure that includes a door seal, rain drip guard, powder coated white, lockable, and three-point handle type latching mechanism. Exterior hardware and hinges shall be stainless steel.

b. A stainless steel sunshield shall be provided for the panel. The sunshield shall be powder coated white and provide shielding to the panel on the top, left and right sides.

2. Indoors (Dry location within non-corrosive environment)

a. The RTU shall be mounted in a NEMA 12, steel enclosure with a lockable, three point latching mechanism.

J. A 14-gauge painted steel back panel shall be provided to mount all electrical control devices.

K. Wiring:

All wiring to the control devices within the RTU panel shall be harnessed and permanently attached to the panel. Stick-on tie wrap fasteners are not acceptable. Wiring shall be supported a minimum of every eight inches. The panel shall be grounded via stud located in the bottom hinged side and bonded to the enclosure and ground buss.

L. There shall be a permanently affixed document pocket in the interior side of the exterior enclosure door to include a laminated wiring diagram and bill of

materials.

M. No devices or equipment shall be mounted to the top of the control panel enclosure, exclusive of the radio antenna.

N. Paint:

The enclosure, sub-panel and dead front operator panel shall be painted with heat fused polyester powder, electro-statically applied paint on a phosphatized base. The enclosure shall be white, inside and outside. The interior panels shall be silver-tek bronze.

O. Environmental Ratings:

All components shall be able to operate at –22 degrees Fahrenheit or lower to 140 degrees Fahrenheit and higher at 95 percent humidity.

P. RTU Panels:

a. RTUs shall meet the following criteria:

i. Motorola ACE-3600 as required;

ii. 4-watt, 800 MHz trunked radio or a radio able to communicate with the PCU wireless system;

iii. Mixed input/output, as required to meet specific IO with 25% spare;

iv. NEMA stainless steel powder coated white enclosure;

v. Battery backup; and

vi. 120 VAC, 8-amp power supply.

b. The unit shall have a 120 VAC surge suppressor installed directly on the AC main terminals.

c. A minimum two 120 VAC, circuit breakers shall be installed; one sized for the RTU and the second for auxiliary power.

d. All internal wiring shall conform to UL standards and be fully point-to-point labeled using permanent wire markers.

Q. RTU Software Application:

Each RTU shall have the latest RTU SCADA application license compatible with the existing central configuration. Software functionality and algorithms shall perform all of the functions described in the design drawings. Proven debugged software shall be provided to perform the functions listed under each lift station type. The complete annotated software application and a copy of the latest software license shall be provided at substantial completion of the project for Polk County review.

R. Radio:

a. The radio shall be the latest model from Motorola that is designed for this purpose. No RTU or radio shall be integrated into a PCU SCADA system without written PCU authorization.

S. Antenna:

a. The antenna subsystem shall be supplied and installed by the RTU supplier.

At a minimum, the following requirements must be met:

i. Greater than 16 decibels receive signal separation between transmitting tower sites as measured by monitoring the control channel signal level;

ii. Minimum –85 dBm receive signal level at the MOSCAD radio;

iii. Maximum –53 dBm signal at the trunking site antenna;

iv. The antenna must be rated for the corrosive environment;

v. Antenna ground planes shall be installed where required;

vi. The antenna shall be three decibel gain 800 MHz trunked low profile antenna, as specified within the appropriate "Approved Materials Checklist" unless more power is required to meet above requirements;

vii. Antenna cable shall be Times LMR 400 cable with Type N connectors, coaxial Polyphase surge suppression and Type N bulkhead cable connector. The coaxial surge suppressor shall be securely mounted and connected to ground with 12 AWG minimum copper. Antenna connections made outdoors must be weatherproofed, sealed and taped.

T. Uninterruptible Power Supply/Battery Backup;

a. The RTU shall be supplied with an integrated power supply/uninterruptible power supply (UPS) with battery backup capability for operating the RTU for a minimum of six hours (five amp/hour minimum) in the event of a commercial power failure.

b. The power supply shall keep batteries at a float charge. The RTU shall contain a low battery cutout circuit and the batteries shall not be damaged by deep discharges.

c. The power supply shall supply power to the processor/PLC and I/O and/or function modules.

d. The power supply shall also provide a 24 VDC voltage source for field devices.

U. Instrument Surge Protection;

a. All analog instrumentation shall have surge suppression mounted in the RTU.

V. Shop Testing;

1. After fabrication in the control panel manufacturer's plant, an operational test shall be performed to check out the entire panel before delivery.
2. The RTU panel shall have all software loaded and all I/O shall be proven to the RTU with inputs simulated. A signed, dated detailed test report shall be shipped with the unit.

W. CONTRACTOR to perform testing on integrated systems at key stages in the process. At a minimum, Operational Readiness Testing (ORT) and Performance Acceptance Testing (PAT) shall be performed. Factory Testing and Staging Testing may be added at COUNTY or ENGINEER discretion. Minimum testing requirements shall be as follows:

a. Operational Readiness Test (ORT): Prior to startup test period and PAT, inspect, test, and document that entire Process Instrumentation and Control System (PICS) is ready for operation.

i. Loop/Component Inspections and Tests:
   1. Check PICS for proper installation, calibration, and adjustment on a loop-by-loop and component-by-component basis.
   2. Provide space on forms for signoff by PICS subcontractor.
   3. Use loop status report to organize and track inspection, adjustment, and calibration of each loop and include the following:
      a. Project name.
      b. Loop number.
      c. Tag number for each component.
      d. Checkoffs/Signoffs for Each Component:
         i. Tag/identification.
         ii. Installation.
         iii. Termination wiring.
         iv. Calibration/adjustment
      e. Checkoffs/Signoffs for the Loop
         i. Field Device Signals Transmitted to the PLCs are Operational: Received/sent, processed, adjusted.
   4. Component calibration sheet for each active field component (except simple hand switches, lights, gauges, and similar items) include the following:
      a. Project name.
      b. Loop number.
      c. Component tag number or PLC register address.
      d. Component code number for field device elements.
      e. Manufacturer for field device elements.
      f. Model number/serial number for field device elements.
      g. Summary of Functional Requirements, for Example:

i. Indicators and recorders, scale and chart ranges.
ii. Transmitters/converters, input and output ranges.
iii. Computing elements' function.
iv. Controllers, action(direct/reverse) and control modes (P&ID).
v. Switching elements, unit range, differential (fixed/adjustable), reset (auto/manual).

h. Calibrations, for Example, but not Limited to:
i. Analog Devices: Actual inputs and outputs at 0,10, 50, and 100 percent of span, rising and falling.
ii. Other Field Devices: Actual trip points and reset points.
iii. Controllers: Mode settings (P&ID).
iv. Actual inputs or outputs of 0, 10, 50, and 100 percent of span, rising and falling.
v. Space for comments.

i. Maintain loop status reports, valve adjustment sheets, and component calibration sheets at site and make them available to Engineer at all times.
j. Test and calibrate all fiber optic data links. Document that the dB links are within specified limits and the data communication is error free at specified baud rates.
k. These inspections and tests will be spot checked by Engineer.
l. Engineer reviews loop status sheets and component calibration sheets and spot-check their entries periodically, and upon completion of ORT. Correct deficiencies found.

b. Performance Acceptance Tests (PAT):
i. Once ORT has been completed and facility has been started up, perform a witnessed PAT on complete PICS to demonstrate that it is operating as required by the Contract Documents. Demonstrate each required function on a paragraph-by-paragraph, loop-by-loop, and site-by-site basis.

ii. Loop-specific and non-loop-specific tests same as required for Factory Testing except that entire installed PICS tested using actual process variables and all functions demonstrated.

iii. Perform local and manual tests for each loop before proceeding to remote and automatic modes.

iv. Where possible, verify test results using visual confirmation of process equipment and actual process variable. Unless otherwise directed, exercise and observe devices supplied by others, as needed to verify correct signals

to and from such devices and to confirm overall system functionality. Test verification by means of disconnecting wires or measuring signal levels is acceptable only where direct operation of plant equipment is not possible.

v. Provide updated versions of the following documentation available to Engineer at site, both before and during tests.
   1. One copy of submittals applicable to the equipment to be tested.
   2. One copy of the Drawings and Specifications together with addenda and applicable change orders.
   3. Make one copy of all O&M manuals.

vi. Specialty Equipment: For certain components or systems provided under this section but not manufactured by PICS Subcontractor, provide services of qualified manufacturer's representative during installation, startup, demonstration testing, and County training. Refer to Article Onsite Services in PICS Subsystems for specific requirements.

vii. Instruments shall be tested at 0 percent, 25 percent, 50 percent, 75 percent, and 100 percent of scale through wired and wireless communications to the PLC and to the HMI insofar as is practical and not to put effluent quality at risk.

2.02 INSTRUMENTATION

A. The CONTRACTOR shall purchase and install instrumentation equipment as standardized below. The equipment aligns with what Polk County Utilities currently utilizes. Exact models shall be determined during design:
   1. Liquid Level
      i. Pressure – Rosemount 3051
      ii. Ultrasonic – Endress Hauser FMU95 or Siemens SITRAN LU
      iii. Approved Equal
   2. Pressure Indicating and Differential Transmitters
      i. Rosemount 3051
      ii. Approved Equal
   3. Pressure Switches
      i. Ashcroft B-Series
      ii. Approved Equal
   4. Pressure Gauges
      i. Ashcroft
      ii. Approved Equal
   5. Flow Meters
      i. Electromagnetic – Foxboro
   6. Chemical Metering Pumps
      i. Prominent
   7. Chlorine Analyzers
      i. Prominent

8. Transmitters
    i. Hach SC200 or SC1000 depending on number of elements
    ii. Approved Equal
9. pH Element
    i. Prominent
10. Motor Operated Valves
    i. Limitorque or Auma Actuators, Valve per Polk County Standards
    ii. Approved Equal
11. Total Suspended Solids (High and Low) and NTU
    i. Hach Solitax
    ii. Approved Equal

2.03 STANDARD SCREENS

A. The following pages are intended to be standard screens as a basis for creating reclaimed water remote site SCADA pages. The screens shall be used as a basis by both designers and integrators.

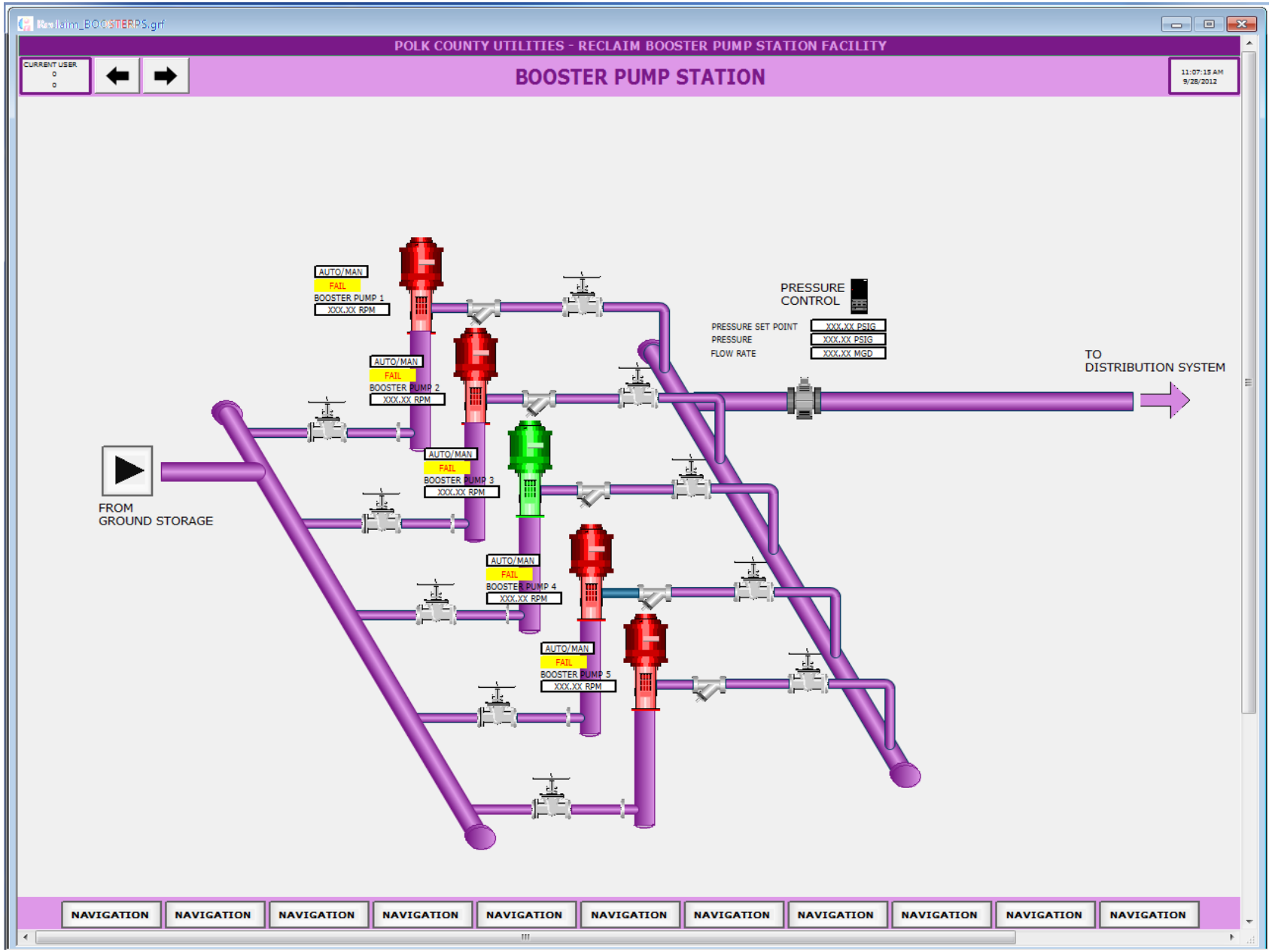
POLK COUNTY UTILITIES - RECLAIM BOOSTER PUMP STATION FACILITY
BOOSTER PUMP STATION
CURRENT USER
11:07:15 AM
9/28/2012
AUTO/MAN
FAIL
BOOSTER PUMP 1
XXX.XX RPM
BOOSTER PUMP 2
BOOSTER PUMP 3
BOOSTER PUMP 4
BOOSTER PUMP 5
PRESSURE CONTROL
PRESSURE SET POINT
PRESSURE
FLOW RATE
XXX.XX PSIG
XXX.XX MGD
TO DISTRIBUTION SYSTEM
FROM GROUND STORAGE
NAVIGATION

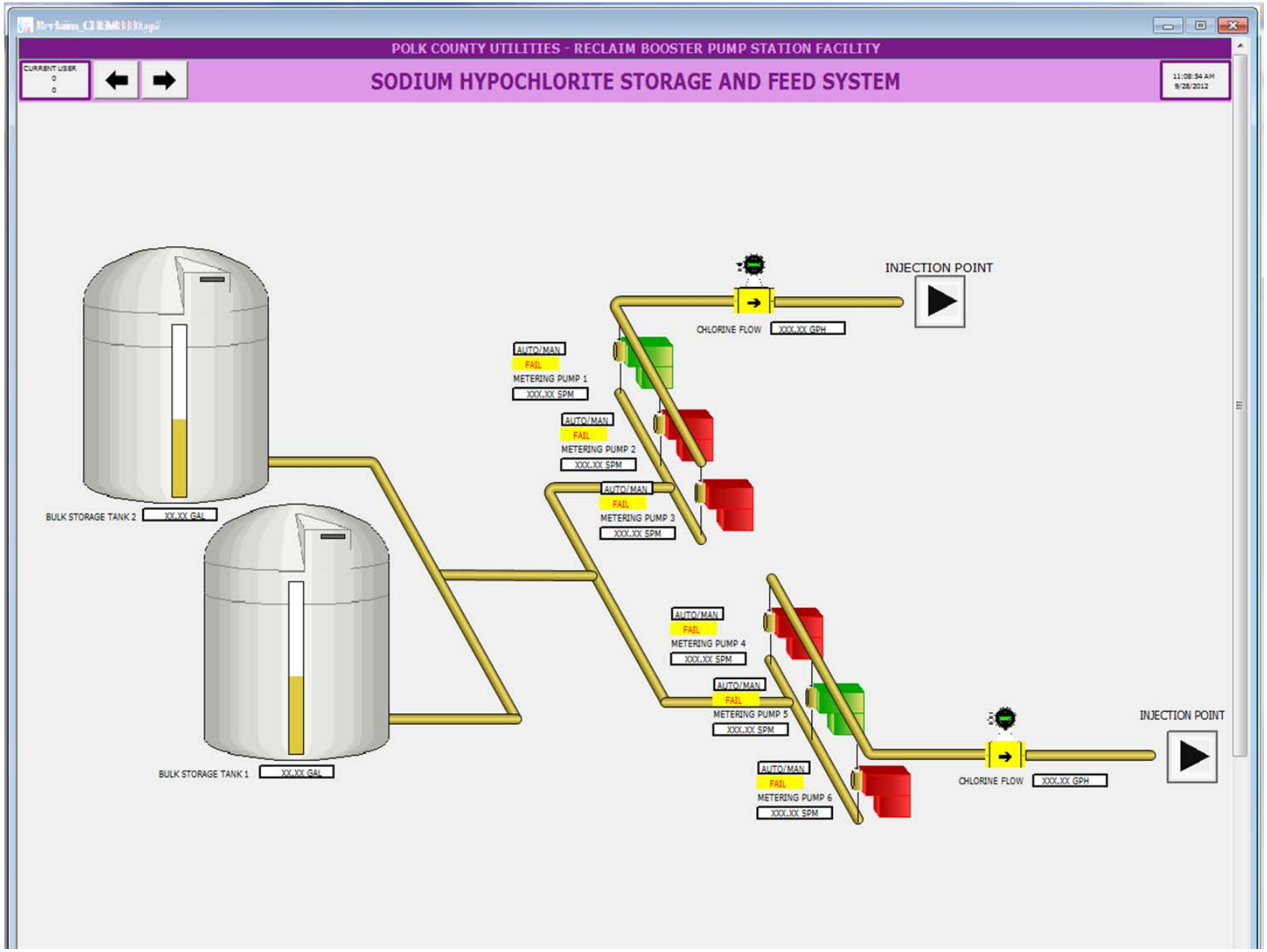
POLK COUNTY UTILITIES - RECLAIM BOOSTER PUMP STATION FACILITY
CURRENT USER
0
0
SODIUM HYPOCHLORITE STORAGE AND FEED SYSTEM
11:08:54 AM
9/28/2012
INJECTION POINT
CHLORINE FLOW
XXX.XX GPH
AUTO/MAN
FAIL
METERING PUMP 1
XXX.XX SPM
AUTO/MAN
FAIL
METERING PUMP 2
XXX.XX SPM
AUTO/MAN
FAIL
METERING PUMP 3
XXX.XX SPM
BULK STORAGE TANK 2
XX.XX GAL
BULK STORAGE TANK 1
XX.XX GAL
AUTO/MAN
FAIL
METERING PUMP 4
XXX.XX SPM
AUTO/MAN
FAIL
METERING PUMP 5
XXX.XX SPM
AUTO/MAN
FAIL
METERING PUMP 6
XXX.XX SPM
INJECTION POINT
CHLORINE FLOW
XXX.XX GPH

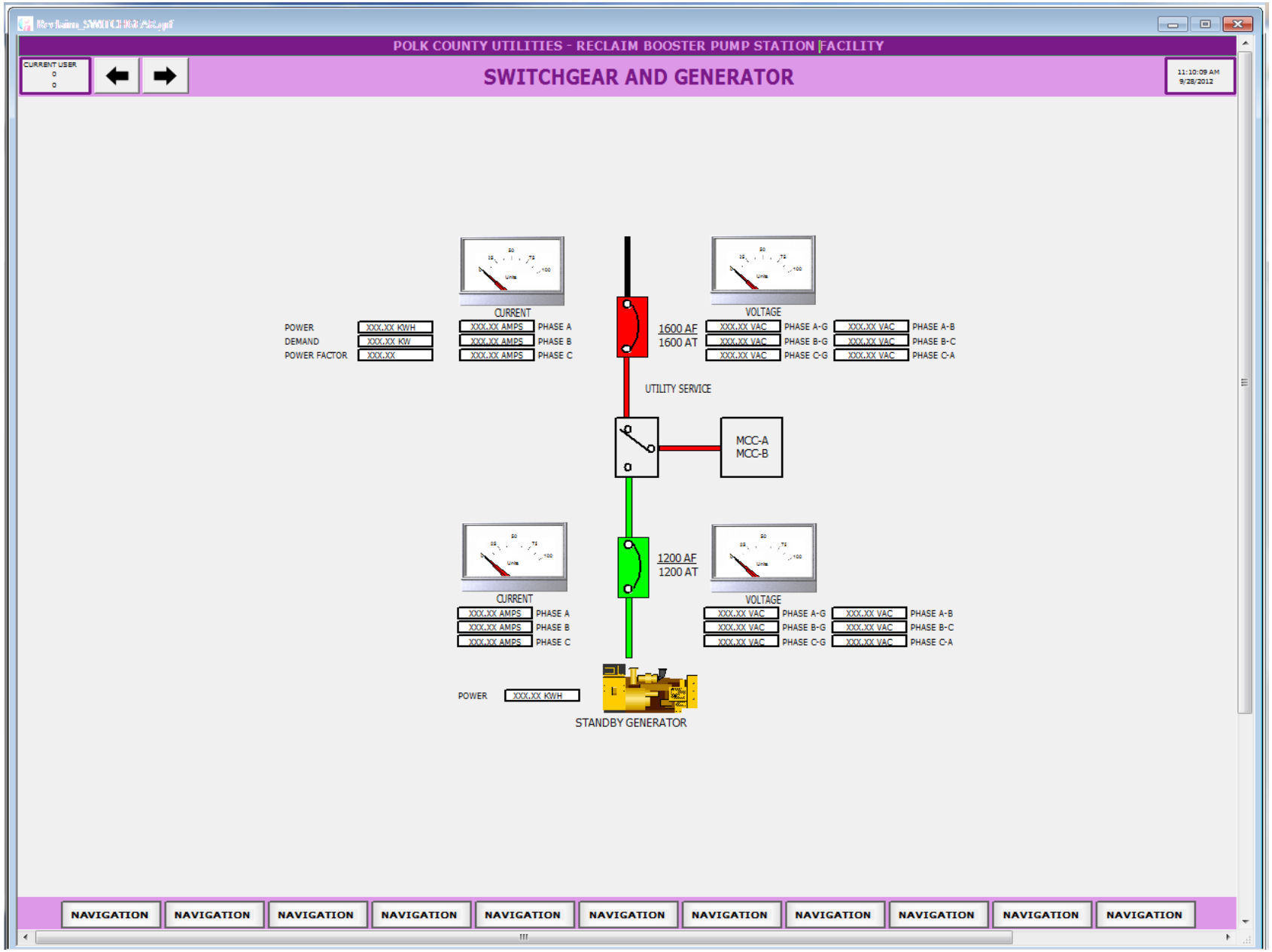
POLK COUNTY UTILITIES - RECLAIM BOOSTER PUMP STATION FACILITY
CURRENT USER
0
0
SWITCHGEAR AND GENERATOR
11:10:09 AM
9/28/2012
CURRENT
VOLTAGE
POWER
XXX.XX KWH
DEMAND
XXX.XX KW
POWER FACTOR
XXX.XX
XXX.XX AMPS
PHASE A
XXX.XX AMPS
PHASE B
XXX.XX AMPS
PHASE C
1600 AF
1600 AT
XXX.XX VAC
PHASE A-G
XXX.XX VAC
PHASE A-B
XXX.XX VAC
PHASE B-G
XXX.XX VAC
PHASE B-C
XXX.XX VAC
PHASE C-G
XXX.XX VAC
PHASE C-A
UTILITY SERVICE
MCC-A
MCC-B
1200 AF
1200 AT
CURRENT
VOLTAGE
XXX.XX AMPS
PHASE A
XXX.XX AMPS
PHASE B
XXX.XX AMPS
PHASE C
XXX.XX VAC
PHASE A-G
XXX.XX VAC
PHASE A-B
XXX.XX VAC
PHASE B-G
XXX.XX VAC
PHASE B-C
XXX.XX VAC
PHASE C-G
XXX.XX VAC
PHASE C-A
POWER
XXX.XX KWH
STANDBY GENERATOR
NAVIGATION
NAVIGATION
NAVIGATION
NAVIGATION
NAVIGATION
NAVIGATION
NAVIGATION
NAVIGATION
NAVIGATION
NAVIGATION
NAVIGATION

CHAPTER 6 **RECLAIMED WATER** Rev December 2012

Section 650 **STANDARD DRAWINGS** December 2010

RW-01 Reclaimed Water Signage (“Do Not Drink Water”)
RW-02 Reclaimed Water Signage (“Do Not Drink / Do Not Swim”)
RW-03 Reclaimed Water Master Meter Assembly

CHAPTER 6 RECLAIMED WATER

Section 650-A Testing and Inspection for Acceptance

December 2010

PART 1 - GENERAL

1.01 SCOPE OF WORK

A. These specifications cover the testing and inspection for the acceptance of reclaimed water systems.

B. Hydrostatic tests shall be conducted for pressure pipes, joints, fittings and valves for allowable limits of pressure and leakage. Air testing of pressure pipes will not be permitted under any circumstance.

C. Requests for testing and acceptance of reclaimed water systems shall follow the procedure in listed in the Section entitled “Field Testing and Inspection Procedures”.

D. The purpose of swabbing a new pipeline is to conserve water while thoroughly cleaning the pipeline of all foreign material, sand, grit, gravel, construction debris and other items not found in a properly cleaned system. Prior to pressure testing of a new pipeline, swabbing shall be utilized as specified on the construction plans for each project.

PART 2 - PRODUCTS (NOT USED)

PART 3 - EXECUTION

3.01 TESTS

A. Pipe cleaning shall be accomplished through a full diameter preliminary flush followed by swabbing (also known as pigging).

1. The preliminary flush shall have a minimum velocity of 0.5 feet per second velocity throughout the main’s full diameter in accordance with AWWA C651.

2. Swabbing

   a. All mains shall be hydraulically cleaned with a polypropylene swabbing device to remove dirt, sand, and debris from main.

   b. If swabbing access and egress points are not provided in the design drawings, it will be the responsibility of the CONTRACTOR to provide and remove temporary access and egress points for the cleaning, as required.

   c. Passage of cleaning poly swabs through the system shall be constantly monitored, controlled, and all poly swabs entered into the system shall be individually marked and identified so that the exiting of the poly swabs from the system can be confirmed.

   d. Cleaning of the system shall be done in conjunction with the initial filling of the system for its hydrostatic test.

   e. The line to be cleaned shall only be connected to the existing distribution system at a single connection point.

   f. The CONTRACTOR shall locate and open all new in-line valves beyond the point of connection on the pipeline to be cleaned during the swabbing operation.

g. At the receiver or exit point for the poly swab, the CONTRACTOR is responsible for creating a safe environment for collection of debris, water, and the swab. The CONTRACTOR shall provide for the protection of surrounding personnel and property and the safe retrieval of the swab.

h. Only PCU personnel shall operate the supply valve from the existing distribution system. Cleaning and flushing shall be accomplished by propelling the swab down the pipeline to the exit point with reclaimed water. Flushing shall continue until the water is completely clear and swab is retrieved.

i. Re-apply a series of individual swabs in varying diameters and/or densities as required, to attain proper cleanliness of pipeline.

ii. Swabbing speed shall range between two and five feet per second.

iii. After the swabbing process, pressure testing and disinfection of the pipe shall be completed in accordance with this MANUAL.

B. Hydrostatic Pressure Testing of Ductile Iron and PVC Pressure Pipe:

Hydrostatic pressure tests shall consist of a pressure test and leakage test for non-butt welded jointed pipes. Hydrostatic tests shall be conducted on all newly laid pressure pipes, joints, and valves including all service lines to the curb stops and fire hydrants assemblies. Testing shall be performed from in-line valve to in-line valve with a depressurized section behind each valve, whenever possible.

1. All pipe sections to be pressure tested shall be subjected to a minimum hydrostatic pressure of 150 psi. The duration of each pressure test shall be for a period of two hours. If during the test, the integrity of the tested line is in question, PCU may require a six-hour pressure test. The basic provisions of AWWA C600 shall be applicable.

2. All testing and the quantity of acceptable leakage shall be documented and certified using the appropriate Pressure Test Form.

3. Water supply from the existing distribution system shall be provided through a jumper connection consisting of fittings, a reduced pressure zone cross connection control assembly, and installed as shown in the STANDARD DRAWINGS.

4. Procedure for Pressure Test:

Pipe to be tested shall be slowly filled with water and the specified test pressure shall be applied by means of a pump connected to the pipe in a satisfactory manner. Provisions shall be made to expel air entrapped in the pipe before applying the specified test pressure. To accomplish this, taps shall be made, and appropriate valves installed to ensure bleeding of all air from the main. If defective pipes, fittings, valves, or hydrants are discovered in consequence of this pressure test, all such items shall be removed and replace by the CONTRACTOR with sound material and the test shall be repeated until satisfactory results are obtained. Provisions of AWWA C600 and C651, where applicable, shall apply.

5. Procedure for Leakage Test:

a. After completion of the pressure test, a leakage test shall be conducted to determine the quantity of water lost by leakage under the specified test pressure. Applicable provisions of AWWA C600 shall apply.

b. Allowable leakage in gallons per hour for pipeline shall not be greater than that determined by the formula:

$$L = \frac{ND(P)^{1/2}}{7{,}400}$$

Note:
L - Allowable leakage in gallons per hour.
N - Number of joints in the tested line.
D - Nominal diameter of the pipe in inches.
P - Average test pressure during leakage test in pounds per square inch gauge.

6. Leakage is defined as the quantity of water to be supplied in the newly laid pipe or any valved off section under test, which is necessary to maintain the specified leakage test pressure after the pipe has been filled with water and the air expelled. Should any test of pipe laid disclose leakage greater than that allowed, the CONTRACTOR shall locate and replace or repair the defective joints, pipe or valve until the leakage from subsequent testing is within the specified allowance.

C. Hydrostatic Pressure Testing of HDPE and Fusible PVC Pressure Pipe:

1. After installation, the butt welded jointed pipe shall be tested in accordance with this MANUAL with the following modifications:

a. Test Duration: The total test time including initial pressurization, initial expansion, and time at test pressure, shall not exceed five hours. If the test is not completed due to leakage, equipment failure, etc., the test section shall be depressurized and allowed to "relax" for a minimum of eight hours before it is brought back up to test pressure.

b. Prior to Hydrostatic Pressure Testing Procedure:

i. Hydraulically clean the main to be tested with a polypropylene swab (pig) to remove dirt, sand, and debris from the main prior to hydrostatic testing.

ii. Insure that main to be tested is restrained against horizontal and vertical movement. Exposing joints only is allowed.

c. Hydrostatic Pressure Testing Procedure:

i. Fill main slowly with water to remove air.

ii. Pressurize up to 1.5 times the Pressure Class of the pipe used at the lowest point of the main being tested.

iii. Maintain for 4 hours while adding water as needed in non-monitored amounts as pipe will expand while until pressure.

iv. Reduce pressure by 10 psi and monitor for 1 hour.

v. Main passes if there are no leaks within 5 percent of the remaining pressure after reduction.

D. The CONTRACTOR shall furnish all necessary equipment and material, make all taps and furnish all closure pieces in the pipe as required. Equipment to be furnished by the CONTRACTOR shall include graduated containers, pressure gauges, hydraulic forces pumps, and suitable hoses and piping. The PCU representative shall monitor a satisfactory test.

E. The CONTRACTOR may conduct preliminary hydrostatic tests after the trench has been partially backfilled with the joints left exposed for inspection for informational purposes only. The hydrostatic tests for acceptance shall only be conducted after the trenches have been completely backfilled and compacted as specified. Where any section of pipe is provided with concrete thrust collar, pressure test will not be made until at least five days have elapsed after the thrust collar is installed.

F. The distribution system piping is to remain isolated and out of service until regulatory clearance is issued for the potable water system and the potable system is subsequently activated.

PART 4 - ACCEPTANCE

4.01 LOCATE WIRE CHECK

A. The locating wire will be inspected and tested for continuous continuity along the entire length of the main and correct material as specified in the appropriate "Approved Materials Checklist".

B. Valve locations will be inspected for the proper installation of the locating wire in accordance with the STANDARD DRAWINGS and tested for continuity between the main and the valve.

4.02 VALVES

A. Valves will be operated to verify a smooth and correct operation, plus the correct direction of opening. PCU shall confirm the location in accordance with the RECORD DRAWINGS and installed in accordance with the STANDARD DRAWINGS.

4.03 VALVE BOXES

A. Valve boxes will be inspected to ensure they are clear of debris, centered over the operating nut, and installed with a collar as shown in the STANDARD DRAWINGS. The depth of the operating nut will be measured to finished grade to confirm that a riser is installed or not required. Valve boxes shall meet the material standards listed in the appropriate "Approved Materials Checklist".

4.04 SERVICE LINES

A. Service lines shall be properly identified, free from conflicts with any structure, installed as shown in the STANDARD DRAWINGS, and the number location and size is as shown on the RECORD DRAWINGS to serve all intended properties. The materials shall be as listed in the appropriate "Approved Materials Checklist".

4.05 AUTOMATIC AIR RELEASE VALVE ASSEMBLIES

A. Valve assemblies shall be free from any conflicts with any structures, installed in accordance with the STANDARD DRAWINGS, and located as shown on the RECORD DRAWINGS tested to ensure correct operation and confirm materials as listed in the appropriate "Approved Materials Checklist".

CHAPTER 6 RECLAIMED WATER

Section 650-B Approved Materials Checklist December 2010

PLEASE TYPE OR PRINT CLEARLY IN BLACK INK

Project Name: _____

PCU Project File Number: _____

Contractor's Name: _____

Contractor's Address: _____

Contractor's Signature: _____

Engineer's Name: _____

Engineer's Address: _____

PCU Reviewer: _____ Date: _____

Approved: ____ Denied/Resubmit: ____

Comments:

_____
_____
_____
_____
_____
_____

With the submission of this document, the CONTRACTOR understands that the use of the following selected items, as individually indicated by the use of an "X", is mandatory.

Substitutions using other items contained within this Checklist shall be initiated by the CONTRACTOR submitting a revised Checklist to PCU for its review and approval at least 10 calendar days in advance of need.

It is also understood by the CONTRACTOR that PCU shall reject materials and products not in accordance with this document and the MANUAL. Any material or product not contained within this Checklist shall be approved in advance by the Utilities Code Committee in accordance with the provisions of the Utilities Code.

Shop drawings shall be required for all structures and similar items not contained within this checklist, such as manholes, wet wells, and other castings.

CHAPTER 6 RECLAIMED WATER

Section 650-B Approved Materials Checklist December 2010

Four (4) sets of the CONTRACTOR's and ENGINEER's executed APPROVED MATERIALS CHECKLIST and any necessary shop drawings shall be submitted to PCU for its use and approval, plus the number of sets needed for the CONTRACTOR use.

Ordering materials and products without specific written approval from PCU of the submitted checklist and shop drawings is NOT recommended and is done at the CONTRACTOR's sole expense and responsibility.

NOTE: The latest changes approved by the Utilities Code Committee are indicated by "underlining" and deleted items by "~~strikethroughs~~".

Reclaimed Water Category 1 of 9: VALVES AND ACCESSORIES			
ITEM TO BE USED	**Manufacturer**	**Part Number**	**Comments**
Automatic Combination Air / Vacuum Release Valves:			
	ARI	D-040-PT02, ,	Combination
	ARI	D-21-PT01 (1"), D-021-PT02 (2")	Combination
	ARI	S-21-PT01 (1"), S-021-PT02 (2")	Air Release Only
	Val-Matic	VM-38	Air Release Only – Plant, Facility Use Only
	Val-Matic	VM-45	Air Release Only – Plant, Facility Use Only
	Val-Matic	VM-200C	Combination – Plant, Facility Use Only
Air / Vacuum Release Valve Enclosure (Horizontal Venting and Pantone 522-C Purple):			
	Water Plus	131632	
	Channell	BPH 1730	
	Hydro-Guard	Safety-Guard 15100 Low Profile or 02100	
Air / Vacuum Release Valve Vault Frame And Cover:			
	US Foundry	USF-679-BK-M	
	CertainTeed	Pamrex 36"	Alternative – Not to be used in paved roadways.

Butterfly Valves 42-inch And Larger: (8 mil Epoxy Coated And Lined (AWWA)):			
	M & H	4500	
	Mueller/Pratt	Linseal III / BV Ground Hog	
Butterfly Valves 16-inch And Larger: (Rubber Seated (AWWA):			
	Val-Matic	2000	To be utilized as directed by PCU.
Gate Valves 16-inch Through 48-inch (Resilient Seated Only With Side Actuators):			
	American Flow Control	Series 2500	
	Mueller	Series A-2361	
	M & H	Series 4067	
Gate Valves 12-inch And Smaller (Resilient Seated Only):			
	American Flow Control	Series 2500	
	M & H	Series 4067	
	Mueller	Series A-2360	
	Clow	Series F-6100	
Tapping Valves (Resilient Seated Only):			
	American Flow Control	Series 2500	
	M & H	Series 4751	
	Mueller	Series T-2360 & T-2361	
	Clow	Series F-6114	
Insertion Valves - MJ/Ductile Iron RWGV (In Place of Line Stop/Tapping Sleeve)			
	Team Industrial Products	InsertValve	Available 4” through 12”
Test Station Box For Buried Valves:			
	Bingham/Taylor	P200NFG2T	
Valve Boxes With Lids (5¼ -Inch, ASTM A48 30B Cast or Ductile Iron, With “RECLAIMED” cast into the lid top):			
	Bingham / Taylor Foundry	4905-X, 4905, 4904L	
	Tyler	Series 6850	
	American Flow Control*	Trench Adapter Models 1 through 9	* For mains that have valve nuts that are 6’ or deeper.
	Sigma	VB261, VB262, VB264, VB4650W	
	Mueller	MVB	Use w/ AJBV-4” Locking Bolt
	Star		Heavy Duty Screw or Slip Type

Reclaimed Water Category 2 of 9: SERVICE MATERIALS			
ITEM TO BE USED	**Manufacturer**	**Part Number**	**Comments**
Angle Stops Ball Type (1-inch And 2-inch CTS OD Tubing By 5/8-inch By ¾-inch And 2-inch Meter):			
	Ford	BA43-242W, BFA43-777W	
	Mueller	P24258, P24276	
	McDonald	4642B-22, 4602B-22	
Angle Stops Ball Type (3/4-inch FIP By 5/8-inch By 3/4-inch Meter):			
	Ford	BA13-232W	
	Mueller	B24265R	
	McDonald	4604B	
Brass Service Saddles (Service Saddles Can Be Hinged Or Bolt Controlled OD Saddles To Be Used On C-900 And IPS OD PVC Pipe):			
	Ford	Series S-70, S-90	
	Mueller	Series S-13000 / H-13000	
	McDonald	3801, 3891	
Corporation Stops Ball Type (1-inch and 2-inch With AWWA Iron Pipe Threads Only/Pack Joint Outlet For CTS):			
	Ford	FB1000	
	Mueller	P25008	
	McDonald	4701B-22	
Curb Stops Straight Valves (Curb Stop To Be Ball Type, Reduced Port FIP By FIP 3/4-inch By 3/4-inch):			
	Ford	B11-233W	
	Mueller	B-20200-R	
	McDonald	6101W	
Curb Stops Straight Valves (Ball Type Compression By Meter, 1-inch And 2-inch CTS OD Tubing By 5/8-inch By ¾-inch Meter):			
	Ford	B43-342W, BF43-777W	
	Mueller	P24350, B24337, B24335	
	McDonald	6101MW-22	
Curb Stops Straight Valves (Ball Type Compression By Compression):			
	Ford	BA44-444W	
	Mueller	P25146	
	McDonald	6101MW-22	
Polyethylene Tubing (Pantone 522-C Purple With UV Protection [SDR-9] 1-inch And 2-inch Only):			

	Endot	PE-4710 EndoPure	
	Endot	PE-4710 EndoTrace	Alternative Pipe and Locating Wire Combo
	Charter Plastics	PE-4710	
	ARNCO	PE-4710 Perma-Guard	
	ARNCO	PE-4710 Perma-Find	Alternative Pipe and Locating Wire Combo
	ADS	CTS PE4710	Service Tubing
Service Saddles (Epoxy Or Nylon Coated Stainless Steel 18-8-Type 304 Straps, Iron Pipe Threads – 2-inch To Be Iron Pipe Threads Controlled OD Saddles To Be Used On C-900 And IPS OD PVC Pipe, Double Straps To Be 2-inch Minimum Width Each.):			
	Ford	Series FC202	
	JCM	Series 406	
	Mueller	DR2S, DR2SOD	
	McDonald	3835, 3855	
	Romac	202N-H	For Use With HDPE Pipe
Y Branch (1-inch By 2-inch):			
	Ford	U-48-43	
	Mueller	P15363	
	McDonald	08U2M	
Y Branch Assemblies With Angle Ball Valves (1-inch By 2-inch):			
	Ford	UVB43-42W	
	Mueller	P15363-05	
	McDonald	09U2BW	
Meter Boxes w/ Cast Iron Lids (Pantone 522-C Purple, HDPE, with English and Spanish Identification and Warning Wording plus International "Do Not Drink" Symbol on Top):			
	Carson PolyPlastic	10152026 (Box) 10151019 (Combo)	10154008 (Lid)
	DFW Alliance	DFW1200D5-12-Body(Box) DFW 1200D5-12-5C (Combo Unit)	DFW1200-5C-LID (Lid)

CHAPTER 6 RECLAIMED WATER

Section 650-B Approved Materials Checklist December 2010

Reclaimed Water Category 3 of 9: PIPE MATERIAL			
ITEM TO BE USED	**Manufacturer**	**Part Number**	**Comments**
Casing Spacers (All Sizes) Stainless Steel With Vinyl Runners:			
	Cascade	Series CCS / CCPS / AZ	
	PSI	Series S-G-2	
	PSI-Ranger	Ranger II	
	RACI	S/T, F/G, P/Q, M/N, E/H	
	CCI	CCS8, CCS12	
	Advance Systems		
Ductile Iron Pipe Cement Lined (4-inch To 12-inch = PC 350, 16-inch To 20-inch = PC 250, 24-inch = PC 200, 30-inch To 64-inch = PC 150) (DI Flanges As Applicable, AWWA C153):			
	American		
	Clow		
	Griffin		
	McWane		
	US Pipe		
Paint: Aerial Pipe, Fittings, And Valves (Field and Factory Primer):			
	Color Wheel	635 Primer Red	
	Glidden	Alkyd Metal Primer	
	Porter/International	286 U-Primer	
	Tnemec	37H-77 Chem-Primer	
	Wasser	Ferro Clad Primer	
Paint: Finish (Exterior):			
	Color Wheel	600 Alkyd Enamel	
	Glidden	Alkyd Industrial Enamel	
	Porter/International	2749 Alkyd Gloss	
	Tnemec	Tnemec - Gloss 2H	
PVC (Pantone 522-C Purple) 4-inch Through 12-inch Pipe (AWWA C-900, DR18) and 16-inch and larger pipe (AWWA C-905 or C-909, DR 25):			
	Bristolpipe 4” to 12”		
	Certainteed 4” to 12”	Certa-Lok	
	Diamond Plastic		
	Ipex		
	JM-Eagle		
	National Pipe		

	NAPCO		North American Pipe Company
	Upinor ETI 9		
	Underground Solutions	Fusible PVC	For Horizontal Directional Drill Use Only
HDPE Pipe DR11 (Pantone 522-C Purple Striped):			
	Chevron/Phillips	Performance Pipe / ISCO Pipe	
	CSR	Polypipe/Charter Plastics	
	ARNCO		
	JM-Eagle		
	National Pipe		
Reclaimed Water Main Identification Tape (Pantone 522-C Purple, 6-Inches Wide, 2-Inches High Black Lettering, Adhesive Backed):			
Buried Reclaimed Water Main Warning Tape (Pantone 522-C Purple, 3-inches Wide, 1-Inch High Black Lettering, Non-Adhesive Backed):			
Reclaimed Water Locating Wire (Single Strand 14-Gauge Solid Copper Wire with Pantone 522-C Purple Colored Insulated Covering):			
	Copperhead	Locating Tracer Wire	Alternative

Locating Marker Systems (Reclaimed Water) (Pantone 522-C Purple In Color):			
	3M	Scotch Mark EMSII Electronic Marker Purple Locator #1265	
	3M	Scotch Marker Electronic Ball Marker #1404	
Curb and Pavement Markers (Pantone 522-C Purple in Color, Imprinted With The Words "POLK COUNTY UTILITIES" And "CALL 811 BEFORE YOU DIG" With "RECLAIMED WATER SERVICE" or "RECLAIMED WATER VALVE" As Applicable):			
	Rhino	ATAGNCT-C (Custom Imprinting)	New Construction
	Rhino	ATAGRFT-C (Custom Imprinting)	Retrofit to Existing Improvements
	DAS Manufacturing	Reflective Duracast Style (Custom Imprinting)	New Construction or Retrofit

Reclaimed Water Category 4 of 9: PIPE FITTINGS			
ITEM TO BE USED	**Manufacturer**	**Part Number**	**Comments**
Expansion Joints:			
	EBAA Iron		
	Metraflex		
Fittings C153 SSB / C110 Flange (Cement Mortar Lined and Asphaltic Coated In Accordance With AWWA C104) (Outside Surfaces Shall Be Prime Coated Only If Located Aboveground And Painted):			
	American		
	Union/Tyler		
	US Pipe		
	Sigma		
	Star Pipe		
Restrained Joints - Ductile Iron Pipe:			
	American	Fast Grip Gasket Flex Ring Field Flex Ring Lok Ring	
	EBAA Iron Inc.	Mega-lug Series 1100 Series 1700 Bell Restrainer Series RS-3800 Restrainer - sleeve included	
	Sigma	One LOK SLD	
	Sigma	LOK Series PVP and PVPF	
	Star	Stargrip Series 3000, 3000OS, 3100P & 3100S Flange Adapter Series 200 & 400 Retainer Gland Series 600 Adapter Flange Series 3200 Series 4000 & 4100P Series 3200 & 4200 Series 1000, 1100, & 1200 Flange Series 3200 & 4200 Adapter Flange Series 200 & 400 Star Flex Series 5000, 5100, & 5200	

	Tyler/Union	Tuf Grip TLD Series 1000, 1000S Tuf Grip Dual Wedge Restraint Series 1500	For DI Pipe Use For PVC, DIP, HDPE pipe use
Restrained Joints - PVC Pipe:			
	EBAA Iron Inc.	Mega-lug Series 2000PV Series 1500 & 1600 Bell Restrainer (4-inch to 12-inch) Series RS-3800 Restrainer – sleeve included	
	JCM	620 Sur-Grip Bell Joint 621 Sur-Grip Bell Joint	
	Uni-Flange/Ford	1350 Bell Restrainer 1360 Bell Restrainer 1390 Bell Restrainer 900 Adapter Flange 1300 Fitting Restrainer 1500 Series	
	Sigma	One LOK SLC	
	Sigma	PV LOK Series PVP and PVPF	
	Star	Stargrip PVC Series 4000 PVC Harness Series 1100 & 1200	
	Tyler/Union	Tuf Grip TLP Series 2000, 2000S Tuf Grip Dual Wedge Restraint Series 1500 Bell Joint Restraints Series 3000: 32U, 33U, 34U, 35U	For PVC Pipe Use For PVC, DIP, HDPE pipe use For PVC Pipe Use
Tapping Sleeves (For All Taps On IPS OD PVC pipe, Including Size On Size (18-8 Type 304 Stainless Steel Body, Flange, And Bolts), Flange To Accept Standard Tapping Sleeves):			
	Ford	Series FTSS	
	JCM	Model 432	
	Mueller	Series H-304 S/S	
	CST	EX	
	Total Piping Solutions	Triple Tap	
Tapping Sleeves (Mechanical Joint For All Taps On Cast Iron, Ductile Iron, PVC-900 & AC Pipe, All Taps Including Size On Size):			
	American Flow Control	Series 2800	

	Mueller	Series H-615, H-616, H-619	
	JCM	Model 432	
	Total Piping Solutions	Triple Tap	
Tapping Sleeves (Fabricated Steel, Mechanical Joint, Fusion Bonded Epoxy Coated):			
	JCM	Series 414	

Reclaimed Water Category 5 of 9: VALVES AND ACCESSORIES (PLANTS AND REMOTE FACILITIES)			
ITEM TO BE USED	**Manufacturer**	**Part Number**	**Comments**
Automatic Combination Air / Vacuum Release Valves:			
	Val-Matic	VM-38	Air Release Only – Plant, Facility Use Only
	Val-Matic	VM-45	Air Release Only – Plant, Facility Use Only
	Val-Matic	VM-200C	Combination – Plant, Facility Use Only
Gate Valves, Butterfly Valves			
	DeZurik	BAW Series Butterfly	According to Application.
	DeZurik	Knife Gate Valve	According to Application
	Val-Matic	American BFV Butterfly	According to Application.
	Val-Matic	Ductile Iron RSGV	According to Application.
Valve Actuators			
	Beck	Model 11	Remote Indication or Position Display According to Application
	Auma	SA	Remote Indication or AumaMatic, According to Application
Hydraulically Operated Control Valves (Pressure Reducing/Sustaining Valves):			
	Cla-Val		Model or Series based on field application.
	OCV		Model or Series based on field application.
	Watts/Ames		Model or Series based on field application.

Reclaimed Water Category 6 of 9: PUMPS, CHEMICAL FEED SYSTEMS			
ITEM TO BE USED	**Manufacturer**	**Part Number**	**Comments**
Vertical Turbine			
	Goulds		
	Flowserve	VIC, VIT, SMVT, or DWT	based on application.
	Deming		(AKA: Process Systems, Inc.)
	National		
Centrifugal/Split Case/End Suction			
	Aurora		
	Flowserve		
	Goulds		
Chemical Pumps			
	Prominent		Appropriate series based on flow rate. Degassing heads for NaOCl.
Skid, Shelf Mounted Feed Systems			
	Blue Planet		Utilize "Polk County" junction box with hour meter/operating indication.
Chemical Tanks			
	Snyder	Captor/Dual Containment	HDLPE with NaOCl Resin
	Poly Processing Co.	Saf-T tank	XLPE with OR 1000 Inner Coating

Reclaimed Water Category 7 of 9: TANKS and GENERATORS			
ITEM TO BE USED	**Manufacturer**	**Part Number**	**Comments**
Pre-stressed Concrete Tanks			
	Crom		
	Pre-con		
Standby Power Generators			
	Kohler		3-Ph, 480V Diesel
	Caterpillar		3-Ph, 480V Diesel

	Cummings		3-Ph, 480V Diesel
Fuel Tanks (Stand-alone)			
	Convault		Pneumercator level/leak detection systems also required. LC 1000 w/ LS600 and LS610.
	Modern Welding		Pneumercator level/leak detection systems also required. LC 1000 w/ LS600 and LS610.
	Phoenix		Pneumercator level/leak detection systems also required. LC 1000 w/ LS600 and LS610.

Reclaimed Water Category 8 of 9: FLOW METERS			
ITEM TO BE USED	**Manufacturer**	**Part Number**	**Comments**
Flow Meters (Electro-magnetic)			
	Siemens	Sitrans FM Mag, 5000 series unless using bussed network	
	ABB	WaterMaster Series	
	Foxboro	9100A w/ IMT 25	

Reclaimed Water Category 9 of 9: ELECTRICAL			
ITEM TO BE USED	**Manufacturer**	**Part Number**	**Comments**
VFDs, Relays, Breakers			
	Schneider-Electric	Square D	
Security/Surveillance System			
	Axis		Camera/Equipment
	Bosch		Camera/Equipment
	Pelco		Camera/Equipment
	Exaqvision		Software

CHAPTER 6 **RECLAIMED WATER** Rev March 2012

Section 650-C **Reclaimed Water System Hydrostatic Pressure Test Report (PVC & DIP Pipe)** December 2010

Project:
PCU Project No.: _____

Procedures for conducting this test shall be in strict conformance with AWWA standard C600, latest revision. Maximum allowable leakage shall be: $L = \frac{ND(P)^{1/2}}{7{,}400}$

Where:
L = maximum allowable leakage, measured in gallons per hour
N = number of joints in the tested line (where a pipe joins a pipe or a pipe joins a fitting)
D = nominal diameter of pipe, measured in inches
P = test gauge pressure, measured in pounds per square inch (minimally 150 psi)

TESTING PARAMETERS & SYSTEM INFORMATION

Test Pressure (minimally 150 psi):		psi	
Beginning Test Pressure:	psi	Ending Test Pressure:	psi
Test Duration (minimally 2 hours):		hours	
Date of Test:			
Time at Start of Test:		Time at End of Test:	
Test Segment Location:			

Pipe Type	Diameter, inches	Length, feet	Number of Joints	Max. Leakage for 2 Hour Test, gallons
Total Maximum Allowable Leakage, gallons:				
Total Actual Leakage, gallons:				

CONTRACTOR & INSPECTOR PERSONNEL INFORMATION

	Contractor	Inspector
Signature:		
Printed Name:		
Company Name:		
Phone Number:		
Date:		

CHAPTER 6 RECLAIMED WATER

Section 650-D Reclaimed Water System Hydrostatic Pressure Test Report (HDPE Pipe) December 2010

Project: _____

PCU Project No.: _____

Procedures for conducting this test shall be in accordance with ASTM F 2164 and AWWA Standard C600, latest revision, where applicable. Pneumatic Testing is strictly prohibited.

Prior to Hydrostatic Pressure Testing Procedure:

1) Flush main with a minimum velocity of 3 fps to clear foreign materials.
2) Insure that main to be tested is restrained against horizontal and vertical movement. Exposing joints only is allowed.

Hydrostatic Pressure Testing Procedure:

1) Fill main slowly with water to remove air.
2) Pressurize up to 1.5 times the Pressure Class of the pipe used at the lowest point of the main being tested.
3) Maintain for 4 hours while adding water as needed in non-monitored amounts as pipe will expand while until pressure.
4) Reduce pressure by 10 psi and monitor for 1 hour.
5) Main passes if there are no leaks within 5 percent of the remaining pressure after reduction.

Disinfection is to be performed in accordance with AWWA Standard C651.

TESTING PARAMETERS & SYSTEM INFORMATION

Calculated Test Pressure:			psi
Beginning Test Pressure:	psi	Ending Test Pressure:	psi
Test Duration (minimally 5 hours):		Hours:	
Date of Test:			
Time at Start of Test:		Time at End of Test:	

Diameter, inches	Length, feet	Pressure Class, psi	Test Segment Location

CONTRACTOR & INSPECTOR PERSONNEL INFORMATION

	Contractor	Inspector
Signature:		
Printed Name:		
Company Name:		
Phone Number:		

CHAPTER 6 RECLAIMED WATER

Section 650-E Reclaimed Water System Pigging Report December 2010

Project: _____

PCU Project No.: _____

Procedures for pigging the system shall be in strict conformance with the Polk County Utilities Standards and Specifications Manual.

PIGGING PARAMETERS & SYSTEM INFORMATION

Date of Pigging:			
Time at Start of Pigging:		Time at End of Pigging:	
Pigged Segment Location:			
Pig Outside Diameter:		Pig's Maximum % Compression of Full Size	
Pig Exterior Material Composition:		Pig Interior Material Composition	
Pig Manufacturer:			

Pipe Type	Diameter, inches	Length, feet	Number of Times Pigged	Estimated Amount of Water Used for Pigging, gallons
Total Estimated Amount of Water Used for Pigging, gallons:				
Total Actual Amount of Water Used for Pigging, gallons:				

CONTRACTOR & INSPECTOR PERSONNEL INFORMATION

	Contractor	Inspector
Signature:		
Printed Name:		
Company Name:		
Phone Number:		
Date:		

CHAPTER 6 RECLAIMED WATER

Section 650-F RECLAIMED WATER SCHEDULE OF VALUES December 2010

Date: _____

Contractor: _____

Project: _____

PCU Project No.: _____

Item No.	Item Description	Qty.	Unit	Unit Cost ($)	Extended Cost ($)
1	Single Service, Long				
2	Single Service, Short				
3	Double Service, Long				
4	Double Service, Short				
5	Blow-Off Assembly, Complete				
6					
7					
8					
9					
10	4” PVC, AWWA C-900, DR 18, Purple				
11	4” DIP, Pressure Class 350, Epoxy-Lined, Bituminous Coated				
12	4” Gate Valve Assembly, Complete				
13	4” 11 ¼ Degree Bend, DI, C153, Epoxy-Lined, Bituminous Coated				
14	4” 22 ½ Degree Bend, DI, C153, Epoxy-Lined, Bituminous Coated				
15	4” 45 Degree Bend, DI, C153, Epoxy-Lined, Bituminous Coated				
16	4” 90 Degree Bend, DI, C153, Epoxy-Lined, Bituminous Coated				
17	4” Tee, DI, C153, Epoxy-Lined, Bituminous Coated				
18	4” Cross, DI, C153, Epoxy-Lined, Bituminous Coated				
19					
20	4” HDPE				
21					
22	6” PVC, AWWA C-900, DR 18,				

	Purple				
23	6” DIP, Pressure Class 350, Epoxy-Lined, Bituminous Coated				
24	6” Gate Valve Assembly, Complete				
25	6” 11 ¼ Degree Bend, DI, C153, Epoxy-Lined, Bituminous Coated				
26	6” 22 ½ Degree Bend, DI, C153, Epoxy-Lined, Bituminous Coated				
27	6” 45 Degree Bend, DI, C153, Epoxy-Lined, Bituminous Coated				
28	6” 90 Degree Bend, DI, C153, Epoxy-Lined, Bituminous Coated				
29	6” Tee, DI, C153, Epoxy-Lined, Bituminous Coated				
30	6” Cross, DI, C153, Epoxy-Lined, Bituminous Coated				
31					
32	6” HDPE				
33					
34	8” PVC, AWWA C-900, DR 18, Purple				
35	8” DIP, Pressure Class 350, Epoxy-Lined, Bituminous Coated				
36	8” Gate Valve Assembly, Complete				
37	8” 11 ¼ Degree Bend, DI, C153, Epoxy-Lined, Bituminous Coated				
38	8” 22 ½ Degree Bend, DI, C153, Epoxy-Lined, Bituminous Coated				
39	8” 45 Degree Bend, DI, C153, Epoxy-Lined, Bituminous Coated				
40	8” 90 Degree Bend, DI, C153, Epoxy-Lined, Bituminous Coated				
41	8” Tee, DI, C153, Epoxy-Lined d, Bituminous Coated				
42	8” Cross, DI, C153, Epoxy-Lined, Bituminous Coated				
43					
44	8” HDPE				
45					
46	10” PVC, AWWA C-900, DR 18, Purple				
47	10” DIP, Pressure Class 350 Epoxy-Lined, Bituminous Coated				

48	10” Gate Valve Assembly, Complete				
49	10” 11 ¼ Degree Bend, DI, C153, Epoxy-Lined, Bituminous Coated				
50	10” 22 ½ Degree Bend, DI, C153, Epoxy-Lined, Bituminous Coated				
51	10” 45 Degree Bend, DI, C153, Epoxy-Lined, Bituminous Coated				
52	10” 90 Degree Bend, DI, C153, Epoxy-Lined, Bituminous Coated				
53	10” Tee, DI, C153, Epoxy-Lined, Bituminous Coated				
54	10” Cross, DI, C153, Epoxy-Lined, Bituminous Coated				
55					
56	10” HDPE				
57					
58	12” PVC, AWWA C-900, DR 18, Purple				
59	12” DIP, Pressure Class 350, Epoxy-Lined, Bituminous Coated				
60	12” Gate Valve Assembly, Complete				
61	12” 11 ¼ Degree Bend, DI, C153, Epoxy-Lined, Bituminous Coated				
62	12” 22 ½ Degree Bend, DI, C153, Epoxy-Lined, Bituminous Coated				
63	12” 45 Degree Bend, DI, C153, Epoxy-Lined, Bituminous Coated				
64	12” 90 Degree Bend, DI, C153, Epoxy-Lined, Bituminous Coated				
65	12” Tee, DI, C153, Epoxy-Lined, Bituminous Coated				
66	12” Cross, DI, C153, Epoxy-Lined, Bituminous Coated				
67					
68	12” HDPE				
69					
70	16” PVC, AWWA C-905, DR 25, Purple				
71	16” DIP, Pressure Class 350, Epoxy-Lined, Bituminous Coated				
72	16” Gate Valve Assembly,				

	Complete				
73	16” 11 ¼ Degree Bend, DI, C153, Epoxy-Lined, Bituminous Coated				
74	16” 22 ½ Degree Bend, DI, C153, Epoxy-Lined, Bituminous Coated				
75	16” 45 Degree Bend, DI, C153, Epoxy-Lined, Bituminous Coated				
76	16” 90 Degree Bend, DI, C153, Epoxy-Lined, Bituminous Coated				
77	16” Tee, DI, C153, Epoxy-Lined, Bituminous Coated				
78	16” Cross, DI, C153, Epoxy-Lined, Bituminous Coated				
79					
80	16” HDPE				

Total Constructed Value: $ _____

Reviewer:_____ Date:_____

Comments_____

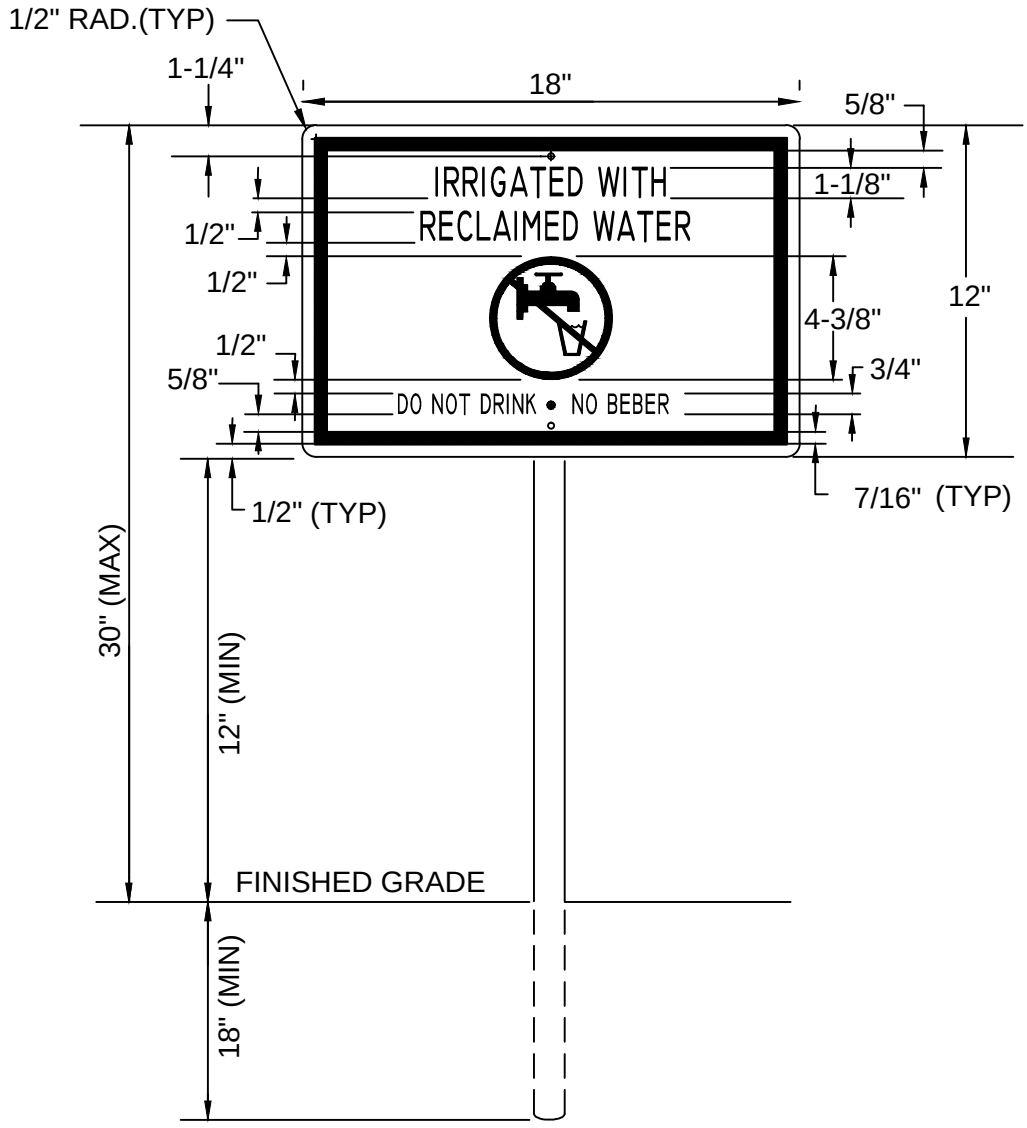

NOTES:

1. HEIGHT OF SIGN WILL DEPEND ON LOCATION AND SURROUNDING LANDSCAPE PLANT TYPES. IN ALL CASES, THE SIGN SHALL BE VISIBLE TO THE PUBLIC.
2. BACKGROUND SHALL BE WHITE, LETTERS SHALL BE PANTONE PURPLE 522C (HELVETICA, SWISS 721 COREL OR ACCEPTABLE EQUAL) AND BORDER SHALL BE PANTONE PURPLE 522C.
3. ENGINEERING GRADE REFLECTIVE MATERIALS SHALL BE USED.
4. SIGN MATERIAL SHALL BE OF 0.040 GAUGE ALUMINUM.
5. POST SHALL BE 2-3/8" OD ALUMINUM PIPE, HOT DIP GALVANIZED PER ASTM A-123. POST TO BE PROVIDED BY CONTRACTOR/CUSTOMER.
6. MOUNTING HARDWARE SHALL BE STAINLESS STEEL.
7. SIGNS SHALL BE PLACED BY THE CONTRACTOR IN ACCORDANCE WITH CHAPTER 62-610 "ACCESS CONTROL AND ADVISORY SIGNS", FAC, THE COUNTY APPROVED ENGINEERING PLANS AND/OR AS APPROVED BY PCU .

RECLAIMED WATER SIGNAGE "DO NOT DRINK WATER"	**FIGURE RW-01**
POLK COUNTY UTILITIES, FLORIDA	**DECEMBER, 2010**

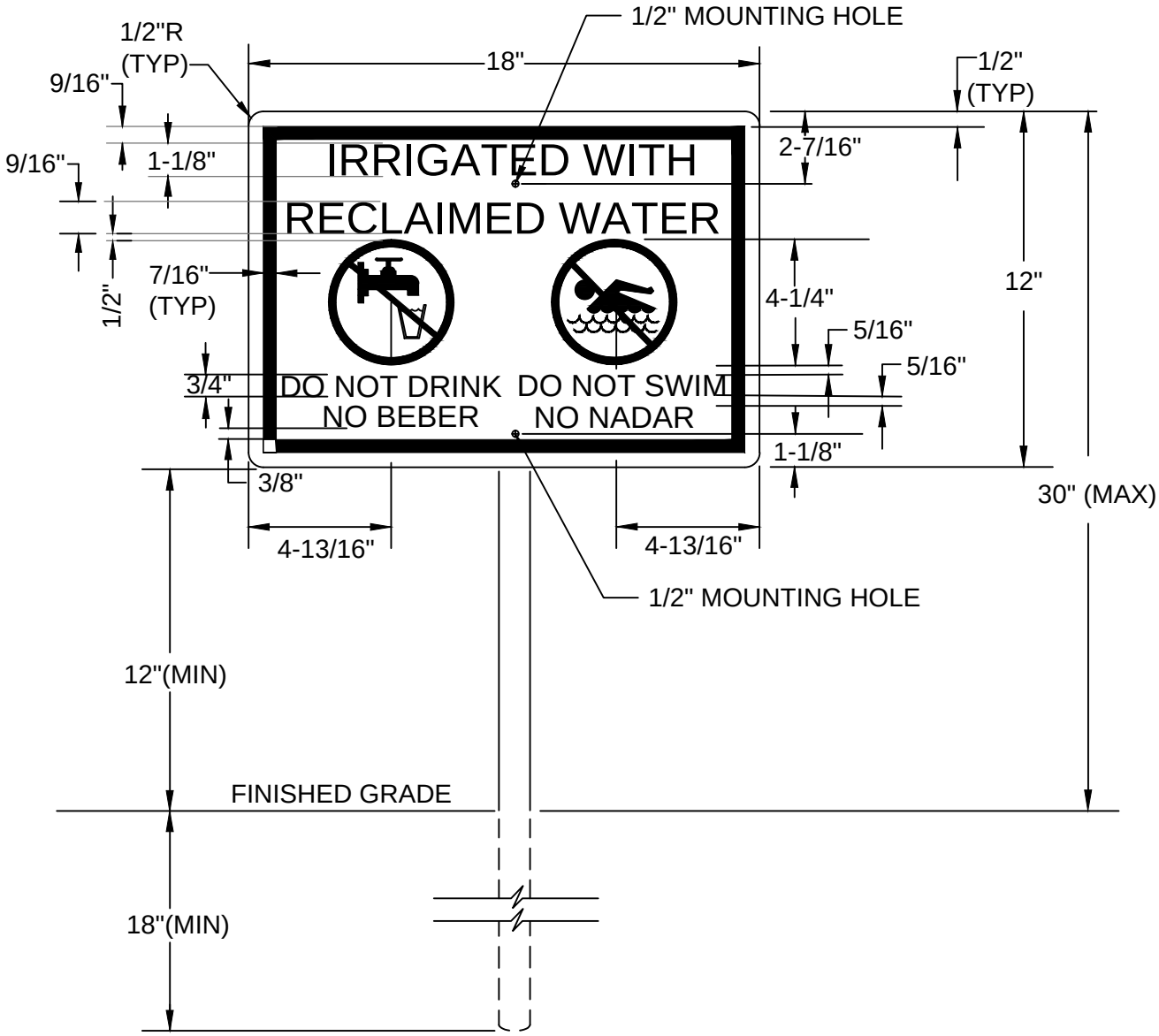

NOTES:

1. HEIGHT OF SIGN WILL DEPEND ON LOCATION AND SURROUNDING LANDSCAPE PLANT TYPES. IN ALL CASES, THE SIGN SHALL BE VISIBLE TO THE PUBLIC.
2. BACKGROUND SHALL BE WHITE, LETTERS SHALL BE PANTONE PURPLE 522C (HELVETICA, SWISS 721 COREL OR ACCEPTABLE EQUAL) AND BORDER SHALL BE PANTONE PURPLE 522C.
3. ENGINEERING GRADE REFLECTIVE MATERIALS SHALL BE USED.
4. SIGN MATERIAL SHALL BE OF 0.040 GAUGE ALUMINIUM.
5. POST SHALL BE 2-3/8" OD STEEL PIPE, HOT DIP GALVANIZED PER ASTM A-123. POST TO BE PROVIDED BY CUSTOMER.
6. MOUNTING HARDWARE SHALL BE STAINLESS STEEL.
7. SIGNS SHALL BE PLACED BY THE CONTRACTOR IN ACCORDANCE WITH CHAPTER 62-610 "ACCESS CONTROL AND ADVISORY SIGNS", FAC, THE COUNTY APPROVED ENGINEERING PLANS AND/OR AS APPROVED BY PCU.

RECLAIMED WATER SIGNAGE "DO NOT DRINK / DO NOT SWIM"	**FIGURE RW-02**
POLK COUNTY UTILITIES, FLORIDA	**DECEMBER, 2010**

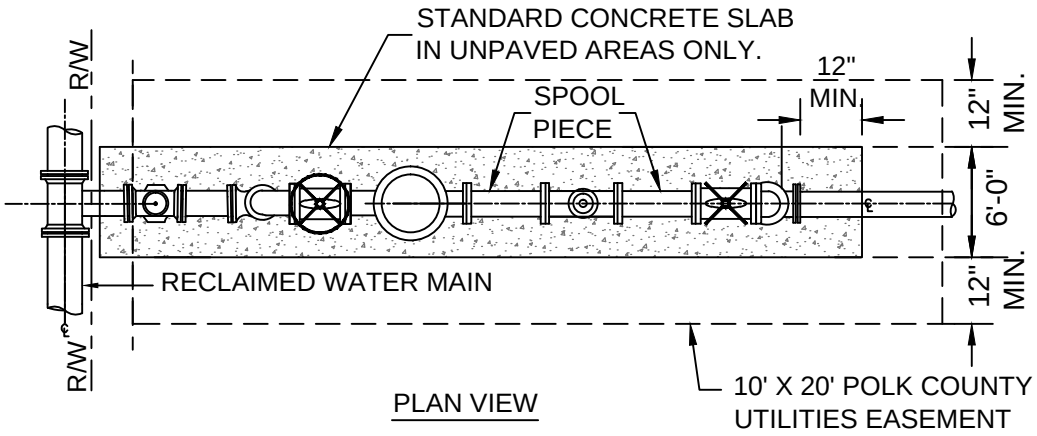

PLAN VIEW

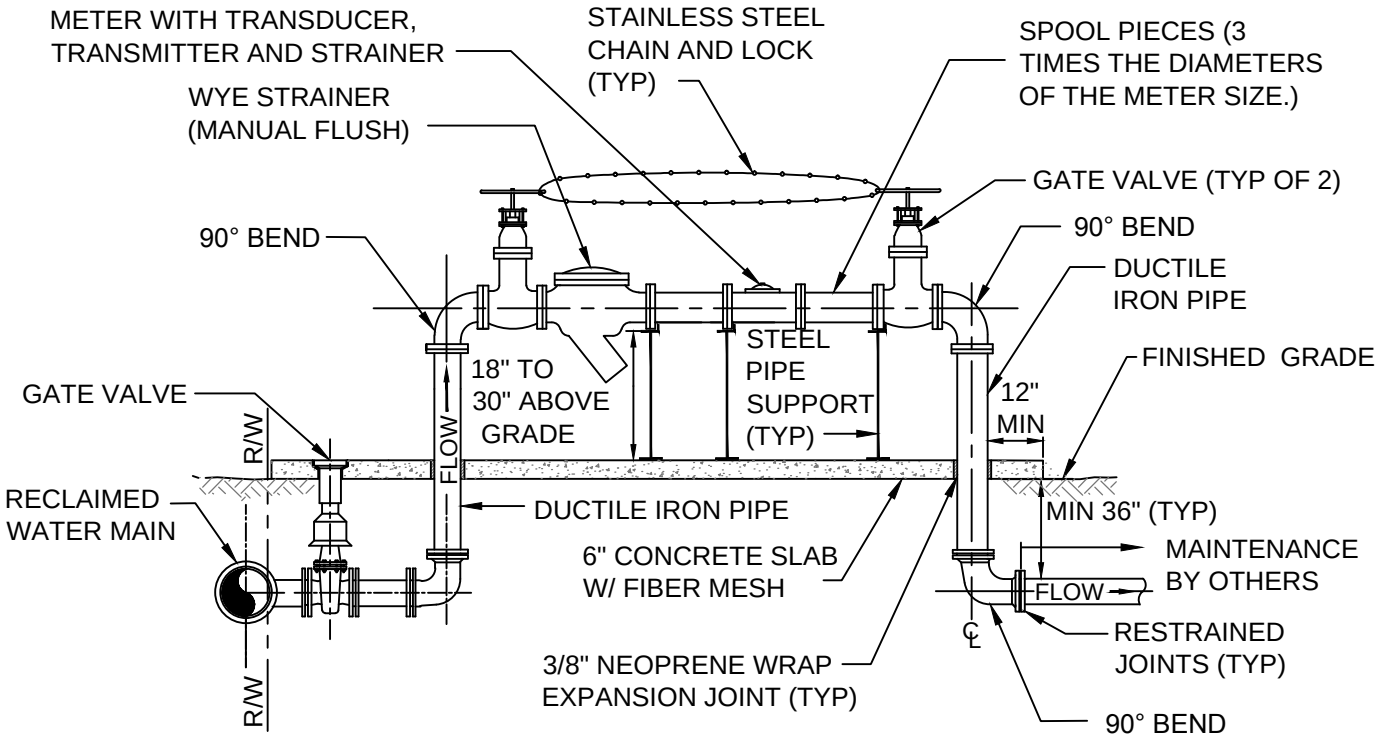

PROFILE VIEW

NOTES:

1. ALL PIPES AND FITTINGS ABOVE GRADE SHALL HAVE FLANGED ENDS.
2. ALL PIPES AND FITTINGS BELOW GRADE SHALL BE MECHANICAL RESTRAINED JOINT ENDS.
3. INSTALLATION SHALL COMPLY WITH ALL REQUIREMENTS OF CHAPTER 62-610 FAC.
4. PIPING AND APPURTENANCES SHALL BE PAINTED PANTONE PURPLE 522C. PVC PIPE SHALL BE COLORED FROM THE FACTORY WITH PANTONE PURPLE 522C USING LIGHT STABLE COLORANTS. PIPE SHALL BE MARKED TO POLK COUNTY SPECIFICATIONS.
5. METER SHALL BE CAPABLE OF ACCURATELY MEASURING THE ENTIRE RANGE OF EXPECTED FLOWS AND THE TYPE AND MANUFACTURER SHALL BE APPROVED BY THE PCU.

RECLAIMED WATER MASTER METER ASSEMBLY (LARGER THAN 2 INCH) WITHOUT STORAGE OR WELL BACKUP	**FIGURE RW-03**
POLK COUNTY UTILITES, FLORIDA	**DECEMBER , 2012**

Polk County Utilities, Florida

CROSS CONNECTION CONTROL POLICY MANUAL

Utilities Code Reference Manual 6(C)

Polk County Board of County Commissioners

Bob English	Melony Bell	Ed Smith	Todd Dantzler	Sam Johnson
District 1	District 2	District 3	District 4	District 5

Jim Freeman	Bill Beasley, PE	Gary Fries, PE
County Manager	Deputy County Manager	Utilities Director

December 2010

(Reference Manual Update: March 2012, September 2014)

CROSS CONNECTION CONTROL POLICY MANUAL

December 2010

10.1 GENERAL

This MANUAL, which contains the PCU Cross Connection Control Policy, shall serve to insure that the safety of the PCU potable water systems is maintained.

A. The ENGINEER or CUSTOMER shall be required to review this MANUAL before designing a project or installing a cross connection control assembly,

B. PCU believes this MANUAL will provide the ENGINEER or CUSTOMER with the understanding of cross-connections and cross connection control assemblies,

C. PCU shall insure that the standards and specifications as set forth in this MANUAL will be uniformly enforced,

D. PCU reserves the right to update this MANUAL as necessary due to changes in FDEP policies and regulations and/or AWWA standards.

E. Though PCU presently utilizes PCU staff to perform testing and repairs, PCU reserves the right to institute at any time a cross connection control assembly testing program that either requires the CUSTOMER to select and pay for a PCU approved private contractor to perform testing and repairs or a PCU contracted testing service to test and repair all assemblies on a cost recovery basis from the CUSTOMER.

10.2 GOALS

A. Protection of the Public Water Supply System

To protect the public potable water supply from the possibility of contamination or pollution by isolating actual and/or potential cross-connections from the public potable water supply system that could create backflow by backpressure or back-siphonage (Rule 62-555 or latest edition, F.A.C.).

B. Elimination of Cross-Connections

To promote the elimination and control of cross-connections, actual or potential, between the public potable water system(s), and any other system(s) or plumbing fixture(s) in existing and future buildings and developments.

C. Cross-Connection Control Program

To provide for the maintenance and operation of a continuing program of cross-connection control, which will systematically and effectively prevent the contamination or pollution of the public potable water supply system, as required by the FDEP (Rule 62-555 or latest edition, F.A.C.).

10.3 AUTHORITY

A. Federal

The United States Congress enacted the Safe Drinking Water Act (PL 93-532) into law on December 16, 1974. The purpose of the law is to assure that the nation's potable water supply systems meet minimum National Health Standards for the protection of public health.

In accordance with the Safe Drinking Water Act, the National Interim Primary Drinking Water Regulations were promulgated on December 24, 1975 and became effective on June 24, 1977. These regulations replaced the Public Heath Service Drinking Water Standard of 1962. It is stated in Appendix A of the rule that "minimum protection should include programs that result in prevention of health hazards, such as cross-connections."

The Safe Drinking Water Act and its regulations cover all public potable water systems with 15 or more service connections and systems that regularly serve 25 individuals. Under Section 1413 of the Safe Drinking Water Act, States may obtain primary enforcement responsibilities for their water quality program. However, the state's regulations must be equal to or exceed the federal regulations. The administrator of the EPA retains authority over states that do not obtain primacy.

B. State of Florida

The State was granted primacy over the water program under the authority of the "Florida Safe Drinking Water Act" Chapter 403-850-403.864 F.A.C. and Rule 17-22 “Public Drinking Water Systems”. The regulations went into effect in November of 1977. The State’s regulations were revised in November of 1987 to address the topic of cross-connection control and incorporated more specific language than that contained in the federal regulations. The State’s regulations (Rule 17-22, F.A.C.) were revised again, and renumbered in January of 1989 as Rules 17-555 and 17-560, F.A.C. In December of 1996, Florida revised and renumbered their regulations again to Rules 62-550 and 62-555, F.A.C., respectively.

Rule 62-550.200 (18), F.A.C. defines a cross-connection as "any physical arrangement whereby a public water supply is connected directly or indirectly with any other water supply system, sewer drain, conduit, pool, storage reservoir, plumbing fixture, or other device which contains or may contain contaminated water, sewage or other waste or liquid of unknown or unsafe quality which may be capable of imparting contamination to the public water supply as the result of backflow. By-pass arrangements, jumper connections, removable sections, swivel or changeable devices and other temporary or permanent devices through which or because of which backflow could occur are considered to be cross-connections. Rule 62-555.360(1), F.A.C. states, "Cross-

connection as defined in Rule 62-550.200, F.A.C. is prohibited."

Rule 62-555.360(2), F.A.C. states, "Community water systems shall establish a routine cross-connection control program to detect and prevent cross-connections that create or may create an imminent and substantial danger to the public health..."

The water purveyor is given the authority and responsibility to discontinue service to any CUSTOMER who refuses installation of a cross connection control assembly where an actual and/or a potential cross-connection may exist, (Rule 62-555.360(3), F.A.C.).

The authority to control and supervise the installation of approved cross connection control devices rests with the "supplier of water or his designated representative..." (Rule 62-555.360(4), F.A.C.).

C. Accepted Practices

The program shall utilize the accepted practices of the American Water Works Association guidelines as set forth in AWWA Policy M 14, entitled "Cross Connection Control" and Rule 62-555.330(6) and (7) F.A.C. or latest edition.

D. Objectives

A cross connection may result in the potable water system becoming a transmitter of diseases, and/or toxic materials and/or other hazardous liquids. Therefore, it is necessary to establish and maintain a cross-connection control program to protect the health of the PCU water system CUSTOMERS and/or users of the potable water system by the control of actual or potential cross-connections through methods of containment and/or isolation.

12.4 DEFINITIONS

A. Analogous Words and Terms

For the purpose of this MANUAL, the following analogous words and terms shall be interpreted to have similar meanings when not inconsistent with the context:

1. Words used in the singular number include the plural and words used in the plural number include the singular.

2. Words used in the present tense include the future tense.

3. The word "constructed" includes the word "erected," "built," "installed," "rebuilt", and "repaired".

4. The word "structure" includes the word "building".

CROSS CONNECTION CONTROL POLICY MANUAL

5. The word "include" is a word of enlargement and not limitation.

6. The word "shall" is mandatory and the word "may" is permissive.

B. Abbreviations

1. Agencies:

AASHTO	American Association of State Highway and Transportation Officials
ANSI	American National Standards Institute
APWA	American Public Works Association
ASSE	American Society of Sanitary Engineers
ASTM	American Society for Testing Materials
AWWA	American Water Works Association
DIPRA	Ductile Iron Pipe Research Association
EPA	United States Environmental Protection Agency
FCCCHR	Foundation for Cross Connection Control and Hydraulic Research of the University of Southern California
FDOT	Florida Department of Transportation
FDEP	Florida Department of Environmental Protection
FDNR	Florida Department of Natural Resources
FDOH	Florida Department of Health
FPSC	Florida Public Service Commission
HUD	Department of Housing and Urban Development (Federal and/or State)
LCDNR	Polk County Division of Natural Resources
LCDOT	Polk County Division of Transportation and Engineering

CROSS CONNECTION CONTROL POLICY MANUAL

PCU	Polk County Utilities Department
NCPI	National Clay Pipe Institute
NEC	National Electrical Code
NEMA	National Electrical Manufacturers Association
NFPA	National Fire Protection Association
OSHA	Occupational Safety and Health Administration (Federal and/or State)
UL	Underwriters Laboratories

2. General

DIP	Ductile Iron Pipe
fps	feet per second
F.A.C.	Florida Administrative Code
gpd	gallons per day
gpm	gallons per minute
HDPE	High Density Polyethylene
mgd	million gallons per day
p.s.i.	Pounds per Square Inch (gauge)
PVC	Polyvinyl Chloride
ROW	Right-of-Way

C. Definitions

Except where specific definitions are used within a specific section of this MANUAL for the purpose of such sections, the following terms, phrases, words, and their derivations shall have the meaning given when not inconsistent with the context.

AIR GAP SEPARATION: a physical separation between the free flowing discharge end

of a potable water supply pipeline and an open or non-pressure receiving vessel. An "approved air gap separation" shall be at least 2 times the diameter of the supply pipe measured vertically above the overflow rim of the vessel with a minimum separation distance of 3 inches.

APPROVED: reference an air-gap separation, a double check valve assembly, a reduced pressure principle cross connection control assembly, or other cross connection control assemblies or methods that meet the requirements of Rule 62-555.360(1) F. A. C.

ATMOSPHERIC VACUUM BREAKER (AVB): a cross connection control device that is operated by atmospheric pressure in combination with the force of gravity as defined by Rule 62-555 F.A.C. The unit shall be designed to work on a vertical plane only. The one moving part consists of a poppet valve that must be carefully sized to slide in a guided chamber and effectively shut off the reverse flow of water when a negative pressure exists. Use of this device shall be restricted to internal plumbing applications of structures and not used for containment purposes for the premises at the service connection. (ASSE 1001)

AUXILIARY WATER SUPPLY: any water supply on or available to the premises other than a PCU potable water supply. These auxiliary waters may include other potable water supplies, wells, ponds, pools, canals, retention areas, or any other natural or manmade water source.

BACKFLOW: the undesirable reversal of water flow or mixtures of water and other liquids, gases or other substances into the distribution pipes of the potable water system from any source or sources as defined by Rule 62-555 F.A.C.

BACK PRESSURE: any elevation of pressure in the downstream piping system (by pump, elevation of piping or by steam, and/or air pressure) above the supply pressure at the point of consideration that would cause or tend to cause a reversal of the normal direction of flow.

BACK SIPHONAGE: a form of backflow due to a reduction in system pressure, which causes a negative or sub-atmospheric pressure to exist at a site in water system that would cause or tend to cause a reversal of the normal direction of flow.

CROSS CONNECTION CONTROL ASSEMBLY: an assembly that has been manufactured in full conformance with AWWA Standards and meets the laboratory and field performance specifications of the FCCCHR. Cross Connection Control Assemblies shall also comply with the requirements of Rule 62-555 F.A.C.

CROSS CONNECTION CONTROL ASSEMBLY (TYPE): an effective assembly used to prevent backflow into a potable water system. The type of assembly used should be based on the degree of hazard either existing or potential. The types approved for use

by PCU CUSTOMERS for non-internal usage are:

Double Check Valve Assembly
Double Check Detector Assembly
Reduced Pressure Principle Assembly
Reduced Pressure Detector Assembly

or other assemblies approved by the PCU.

CERTIFIED CROSS CONNECTION CONTROL ASSEMBLY TESTER: (also known as a Certified Backflow Prevention Device Tester) a person who can provide documentation proving competency in testing cross connection control assemblies to the satisfaction of PCU. The TESTER shall have attended and successfully completed an AWWA approved course for Cross Connection Control Assembly Testers, or a course endorsed by the AWWA, or other programs or training acceptable to PCU and FDEP. All TESTERS wishing to do business within a PCU service area must attend a mandatory orientation class conducted by PCU staff prior to being placed on the Approved Certified Cross Connection Control Testers List.

CERTIFIED CROSS CONNECTION CONTROL ASSEMBLY REPAIRER: (also known as a Certified Backflow Prevention Assembly Repairer) a person who can provide documentation proving competency in repairing cross connection control assemblies to the satisfaction of the PCU. The REPAIRER shall have attended and successfully completed an AWWA approved course for cross connection control assembly repairers, or a course endorsed by the AWWA, or other programs or training acceptable to the PCU and FDEP. All REPAIRERS wishing to do business within a PCU Service Area must attend a mandatory orientation class conducted by PCU staff prior to being placed on the Approved Certified Cross Connection Control Assembly Repairers List.

CERTIFIED TEST GAUGES: calibrated and certified annually, proof of which shall be required, to FCCCHR Standards by a testing lab approved by PCU.

CHECK VALVE: a valve that is drip-tight in the normal direction of flow when the inlet pressure is at least 1 p.s.i. and the outlet pressure is 0 p.s.i. The check valve shall permit no leakage in a direction reverse to the normal flow. The closure element (e.g. clapper, poppet, or other design) shall be internally loaded to promote rapid and positive closure. An approved check valve is only one component of an approved cross connection control assembly, i.e., pressure vacuum breaker, double check valve assembly, or reduced pressure principle assembly.

CONTAMINATION: the impairment of the water quality that creates an actual hazard to the public health through poisoning or through the spread of disease or illness by sewage, industrial fluids, or any other means.

CROSS-CONNECTION: a connection or potential connection between any part of a potable water system and any other environment containing other substances in a manner that, under any circumstances would allow such substances to enter the potable water system. Other substances may be gases, liquids, or solids, such as chemicals, waste products, steam, water from other sources (potable or non-potable), or any matter that may change the color or add odor to the water.

CROSS CONNECTIONS-CONTROLLED: a connection between a potable water system and a non-potable water system with an approved backflow-prevention assembly properly installed and maintained so that it will continuously afford the protection commensurate with the degree of hazard.

CROSS-CONNECTION CONTROL BY CONTAINMENT: the installation of an approved backflow-prevention assembly at the water service connection to any CUSTOMER's premises, where it is physically and economically unfeasible to find and permanently eliminate or control all actual or potential cross-connections within the CUSTOMER's water system; or it shall mean the installation of an approved backflow-prevention assembly on the service line leading to and supplying a portion of a CUSTOMER's water system where there are actual or potential cross-connections that cannot be effectively eliminated or controlled at the point of the cross-connection.

CUSTOMER: shall mean the owner or operator of a private plumbing and/or water system who receives water from a PCU potable water system.

DIRECTOR: the person who is responsible for the day to day administration and management of Polk County Utilities.

DOUBLE CHECK DETECTOR ASSEMBLY (DCDA): a specifically designed assembly composed of an approved double check valve assembly with a specific bypass water meter and an approved double check valve assembly all properly sized. The meter shall register accurately for low flow rates and shall total all flows. The valves are located between two tightly closing resilient-seated shutoff valves as an assembly and equipped with properly located resilient-seated test cocks. This assembly shall be used to protect against a non-health hazard (pollutant) and uses subject to low water flows such as fire protection systems. (ASSE 1015)

DOUBLE CHECK VALVE ASSEMBLY (DCVA): an assembly consisting of two internally loaded check valves, either spring loaded or internally weighted installed as a unit between two tightly closing resilient-seated shutoff valves and fittings with properly located resilient-seated test cocks. This assembly shall be used to protect against a non-health hazard (pollutant) and uses not subject to low water flows. (ASSE 1015)

DUAL CHECK VALVE DEVICE (DuC): a mechanical device consisting of two independently acting spring-loaded check valves, does not normally include shutoff

valves, and may or may not be equipped with test cocks or ports. Though this device is effective against backpressure backflow and backsiphonage, it should only be used to isolate non-health hazards. This device is only intended for use on potable water service connections to single-family homes.

FIRE SUPPRESSION SYSTEM: any system, public or private, used exclusively for the purpose of having water ready for the extinguishing of fire, usually sprinkler systems, hose rack systems, or hydrant systems, metered and unmetered, connected or independent of the waterworks system.

HAZARD (DEGREE): derived from the evaluation of conditions within a system, which can be classified either as “pollution” (non-health) or "contamination" (health) hazard.

HAZARD (HEALTH): an actual or potential threat of contamination to the public potable water system or the CUSTOMER's potable plumbing and/or water system.

HAZARD (PLUMBING): an internal cross-connection in a CUSTOMER's potable water system that may be either a pollution or a contamination type hazard. This includes but is not limited to cross-connections with toilets, sinks, lavatories, wash trays, domestic washing machines and lawn sprinkling systems. Plumbing type cross-connections can be located in homes, apartment houses, hotels, commercial and industrial establishments, and other structures. An appropriate type of cross connection control assembly must properly protect all structures.

HAZARD (POLLUTION): an actual or potential threat to the physical properties of the potable water system or the potability of the public or the CUSTOMER's potable water system, but not constituting a health system hazard. This type of hazard results in the degradation of the potable water system to levels that can be aesthetically objectionable or could cause minor damage to the system or its appurtenances.

HEALTH AGENCY: the FDOH or FDEP, depending upon jurisdiction.

HOSE BIB VACUUM BREAKER (HBVB): any approved cross connection control device that consists of a spring loaded check valve that allows the device to vent to the atmosphere when the water is turned off. Use of this device shall be restricted to hose bib plumbing applications at or within structures as maybe required by the Florida Plumbing Code and not used for containment purposes of the premises at the service connection. (ASSE 1011)

INDUSTRIAL FLUIDS: any fluid or solution that may physically, chemically, biologically or otherwise contaminate or pollute potable water if introduced into the potable water system or CUSTOMER plumbing system or potable water system. Industrial fluids may include, but not be limited to polluted or contaminated water; all

types of process waters and "used waters" originating from the public potable water system which may deteriorate in sanitary quality; chemicals in fluid form; plating acids and alkalis; circulated cooling water connected to an open cooling tower and/or cooling waters that are chemically or biologically treated or stabilized with toxic substances; contaminated natural water such as from wells, springs, streams, rivers, bays, harbors, seas, irrigation canals or systems, etc., oil, gases, glycerin, paraffins, caustic and acid solutions; and other liquid and gaseous fluids used in commercial/industrial type processes or for fire fighting purposes.

INDUSTRIAL PIPING SYSTEM (CUSTOMER'S): any system used by the CUSTOMER for transmission, confinement or storage of any liquid, solid or gaseous substance other than an approved potable water supply. An industrial piping system includes all pipes, conduits, tanks, receptacles, fixtures, equipment and appurtenances used to produce, convey or store substances that can pollute or contaminate potable water.

INTERNAL USE: the utilization of a device or devices within any premises on the CUSTOMER's side of a water supply meter and/or master meter assembly and beyond the primary Cross Connection Control Device that protects the public water supply.

LABORATORY (APPROVED FOR TESTING): the FCCCHR or other testing laboratory approved by PCU.

MANUAL: the most recent edition of the Cross Connection Control Policy Manual of Polk County, Florida.

MASTER METER ASSEMBLY: a meter and cross connection control assembly combination that serves two or more entities on a single non-single family or non-duplex residential premise, such as shopping centers, schools, office complexes, and multi-family developments. The assembly shall be used to provide potable water for either domestic use only or combined domestic and fire suppression use applications. The meter shall be an ultra sonic type for domestic uses and a fire-line type for combined uses. The cross connection control assembly shall be a reduced pressure principle assembly type in all situations.

OWNER: the legally recognized owner, or authorized representative, of real property within Polk County.

PLUMBING OFFICIAL: the Polk County Building Official.

PLUMBING SYSTEM: the water supply and distribution pipes, plumbing fixtures and traps, soil, waste and vent pipes, building drains and sewers, including their respective connections, devices and appurtenances within the property line of the premises, and water-treating or water-using equipment.

POLK COUNTY UTILITIES (PCU): the Polk County entity that has the responsibility of administering, operating, and maintaining the Polk County potable water, wastewater, and reclaimed water utility systems.

POLLUTION: an impairment of the quality of potable water to a degree that does not create a hazard to public health, but does adversely and unreasonably affect the aesthetic qualities of such waters for domestic use.

PRESSURE VACUUM BREAKER ASSEMBLY (PVB): an assembly containing an independently operating internally loaded check valve and an independently operating loaded air inlet valve located on the discharge side of the check valve, with properly located resilient-seated test cocks and tightly closing resilient-seated shutoff valves attached at each end of the assembly. This assembly is designed to protect against a health hazard (contaminant) under a backsiphonage condition only and should not be used if backpressure could develop in the downstream piping. This assembly is designed to be used typically on irrigation systems not utilizing an auxiliary water source and not having elevated sprinkler heads. This assembly shall not be used within a PCU service area and shall be substituted with a Reduced Pressure Principle Assembly. (ASSE 1020)

RECLAIMED WATER (commonly referred to as Reuse Water and Effluent Reuse): the treated and disinfected effluent from a wastewater treatment plant used for irrigation, dust control, and all other purposes permitted by the F.A.C.

REDUCED PRESSURE DETECTOR ASSEMBLY (RPDA): an assembly containing two independently acting approved check valves together with a hydraulically operating, mechanically independent pressure differential relief valve located between the check valves with a specific bypass water meter and an approved double check valve assembly all properly sized. The meter shall register accurately for low flow rates and shall total all flows. These units are located between two tightly closing resilient-seated shutoff valves as an assembly and equipped with properly located resilient-seated test cocks. This assembly shall be designed to protect against a health hazard (contaminant) and uses subject to low water flows. (ASSE 1013)

REDUCED PRESSURE PRINCIPLE ASSEMBLY (RPPA): an assembly containing two independently acting approved check valves together with a hydraulically operating, mechanically independent pressure differential relief valve located between the check valves. These units are located between two tightly closing resilient-seated shutoff valves as an assembly and equipped with properly located resilient-seated test cocks. This assembly shall be designed to protect against a health hazard (contaminant) and uses not subject to low water flows. (ASSE 1013)

REFERENCE MANUAL 6(A): the Polk County Utilities Administration Manual, adopted by reference herein.

REFERENCE MANUAL 6(B): the Polk County Utilities Standards and Specifications Manual, adopted by reference herein.

REFERENCE MANUAL 6(C): this Manual, the Polk County Utilities Cross-Connection Control Policy Manual, adopted by reference herein.

REFERENCE MANUAL 6(D): the Polk County Utilities Reclaimed Water Policy Manual, adopted by reference herein.

REFERENCE MANUAL 6(E): the Polk County Industrial Wastewater Pre-Treatment Policy Manual, adopted by reference herein.

REFERENCE MANUAL 6(F): the Polk County Utilities Water Conservation Policy Manual, adopted by reference herein.

REFERENCE MANUAL 6(G): the Polk County Utilities Fats, Oils, and Grease Policy Manual, adopted by reference herein.

SERVICE CONNECTION: the terminal end of a service connection from the public potable water system, i.e., where the water purveyor may lose jurisdiction and sanitary control over the water at its point of delivery to the CUSTOMER's water system. If a meter is installed at the end of the service connection, then the service connection shall mean the downstream end of the meter.

WATER (POTABLE): any water, which according to recognized standards is safe for human consumption.

WATER PURVEYOR: the public or private owner or operator of the potable water system supplying an approved water supply to the public.

WATER SUPPLY (APPROVED): any public potable water supply that has been investigated and approved by FDEP. The system must be operating under a valid permit.

WATER SUPPLY (AUXILIARY): any water supply available to the premises other than the purveyor's approved public potable water supply. Auxiliary water supplies include water from another purveyor's potable water supply; other water sources such as a well, spring, river, stream, harbor, reclaimed water, industrial fluids, or any other type of water supply not controlled by the primary water purveyor.

WATER SUPPLY (UNAPPROVED): a water supply that has not been approved for human consumption by FDEP and/or is not operating under a valid permit.

WATER SYSTEM(S) (CUSTOMER'S): any plumbing and/or water system located on the CUSTOMER's premises whether supplied by a public potable water system or an auxiliary water supply. The system or systems may be either a potable water system or an industrial piping system.

WATER SYSTEM(S) (CUSTOMER'S POTABLE): that portion of a privately owned potable plumbing and/or water system between the point of potable water delivery by the water purveyor and the CUSTOMER's point of use. This system will include all pipes, conduits, tanks, receptacles, fixtures, equipment and appurtenances used to produce, convey, store, or use the potable water.

WATER SYSTEM (PUBLIC): the PCU water supply system operated as a public water system under a valid permit from FDEP and other applicable regulatory agencies to supply potable water for domestic purposes. This system will include all sources, facilities, and appurtenances between the source and the point of delivery such as valves, pumps, pipes, conduits, tanks, receptacles, fixtures, equipment, and appurtenances use to produce, convey, treat, or store potable water for public consumption or use.

10.5 RECORDS, ENFORCEMENT, AND INSPECTIONS

A. Responsibility of PCU

PCU is primarily responsible for the prevention of contamination and pollution of the public water mains. Such responsibility begins at the point of origin of the public water supply and includes adequate treatment facilities and water mains, and ends at the point of entrance to the CUSTOMER's water system, provided adequate backflow and back-siphonage protection is maintained on all water supply systems directly connected to the water purveyor's public system.

PCU is responsible for the protection of the potable water distribution system from contamination or pollution due to the backflow of contaminants or pollutants through any and all water service connections. It shall be the goal of PCU to require an approved cross connection control assembly installation at the premises of all CUSTOMERS, unless otherwise exempted in this MANUAL. PCU shall require that each existing and future CUSTOMER, as specified below, have an approved cross connection control assembly installed in accordance with this MANUAL. The size of the assembly or device installed shall not be less than the size of the meter currently being used.

PCU shall designate the location of all cross connection control assemblies. Though the assembly shall typically be within 1 foot of the CUSTOMER's side of the water meter, or as otherwise approved by PCU, assemblies shall always be located on the premise of the CUSTOMER. When the location of an assembly requires that it be placed inside of a building or similar structure and is approved by specifically approved by PCU, an aluminum sign as detailed in the "Utilities Standards and Specifications Manual" and measuring 12 inches high by 18 inches long, shall be bolted to the wall a minimum of 24 inches above the point where the potable water service or fire line enters the building. The sign shall have a white background with black lettering stating "Cross Connection Control Device Located Inside".

Representatives of PCU, bearing proper credentials and identification, shall be permitted to enter upon all properties for the purpose of sampling and testing of the water, or make inspections and observations of the connections to the public water supply system. Refusal to allow inspection of any water using equipment, plumbing or other cross connections shall cause PCU to discontinue water service and constitute a violation of this MANUAL.

Cross connection control will be especially required for single-family and duplex residential CUSTOMERS when there is an auxiliary water supply, swimming pool on site, or when a cross connection or potential for a cross connection is found. This does not limit the authority of PCU to inspect single-family residential properties for the purpose of protecting the public water system.

In order to determine the degree of hazard to the public potable water system, Section 10.6 B below shall be used to determine the required assembly type that needs to be installed. As an alternative to the list, a survey may be made of the CUSTOMER's premises by PCU to determine the type of assembly needed. The survey need not be a detailed inspection of the location or disposition of the water lines, but can be confined to establishing the water uses on the premises, the existence of cross connections, and the availability of auxiliary or non-potable water supplies. Site inspections may be performed when deemed necessary by PCU to ensure compliance with this MANUAL.

B. New Construction

During the development review process, the ENGINEER shall utilize this MANUAL to determine the CUSTOMER's responsibilities concerning the installation of cross connection control assemblies.

C. New Accounts on Existing Facilities

Upon application for water service by the CUSTOMER, and where determined necessary by PCU in accordance with this MANUAL, the CUSTOMER shall have a maximum of 90 calendar days from the date of application to have a cross connection control assembly or assemblies installed.

D. Retrofitting Facilities of Existing CUSTOMERS

All existing CUSTOMERS, unless otherwise exempted by this MANUAL, shall install the appropriate assembly within 180 calendar days of being notified by PCU whenever a change occurs to the CUSTOMER's property that requires the installation of an assembly in accordance with this MANUAL. The CUSTOMER shall be notified as stated below.

Any existing assembly that has been correctly installed, regularly tested, and continues to

function properly will be allowed to continue in service unless the degree of hazard is such as to supersede its effectiveness or results in an unreasonable risk to public health, as determined by PCU. In such a case, the CUSTOMER shall replace or upgrade the assembly to the current standards of PCU.

E. Responsibility of the CUSTOMER

The CUSTOMER has the primary responsibility of preventing contaminants and pollutants from entering his water supply system, and from entering the public water main or water source from his water supply system. The CUSTOMER shall protect his water supply system against actual or potential cross-connection, backflow, or back-siphonage, as required by this MANUAL, and other applicable regulations. Unless PCU provides testing and maintenance services, the CUSTOMER shall assure that all assemblies are tested and maintained in the working condition required. The CUSTOMER shall assure that all necessary permits are obtained for new water supply system installations and for alterations or repair to existing systems.

F. Records

Records concerning the installation and testing of an assembly shall be kept on-site by the CUSTOMER and accessible for review for a period of not less than 10 years. PCU shall be permitted reasonable access to these records during normal business hours, as required, for the purpose of monitoring compliance with this MANUAL. PCU shall maintain copies of all test reports, repair summaries, or other communications relating to this cross-connection control program for a period of not less than 10 calendar years in accordance with Rule 62-555, F.A.C.

G. Written Notice

PCU shall issue a written notice by certified mail when an approved cross connection control assembly or device is required at a CUSTOMER's water connection. Upon receipt of such written notice, the CUSTOMER shall install or have installed an approved cross connection control assembly or device at the sole expense of the CUSTOMER within the specified time from the date of CUSTOMER’s receipt of the notification.

H. Violations

Failure, refusal, or inability on the part of the CUSTOMER to install an assembly or device shall constitute grounds for refusal of water or fire service or the discontinuance of service to the premises until such an assembly or device has been properly installed.

Submission by any person of any false statement or misrepresentation in any application, record, report, plan, or other document required by this MANUAL shall constitute a

violation of the conditions for water service. Any person who has not complied with Federal, State, and Local Laws or Ordinances, and this MANUAL regarding cross-connection control shall be considered in violation of the conditions for water service by PCU.

I. Enforcement Policy

No water service connection to any premises shall be installed or maintained by PCU unless the water supply is, or has received official development plan approval to be, protected as required by Federal, State, and Local Laws or Ordinances, and this MANUAL.

Water service to a CUSTOMER shall be discontinued by PCU if a cross connection control assembly required by this MANUAL is not installed, tested, and maintained, or if it is found that a cross connection control assembly has been removed, by-passed, or an unprotected cross-connection exists on the premises. Water service shall not be restored until such conditions or defects are corrected at the CUSTOMER's expense. Other methods of enforcement shall be used as appropriate, including, but not limited to, the County's Code Enforcement Procedures.

CERTIFIED TESTERS and REPAIRERS shall be removed from their applicable lists for a minimum period of 1 year upon the third documented violation of this MANUAL and related requirements. All notifications of violation and suspension to each TESTER or REPAIRER generated by PCU shall be by certified mail.

J. Frequency of Testing

Due to changes in models or components of equipment, methods of manufacturing, and additions to plants, buildings, etc., water use requirements undergo continual change. As new cross connections may be installed and existing protection may be bypassed, removed, or otherwise ineffective, an annual or biennial detailed inspection of all water usage is required. Unless PCU provides testing and maintenance services, all assemblies shall be tested by and at the expense of the CUSTOMER on an annual basis unless circumstances require a more frequent testing schedule, at a minimum.

K. Costs

All costs related to the disconnection or re-connection of water service, installation, maintenance, and/or testing of a device shall be the responsibility of CUSTOMER.

L. Auxiliary Water Supply

The public water system shall be protected against backflow and back-siphonage by the installation of an approved cross connection control assembly if an auxiliary water supply

is found on the CUSTOMER's premises that may or may not be safe in bacteriological or chemical quality.

M. Industrial Fluids

If any industrial fluids or any other objectionable substances are handled in such a fashion as to create an actual or potential hazard to the public water system, the public water system shall be protected against backflow and back-siphonage. This protection shall include the installation of a cross connection control assembly in the service line. The type of cross connection control assembly installed shall be appropriate for the potential degree of hazard.

N. Internal Cross-Connections

If an internal cross-connection(s), undefined plumbing arrangement(s) exists, or if entry to all or portions of the premises is not readily accessible for inspection purposes, the public water supply system shall be protected against backflow and back-siphonage by the installation of a master meter assembly composed of an appropriate potable water meter and a cross connection control device at the point where the service line enters the subject premises.

PCU shall have the authority to require cross connection control assemblies in order to separate potential internal cross connections sources from any internal potable water supply source that the general public may use.

O. Reclaimed Water

Any property that is served by a PCU potable water system and also utilizes reclaimed water shall utilize a Cross Connection Control Assembly at the CUSTOMER’s potable water service connection in accordance with this MANUAL.

All premises utilizing reclaimed water shall be required to provide PCU approved public notice signs at all entrances identifying the area as a reclaimed water use area. Non-irrigation users of reclaimed water shall provide similar notification signage at the point of reclaimed water use. All signage shall comply with the “Utilities Standards and Specifications Manual”.

10.6 DEGREE OF HAZARD AND TYPE OF PROTECTION

A. Degree of Hazard

The type of cross connection control assembly required shall depend upon the degree of hazard. The use of a detector meter as part of the assembly shall be required for all cross connection control assemblies of 2½ inches and above in size on any potable water

service that is not metered.

1. Non-Potable Water Supply

   When an auxiliary water supply is present, the public water system shall be protected by an approved air-gap separation device or an approved reduced pressure principle assembly.

2. Objectionable, but Not Hazardous

   When water or a substance(s) is present that would be objectionable if introduced into the potable water system but not hazardous to public health, the public water system shall be protected by an approved double check valve assembly.

3. Actual or Potential Hazard

   Any material dangerous to health that is handled in such a fashion as to create an actual or potential hazard to the potable water system, the potable water system shall be protected by an approved air-gap separation device or an approved reduced pressure principle assembly.

B. Level of Protection

All controlled and uncontrolled cross-connections, either actual or potential, to the potable water system shall be protected by an approved air-gap separation or an approved cross connection control assembly. In the event of a conflict regarding the level of protection needed, the most protective assembly or device shall be utilized.

"DCVA" indicates an approved double check valve assembly. "RPPA" indicates an approved reduced pressure principle assembly. Detector type assemblies (DCDA and RPDA) shall be utilized when a connection to a potable water main is not metered such as in the case of a fire line service, private fire hydrant, other fire suppression type installations, etc. NOTE: If approved by PCU, a physical air-gap separation may take the place of a device.

Type of Type of Facility	Minimum Protection
Aircraft and Missile Storage/ Manufacturing Facility	RPPA
Automotive Repair or Manufacturing Facility	RPPA
Automotive Parts Stores (No Onsite Repairs)	DCVA
Automotive, Truck, and Boat Sales Businesses	RPPA
Auxiliary Water Systems	RPPA
Bakeries	RPPA

CROSS CONNECTION CONTROL POLICY MANUAL

December 2010

Barber Shops, Beauty Salons, Health Clubs, and Health Spas	RPPA
Beverage Bottling Facilities	RPPA
Breweries and Distilleries	RPPA
Canneries	RPPA
Car Wash Facilities	RPPA
Chemical Processing Storage or Manufacturing Facilities	RPPA
Chemical or Biological Testing Labs	RPPA
Chemically Contaminated Water Systems	RPPA
Cold Storage Facilities	DCVA
Commercial Rental Units(where use may vary w/ tenant)	RPPA
Convenient Stores	RPPA
Dairies and Dairy Products Processing Facilities	RPPA
Day Care Facilities (Children and Adult)	RPPA
Dental Offices and Laboratories	RPPA
Department Stores (No repairs or chemical storage)	DCVA
Department Stores (With repair facilities or chemical storage)	RPPA
Dry Cleaning and Laundry Facilities	RPPA
Electrical Transmission or Generating Facilities	RPPA
Fertilizer Storage and Manufacturing Facilities	RPPA
Film Processing Facilities	RPPA
Fire Protection Systems (No Additives)	DCDA
Fire Protection Systems (With Additives)	RPDA
Food Processing Facilities	RPPA
Government Facilities	
A.) Contamination Hazard	RPPA
B.) Pollution Hazard	DCVA
Hardware or Lumber Supply Stores	RPPA
Hospitals	RPPA
Hotels and Motels (Single Story Only)	DCVA
Hotels and Motels (Multi-Story)	RPPA
Ice Manufacturing Facilities	RPPA
Irrigation Systems	RPPA
Laboratories	RPPA
Laundries and Dye Works	RPPA
Machine Tool Manufacturing Facilities	RPPA
Manufacturing Facilities (non-toxic substances on-site)	DCVA
Manufacturing Facilities (toxic substances on-site)	RPPA
Marinas and Boat Docks	RPPA
Master Metered Premises	RPPA
Medical Facilities	RPPA
Medical Clinics	RPPA
Metal Manufacturing, Cleaning, and Fabricating Facilities	RPPA

Morgues or Mortuaries	RPPA
Motion Pictures Studios	RPPA
Multi-Family Structures	
with 3 Units or More on One Meter	RPPA
Multiple Services that are Interconnected	RPPA
Multi Story Buildings (Multi-Family or Commercial)	RPPA
Nursing Homes and Rehabilitation Facilities	RPPA
Office Buildings (Single Story Only)	DCVA
Office Buildings (Multi-Story)	RPPA
Office Units (Single Story Only)	DCVA
Oil and Gas Production or Storage Facilities	RPPA
Packing Houses or Rendering Facilities	RPPA
Paper and Paper Products Facilities	RPPA
Pest Exterminating Businesses	RPPA
Pharmaceutical of Cosmetic Facilities	RPPA
Photo Processing Facilities	RPPA
Photograph Studios	RPPA
Plastic Injection and Molding Facilities	RPPA
Plating Facilities	RPPA
Ponds or Similar Appurtenances	RPPA
Power Plants	RPPA
Premises where Inspections are Restricted	RPPA
Premises with Boilers	RPPA
Premises having a Water Storage Tank or Reservoir	RPPA
Reclaim Water Usage at Single Family Resid. Premises	RPPA
Reclaim Water Usage at all other Premises	RPPA
Restaurants and other Food Preparation Establishments	RPPA
Restricted, Classified, or Closed Facilities	RPPA
Retail Businesses (Single Story Only)	DCVA
Retail Businesses (Multi-Story)	RPPA
Rubber Processing Plants, Natural or Synthetic	RPPA
Sand and Gravel Processing Facilities	RPPA
Schools and Colleges	RPPA
Sewage and Stormwater Collection and Pumping Facilities	RPPA
Solar Heating Systems	RPPA
Strip Malls and Centers	RPPA
Super Markets and Grocery Stores	RPPA
Swimming Pools and Club Houses	RPPA
Veterinary Establishments	RPPA
Warehouse and Storage Facilities	RPPA
Waterfront Facilities and Industries	RPPA

C. Fire Protection Systems

CROSS CONNECTION CONTROL POLICY MANUAL

All fire protection system service lines shall have an approved double check detector assembly installed on the premises prior to the connection point with the potable water system. Mains specifically for private fire hydrants shall have an approved double check detector assembly installed on the premises prior to the connection point with a PCU potable water system. A fire protection system, which incorporates chemical additives, shall have an approved reduced pressure detector assembly installed on the premises prior to the connection point with the potable water system.

D. Assessment of Health Hazard

NOTE: H = Health Hazard, NH = Non-Health Hazard

Description of Cross Connection	Assessment of Hazard
Aspirator	H
Bedpan Washers	H
Autoclaves	H
Specimen Tanks	H
Sterilizers	H
Cuspidors	H
Lab Bench Equipment	H
Autopsy and Mortuary Equip.	H
Sewage Pumps	H
Sewage Ejectors	H
Fire-fighting Systems w/ Toxic Liquid Foam Concentrates	H
Connection to Sewer Pipes	H
Connection to Plating Tanks	H
Connection to Salt Water Cooling Systems	H
Tank Vats or other Vessels Containing Toxic Substance	H
Dye Vats or Machines	H
Cooling Towers w/ Chemical Additives	H
Trap Primers	H
Steam Generators	NH
Heating Equipment	
Commercial	NH
Domestic	NH
Irrigation Systems	H
Irrigation Systems	

w/ Chemical Additives or Agents	H
Swimming Pools	
Public	NH
Private	NH
Vending Machines	NH
Ornamental Fountains	NH
Degreasing Equipment	NH
Lab Bench Equipment	NH
Hose Bibs	NH
Trap Primers	NH
Flexible Shower Heads	NH
Steam Tables	NH
Washing Equipment	NH
Shampoo Basins	NH
Kitchen Equipment	NH
Aspirators	NH
Domestic Space-Heating Boiler	NH

10.7 PREMISES WITH RESTRICTED ACCESS

Any premises where security requirements or other prohibitions or restrictions exist and it is impossible or impractical to make a complete in-plant cross-connection survey, the potable water system shall be protected against backflow or back-siphonage by the installation of an approved cross connection control assembly. Maximum protection will be required for restrictive premises. An approved air-gap separation or an approved reduced pressure principle cross connection control assembly shall be installed in each service to these premises.

10.8 APPROVAL, TESTING, AND REPAIRS

1. Approved Assemblies

A List of Approved Cross Connection Control Assemblies shall be maintained by PCU and provided upon request to any interested parties. Assemblies and devices that are considered not to be easily maintained and repairable in the opinion of PCU shall not be considered for approval.

An approved cross connection control assembly shall be both manufactured in full conformance with the standards established by the AWWA entitled: AWWA C505-69 “Standards for Reduced Pressure Principle and Double Check Valve Assemblies”, or later adopted version and conform with the laboratory and field performance specifications of the FCCCHR. All assemblies and devices must comply with both of the above standards, not one or the other.

CROSS CONNECTION CONTROL POLICY MANUAL

All approved cross connection control assemblies shall also be in compliance with the standards set forth by the following agencies:

FDEP - Rule 62-555.360 and 62-555.335 F.A.C.

ASSE

Florida Plumbing Code

2. Testing

In the event that PCU elects not to provide testing and maintenance services, it shall be the duty of the CUSTOMER at any premise where cross connection control assemblies are installed to have certified inspections and operational tests made at least once per year. The CUSTOMER will be notified by mail approximately 30 calendar days in advance of the required testing due date. In those instances where PCU deems the hazard to be exceptional, additional certified inspections may be required at more frequent intervals. These inspections and tests shall be at the expense of the CUSTOMER and shall be performed by a CERTIFIED TESTER, pre-approved by PCU, using certified test gauges. A List of Certified TESTERS and REPAIRERS shall be maintained by PCU and made available to the general public. In addition to the submittal of proof of certification in the appropriate area of specialization from a PCU approved agency located within the State, all CERTIFIED TESTERS and REPAIRERS shall attend an Orientation Class conducted by PCU prior to having their names placed on the above mentioned List and conducting business as a CERTIFIED TESTER or REPAIRER within a PCU service area.

Before each field test the CERTIFIED TESTER shall take the following steps:

1. Notify the CUSTOMER that the water service will need to be shut-off during the test. If a fire protection system will be affected, PCU and the Fire Department shall also be notified. Testing shall be coordinated with the CUSTOMER.

2. Identify that the proper assembly is being tested by checking the identification tag and meter number.

3. Inspect the assembly for minimum clearances and properly located shut off valves and test cocks.

4. Observe the assembly and surroundings for signs of leakage, vandalism, or alterations.

After each field test the CERTIFIED TESTER shall supply the owner and PCU with a copy of the County approved Test and Maintenance Report within 7 calendar days, or a

retest will be required.

1. Test Requirements for RPPA's and RPDA's

   Test 1. The operation of the pressure differential relief valve shall maintain a zone between the two check valves at least 2 psi less than the supply pressure.

   Test 2. The number 2 shut-off valve shall close fully and be leak tight against backpressure and back siphonage.

   Test 3. The number 2 check valve shall maintain a static pressure drop across the check valve of at least 1 psi in the direction of flow. The check valve shall permit no leakage in a direction reverse to the normal flow.

   Test 4. The number 1 check valve shall maintain a pressure of at least 5 psi and have a higher differential value than the relief valve. The check valve shall permit no leakage in a direction reverse to the normal flow.

2. Test Requirements for DCVA's and DCDA's

   Test 1. The number 1 and number 2 shut off valves shall close fully and be leak tight.

   Test 2. The number 1 check valve shall maintain a static pressure drop across the check valve of at least 1 psi in the direction of flow. The check valve shall permit no leakage in a direction reverse to the normal flow.

   Test 3. The number 2 check valve shall maintain a static pressure drop across the check valve of at least 1 psi in the direction of flow. The check valve shall permit no leakage in a direction reverse to the normal flow.

   Testing double check valve assemblies with limited access installations may require the down stream reference point being raised with a sight tube to an elevation level with the test gauge.

C. Repairs

In the event that PCU elects not to provide testing and maintenance services, it shall be the duty of the CUSTOMER to conform to scheduled testing. If deficiencies are noted during the test, such assemblies shall be repaired, overhauled, or replaced at the expense of the CUSTOMER by a Certified Cross Connection Control Assembly REPAIRER pre-approved by PCU. If an existing assembly needs to be repaired or overhauled, only original manufacturer parts shall be used.

If an existing assembly needs to be taken out of line for repairs, the assembly and

installation shall meet all current policies, standards, and specifications as set forth in this MANUAL, before it is put back into service.

If an existing assembly or device needs to be replaced, the CUSTOMER shall contact PCU before any work is done. At this time the assembly or device with its associated piping, valves, and fittings shall be brought up to current standards and specifications. The TESTER and REPAIRER shall furnish records of such tests, repairs, and overhauls to PCU and CUSTOMER. Upon completion of any repair, over haul, or replacement of an assembly or device, an operational test shall be made before the system is put back into service.

10.9 INSTALLATION

All cross connection control assemblies shall be installed in strict accordance with the manufacturer's installation instructions, the Utilities Standards and Specifications Manual, and the following guidelines. All cross connection control assemblies shall be installed by the CUSTOMER or a plumbing contractor authorized to do business within Polk County. All required permits shall be obtained prior to the start of any installation. The installation of assemblies and devices over 2½ inches in diameter shall require a pre-construction conference with PCU. The installation of all assemblies shall comply with this MANUAL, which depicts the installation of specific cross connection control assemblies. Due to the inherit water pressure loss across an Assembly, the maximum design water pressure for all proposed developments requiring the installation of a cross connection control device shall be based on a maximum incoming residual pressure of 40 p.s.i. on the CUSTOMER's side of the Assembly. If actual operational higher pressures are required by the CUSTOMER for whatever reason, then the CUSTOMER shall install pressure booster pumps at the CUSTOMER's expense. In addition, all installations shall conform to the following minimum requirements:

A. Location

PCU shall designate the location of all cross connection control assemblies. Though the assembly shall typically be within 1 foot of the CUSTOMER's side of the water meter, or as otherwise approved by PCU, assemblies shall always be located on the premise of the CUSTOMER. When the location of an assembly requires that it be placed inside of a building or similar structure and is specifically approved by PCU, an aluminum sign approved by PCU and measuring 12 inches high by 18 inches long, shall be bolted to the wall a minimum of 24 inches above the point where the potable water service or fire line enters the building. The sign shall have a white background with black lettering stating "Cross Connection Control Assembly Located Inside". All assemblies that are subject to potential contact with vehicular traffic shall be protected by the installation of bollards constructed and installed in accordance with this MANUAL.

B. Support

CROSS CONNECTION CONTROL POLICY MANUAL

All assemblies and devices shall be adequately supported to prevent the assembly from sagging.

C. Flushing

Pipelines shall be thoroughly flushed to remove foreign material and debris before installing the assembly.

D. Reduced Pressure Principle Assembly

The RPPA (or RPDA) shall be installed in a horizontal position unless otherwise recommended by this MANUAL or approved by PCU. The Assembly shall not be installed in a pit. If installed in an enclosure, the enclosure shall be provided with an adequate gravity drain to a positive outfall and an air gap between the relief valve port on the Assembly and the positive outfall drain or the maximum flood level in the enclosure, whichever is highest. If the Assembly is installed inside a building, an adequate drain shall be provided and there shall be an air gap between the relief valve port on the Assembly and the drain or the maximum flood level in the building, whichever is higher. To facilitate testing and maintenance, the bottom of the Assembly, 2 inches and smaller in diameter, shall be located a minimum of 12 inches and a maximum of 18 inches above the ground or floor. Assemblies measuring 2½ inches and larger in diameter shall not be less than 18 inches or more than 36 inches above the ground or floor. The side of the Assembly with the test cocks shall be located a minimum of 24 inches from the nearest fixed wall or obstruction. All other sides of the Assembly shall be located a minimum of 12 inches from the nearest fixed wall or obstruction.

E. Double Check Valve Assembly

The DCVA (or DCDA) shall be installed in a horizontal position unless otherwise recommended by this MANUAL or approved by PCU. If the Assembly is installed in an enclosure or building, adequate drainage shall be provided to maintain a dry location. If the Assembly is installed in a location susceptible to flooding, the Assembly shall be of the top entry type and the test cocks on the Assembly shall be plugged. To facilitate testing and maintenance, the bottom of the Assembly, 2 inches and smaller in diameter, shall be located a minimum of 12 inches and a maximum of 18 inches above the ground or floor. Assemblies measuring 2½ inches and larger in diameter shall not be less than 18 inches or more than 36 inches above the ground or floor. The side of the Assembly with the test cocks shall be located a minimum of 24 inches from the nearest fixed wall or obstruction. All other sides of the Assembly shall be located a minimum of 12 inches from the nearest fixed wall or obstruction.

F. Concrete Pads

CROSS CONNECTION CONTROL POLICY MANUAL

Concrete pads shall be poured under all cross connection control assemblies and devices that are installed outside in accordance with the Utilities Standards and Specifications Manual. The width of the pad shall be a minimum of 24 inches, or shall extend at least 12 inches beyond the widest point on all sides of the assembly or device, whichever is greater. The length of the pad shall be 12 inches longer on both ends than the length of the entire assembly from outside of pipe to outside of pipe, which shall include the point where each pipe enters the ground. Adequate reinforcing using fiber mesh and/or No. 5 steel reinforcement bars shall be used and all piping passing through the pad shall be sleeved. The minimum thickness the pad shall be 4 inches and the minimum strength of the concrete shall be 3000 psi.

G. Painting and Color Coding

All cross connection control devices, assemblies, and associated piping, valves, and fittings shall be painted using the color codes stated below to protect the devices and for identification purposes. The CUSTOMER shall be responsible for the initial painting and the continual maintenance of all such painted surfaces. Meters shall not be painted.

Potable Water Systems	Blue
Fire Protection Systems	Red
Reclaimed Water Systems	Purple
Wastewater Systems	Green

If approved by PCU, the color Black may be substituted for the color Blue on a case by case basis for esthetic purposes.

All exterior paint used shall be long lasting and ultra-violet radiation stabilized to prevent fading. Each assembly shall be repainted during its annual test as a minimum.

H. Pipe and Fittings

All piping and fittings 2 inches and smaller in diameter shall be sweated copper or threaded brass from the point where the bend fitting leaves the CUSTOMER's service line underground on the upstream side of the assembly to the point where the bend fitting meets the CUSTOMER's service line underground on the downstream side of the assembly. Unions shall be used on all installations wherever possible.

All piping and fittings 2½ inches and larger in diameter shall be flanged ductile iron from the point where the bend fitting leaves the CUSTOMER's service line underground on the upstream side of the assembly to the point where the bend fitting meets the CUSTOMER's service line underground on the downstream side of the assembly. Restraining of joints shall be accomplished as appropriate.

I. Existing Systems

Prior to the installation of a new or upgraded cross connection control assembly or device on an existing service, PCU shall be notified by the CUSTOMER.

1. Fire Systems

   Prior to the installation of a new or upgraded cross connection control assembly of an existing fire protection system, the Fire Department shall be notified. The hydraulics of the system shall be checked, and modifications recommended, by a registered professional engineer or certified fire protection system contractor so that the system shall be in compliance with this MANUAL. All modifications shall be the responsibility of the CUSTOMER.

2. Plumbing

   The CUSTOMER shall be responsible for inspecting the existing plumbing system, and making all repairs necessary, to insure that all thermal expansion devices and/or pressure relief valves on all water heaters and other equipment are functioning properly, and are installed per the Florida Plumbing Code, prior to and immediately after the completion of the assembly's installation.

3. Potential Pressure Loss

   As cross connection control assemblies or devices may result in a water pressure reduction of approximately 7 to 14 psi, water pressures at peak usage times shall be observed by the CUSTOMER prior to and after the installation. If the resulting pressures are not acceptable to the CUSTOMER for whatever reason, then the CUSTOMER may install pressure booster pumps at the CUSTOMER's expense.

10.10 CROSS CONNECTION CONTROL AND RECLAIMED WATER

A. Design Requirements

All reclaimed water systems shall be designed and constructed in accordance with the F.A.C. and the "Utilities Standards and Specifications Manual". The PCU criteria for the construction or water and sewer systems shall, as a minimum, include those requirements specified in the F.A.C. If the criteria is found to be in conflict or less restrictive than the provisions of the F.A.C., then the provisions of the F.A.C. shall prevail and shall govern the design and construction of reclaimed water systems owned and operated by PCU. More specifically, these requirements shall include, as a minimum, the following items:

1. Cross-Connection Control

Cross-connection of reclaimed water systems with any other water supply source or system is specifically prohibited.

An approved cross connection control device shall be installed on any potable water line serving property also served by reclaimed water.

2. Setback Requirements

Plans for subdivisions and commercial sites that include provisions for reclaimed water service shall identify the locations of existing potable water wells on all adjacent properties within 200 feet of the boundary of any potential reclaimed water wetted surface.

Reclaimed water application systems will not be considered or permitted within 75 feet of an existing or proposed FDEP and/or FDOH permitted potable water supply well.

Reclaimed water shall not be applied to the ground within 75 feet of potable water well.

New potable water well construction shall be prohibited within 75 feet of reclaimed water irrigation area.

Minimum vertical and horizontal separations between reclaimed water lines, potable water lines and sewage lines shall be maintained in accordance with FDEP and/or FDOH regulations.

Reclaimed water irrigation systems located within 100 feet of public eating, drinking, or bathing facilities shall utilize low trajectory spray heads, or methods approved by PCU to reduce aerosol drift.

Reclaimed water irrigation systems shall be constructed and operated so as to minimize over-spray onto impervious surfaces, such as sidewalks, roadways, etc.

B. Signage and Identification

All sites utilizing reclaimed water shall be required to provide County approved public notice signs at all entrances identifying the area as a reclaimed water use area. Non-irrigation users of reclaimed water shall provide similar notification signage at the point of reclaimed water use. All signage shall be approved by PCU and comply with the STANDARD DRAWINGS contained within the "Utilities Standards and Specifications Manual".

All reclaimed water transmission lines shall be color-coded and/or labeled to specifically identify said piping as reclaimed water lines.

All new subdivisions and site plans shall specify the use of purple colored pipe as the standard material for reclaimed water service lines or other materials approved by PCU. All reclaimed water service lines shall include a locking curb stop and tag/label identifying the use of reclaimed water.

1. Prohibited Uses

   Reclaimed water shall not enter any residential dwelling for any purpose.

   Reclaimed water shall not be designated as a fire suppression source within any PCU service area.

   There shall not be any above ground hose bib connections to the reclaimed water system. All hose bib connections must be located in below grade, locked vaults, and clearly labeled as being non-potable.

   Reclaimed water shall not be used to fill swimming pools, hot, tubs, wading pools, spas, or similar appliances, tanker trucks used for transporting products intended for human consumption are prohibited from transporting reclaimed water.

   Use of reclaimed water for any purpose other than those allowed by the F.A.C. shall be prohibited.

   Failure to comply with the regulations governing the use of reclaimed water shall be cause for the discontinuation of reclaimed water service and any other penalties as appropriate.

2. Other Uses

   Reclaimed water to be used for purpose other than urban landscape irrigation requires specific authorization by PCU.

C. Installation Requirements

The installation of reclaimed water mains shall be as specified in the "Utilities Standards and Specifications Manual".

All reclaimed water irrigation systems shall be permanent and installed in the ground.

CROSS CONNECTION CONTROL POLICY MANUAL

D. Activation

All applications for reclaimed water service shall require a site inspection by PCU prior to activation.

All sites receiving reclaimed water must have an approved cross connection control assembly on the incoming potable water supply line as referenced in this MANUAL. No reclaimed water service shall be activated without all approved cross connection control assemblies being properly installed and tested.

Upon activation of the reclaimed water system, PCU may require testing to be performed at the CUSTOMER's expense to verify the separation of the potable and reclaimed water systems. Said testing shall include the "turn-off" of the potable supply valve and the opening of hose bibs and faucets. Any noted flow of water from any such faucet shall result in the immediate disconnection of the reclaimed water system. The reclaimed water system shall not be reactivated without demonstration that the possible cross-connection has been eliminated.

Approval for activation shall be given only after all inspection items have been completed and approved in writing by PCU.

APPROVED CROSS CONNECTION CONTROL ASSEMBLIES LIST

Rev March 2012

APPENDIX A-100

December 2010

Only the assemblies listed below shall be utilized within or connected to a PCU potable water system.

Double Check Valve Assemblies (DCVA)

Manufacturer and Model	Size	Orientation
Wilkins 950 XL	.75”	Horizontal & Vertical Up
Wilkins 950 XL	1”, 1.25”, 1.50”, 2”	Horizontal
Wilkins 950 XLD	.75”	Horizontal & Vertical Up
Wilkins 350 – OS&Y Valves	2.5”, 3”,4”,6”,8”,10”	Horizontal & Vertical Up
Wilkins 350 – OS&Y Valves	12”	Horizontal
Wilkins 350 G	6”	Horizontal & Vertical Up

Reduced Pressure Principle/Reduced Pressure Detector Assemblies (RPPA/RPDA)

Wilkins 375 – OS&Y Valves	2.5”, 3”, 4”, 6”, 8”, 10”	Horizontal
Wilkins 975 XL	.75”, 1”, 1.25”, 1.5”, 2”	Horizontal
Wilkins 975 XLSE	.75”, 1”, 1.25”, 1.5”, 2”	N & Z
Wilkins 975 XLSEU	.75”, 1”, 1.25”, 1.5”, 2”	N & Z
Wilkins 975 XLV	.75”, 1”	N & Z

Double Check Detector Assemblies (DCDA)

Wilkins 350DA – OS&Y Valves	2.5”, 3”,4”,6”,8”,10”	Horizontal & Vertical Up
Wilkins 350DA – OS&Y Valves	12”	Horizontal
Wilkins 350DAG – OS&&Y Valves	2.5”, 3”,4”,6”,8”,10”	Horizontal & Vertical Up
Wilkins 350DAG – OS&Y Valves	12”	Horizontal

Polk County Utilities, Florida

RECLAIMED WATER POLICY MANUAL

Utilities Code Reference Manual 6(D)

Polk County Board of County Commissioners

Bob English	Melony Bell	Ed Smith	Todd Dantzler	Sam Johnson
District 1	District 2	District 3	District 4	District 5

Jim Freeman	Bill Beasley, PE	Gary Fries, PE
County Manager	Deputy County Manager	Utilities Director

December 2010

(Reference Manual Update: December 2012
September 2014)

RECLAIMED WATER POLICY MANUAL

December 2010

1.0 INTRODUCTION

1.1 General

Potable water is a valuable resource which needs to be conserved, and reclaimed water is also a valuable water resource which can be used safely for irrigation and other non-potable purposes, thereby substantially contributing to the conservation of potable water. The COUNTY has determined to establish and construct a reclaimed water system which will make reclaimed water available in certain areas of the county for irrigation and other authorized non-potable uses. This MANUAL establishes certain terms and conditions regarding the use of the reclaimed water system.

1.2 Intent

It shall be the policy of Polk County Utilities (PCU) to make reclaimed water available for irrigation purposes and other authorized non-potable uses in certain areas of the county where it is determined that the construction of a reclaimed water transmission/distribution system is necessary, practical, and beneficial in accordance with the LAND DEVELOPMENT CODE and the COMPREHENSIVE PLAN. The reclaimed water system shall be constructed in sections to provide service to designated areas as determined by PCU pursuant to the terms and conditions set forth herein.

1.3 Purpose

It is the purpose of this MANUAL to promote the public health, safety, and welfare by the establishment of a Reclaimed Water Program, by regulating the construction of reclaimed water transmission/distribution systems determined to be necessary and beneficial, and by governing the use of reclaimed water.

1.4 Applicability

The provisions of this MANUAL shall apply to certain areas of the COUNTY where it is determined that the construction of a reclaimed water system is practical, necessary, and beneficial in accordance with the LAND DEVELOPMENT CODE and the COMPREHENSIVE PLAN. The reclaimed water distribution system shall be constructed to provide service to designated areas determined by PCU pursuant to the terms and conditions set forth herein.

2.0 DEFINITIONS

The following words, terms, and phrases, when used in this MANUAL, shall have the meanings ascribed to them in this section, except where the context clearly indicates a different meaning.

RECLAIMED WATER POLICY MANUAL

December 2010

ACTIVE: PCU owned line or system charged with reclaimed water.

AVAILABLE: the definition of this term as utilized in the Polk County Land Development Code regarding the availability of reclaimed water service.

BACKFLOW: the undesirable reversal of water flow or mixtures of water or other liquids, gases, or other substances into the distribution pipes of the potable water system from any source or sources as defined by rule 62-555 F.A.C.

CONCURRENCY AND ENTITLEMENTS DIVISION (CED) – Polk County Division that grants exceptions for requests to reclaimed water system.

COMPREHENSIVE PLAN: the Polk County Comprehensive Plan.

COUNTY: Polk County Board of County Commissioners, Polk County, Florida and/or its designated representative or the political subdivision of the State of Florida.

CROSS CONNECTION CONTROL ASSEMBLY (CCC): an assembly that has been manufactured in full conformance with AWWA standards and meets the laboratory and feed performance specifications of the FCCHR cross connection control assemblies that also comply with the requirement of Rule 62-555, FAC

CROSS-CONNECTION: a connection or potential connection between any part of a potable water system and any other environment containing other substances in a manner that, under any circumstances would allow such substances to enter the potable water system. Other substances may be gases, liquids, or solids, such as chemicals, waste products, steam, water from other sources (potable or non-potable), or any matter that may change the color or add odor to the water.

CUSTOMER OR USER: any person, firm, or corporation, or governmental entity, using or receiving water from the PCU reclaimed water system. Reclaimed water customers are further classified as follows:

- **Retail**: any individual customer served by a single meter that is 3-inches or less in size, where access to another source of non-potable water for irrigation is unavailable. Includes but is not limited to: residential customers; individual commercial establishments such as small office and retail centers; common areas and greenways of subdivisions (billed to Homeowners Association or Property Owners Association); etc.

- **Bulk-Priority**: any commercial or industrial customer served by one or more meters 3-inches in size or greater, downstream of which there are no retail customers and where storage and/or access to another source of non-potable water for irrigation and other uses is unavailable. May include, but not limited to: certain

multi-family residential complexes; commercial tracts occupied by more than one tenant; industrial users; parks and playgrounds; schools; cemeteries; etc.

- **Bulk-Interruptible**: any commercial or industrial user served by one or more meters 3-inches in size or greater, downstream of which there are no metered retail customers and where storage and/or access to another source of non-potable water for irrigation and other uses is available. May include, but not limited to: golf courses; certain multi-family residential complexes; industrial users; etc.

The difference between the two classes of Bulk users is the availability of an access to an alternate supply of non-potable water, which determines the degree of interruptibility of the two classes. Because Bulk-interruptible customers have storage capability and/or an alternate supply, they will be the first to be shut down in the event of a reclaimed water shortage. Therefore, they may expect to pay less for the service. Bulk-priority customers are less likely to be shut down in the event of a reclaimed water shortage than Bulk-interruptible customers, but more likely to be interrupted than Retail customers. Therefore, Bulk-priority customers may expect to pay more than Bulk-interruptible customers and less than Retail customers for the service.

Retail customers are the least interruptible class of customers. Therefore, retail customers will be the last customers to be shut down in the event of a reclaimed water shortage and may expect to pay higher rates for the service than the other two classes of customers.

DIRECTOR: the person who is responsible for the day to day administration and management of Polk County Utilities.

DISTRIBUTION MAINS: conduits used to supply reclaimed water from transmission mains to service lines.

DISTRICT: the Water Management District and/or Florida Department of Environmental Protection (FDEP) having jurisdiction within the Regional Utility Service Area.

ENGINEER: an individual currently licensed to practice engineering in the State of Florida.

LAND DEVELOPMENT CODE: the Polk County Land Development Code.

NON-RESIDENTIAL: a land development project intended for construction of infrastructure improvements for non-residential unit(s) and/or use. Non-residential units and/or uses include all units/uses that are not individually metered single family dwellings, including, but not limited to: commercial, industrial, institutional, short-term rental, and other business enterprises, and all master-metered residential developments, such as duplex, triplex, quadruplex, apartment, condominium, and other multi-family units/complexes, mobile home parts, recreational vehicle parks, etc.

RECLAIMED WATER POLICY MANUAL

POLK COUNTY UTILITIES (PCU): the Polk County entity which has the responsibility of administering, operating, and maintaining the Utility Systems.

POTABLE WATER: water from any source which has been approved for human consumption by the COUNTY and appropriate regulatory agencies.

RECLAIMED WATER: in the context of this MANUAL, wastewater that has received at least advanced secondary treatment, high-level disinfection, and filtration after treatment and discharge from a domestic wastewater treatment facility as specified in Rule 62-610.460 Florida Administrative Code (FAC), for the purpose of reclaimed water in areas of unrestricted public access. Reclaimed water may also include non-potable water obtained from augmentation wells and other sources.

REFERENCE MANUAL 6(A): the Polk County Utilities Administration Manual, adopted by reference herein.

REFERENCE MANUAL 6(B): the Polk County Utilities Standards and Specifications Manual, adopted by reference herein.

REFERENCE MANUAL 6(C): the Polk County Utilities Cross-Connection Control Policy Manual, adopted by reference herein.

REFERENCE MANUAL 6(D): this Manual, the Polk County Utilities Reclaimed Water Policy Manual (MANUAL), adopted by reference herein.

REFERENCE MANUAL 6(E): the Polk County Industrial Wastewater Pre-Treatment Policy Manual, adopted by reference herein.

REFERENCE MANUAL 6(F): the Polk County Utilities Water Conservation Policy Manual, adopted by reference herein.

REFERENCE MANUAL 6(G): the Polk County Utilities Fats, Oils, and Grease Policy Manual, adopted by reference herein.

REGIONAL UTILITY SERVICE AREA: those designated portions of Polk County in which PCU maintains the exclusive right to provide public utility systems.

RESIDENTIAL: a user which is a single residential dwelling unit served by an individual meter, not including a short-term rental unit.

REUSE OR USE: in the context of reclaimed water, the deliberate application and use of reclaimed water, in compliance with FDEP and Water Management District rules.

SERVICE CONNECTION: the point at which the customer's irrigation system is connected to the PCU reclaimed water system. For individual residential customers, the service connection shall be located inside a purple meter box as described in the "Utilities Standards and Specifications Manual". For commercial customers, the service connection shall be located immediately downstream of the reclaimed water meter and isolation valves.

SERVICE LINE: that conduit used to supply reclaimed water from the distribution main to the property line.

SHORT-TERM RENTAL: a dwelling unit which is made available more than three times a year for periods of fewer than 30 calendar days or one calendar month at a time, whichever is less, for use, occupancy or possession by the public, regardless of the form of ownership of the unit. Dwelling units commonly referred to as "timeshares," "vacation rentals," and "holiday rentals" which possess the above characteristics are included within this definition.

TRANSMISSION MAINS: those conduits used to supply reclaimed water from the pumping station or treatment plant to the distribution mains.

3.0 AUTHORITY

3.1 Authority to Adopt Rules and Regulations

The COUNTY shall have the authority to establish reasonable rules and regulations concerning the use of reclaimed water, or to amend existing rules and regulations so as to remain in compliance with applicable State and Federal regulations.

3.2 Authority to Adopt Rates, Fees, and Charges

The COUNTY shall have the authority to establish rates, fees, and charges for the reclaimed water system and to provide terms and conditions for the payment and collection of same.

3.3 Water Management Districts

The jurisdiction of the COUNTY includes lands located in both the Southwest Florida Water Management District and the South Florida Water Management District. It would be advantageous, under most hydrologic conditions, for the COUNTY's population to be subject to one consistent set of year-round water conservation measures, and when necessary, one consistent set of temporary water shortage restrictions on a countywide basis. Given that the majority of the population in the county and the majority of the public water supplies and domestic wells that serve this population are currently located within the Southwest Florida Water Management District, the most logical set of related rules to follow would be those of the Southwest Florida Water Management District.

The COUNTY shall have the authority to adopt ordinances and policies to protect the water resources of the county from inefficient use at all times and over-utilization during periods of water shortage by assisting the Southwest Florida Water Management District in the implementation of its Year-Round Water Conservation Measures and Water Shortage Plan.

The COUNTY has adopted a Year-Round Water Conservation Measures and Water Shortage Ordinance to establish that the use of reclaimed water shall adhere to the irrigation restrictions established by the Southwest Florida Water Management District for groundwater and other sources regulated by the water management districts. This includes establishing provisions and enforcement policies related to relaxation of these restrictions for reclaimed water when deemed necessary by the County Manager.

4.0 CONNECTION AND USE

4.1 Availability of Service

Other than Bulk Users, reclaimed water service will not be provided to any customer that does not have an active potable water source in place, except as specified in Section 6.0 of this MANUAL. Single family residential lots shall have active potable water service prior to activation of reclaimed water service. A developer may submit a written request to the Concurrency and Entitlements Division for an exception to the requirement of this Section if the certificate of occupancy has not been issued, structures are unoccupied, and no irrigation well or alternative source of water exists for the establishment of landscaping in the development.

The required distance for a development to construct an off-site reclaimed water main in order to connect to an existing reclaimed water system with available capacity shall be as specified in the LAND DEVELOPMENT CODE and the COMPREHENSIVE PLAN. A developer or other interested person, after contacting the PCU Capacity Engineer, shall refer to the current Master Plan to determine the time frame of reclaimed water service availability within a particular Regional Utilities Service Area.

4.2 Requirement to Install Onsite Distribution and Irrigation Systems

Where a proposed development or any parcel of land is to be served by a wastewater treatment facility that has available capacity to produce public access quality reclaimed water suitable for reclaimed water in areas of unrestricted public access as stipulated in Chapter 62-610, Part III, FAC, PCU shall require a developer or user, in accordance with the provisions of the LAND DEVELOPMENT CODE and the COMPREHENSIVE PLAN, to install, at his cost, the necessary onsite and offsite mains, valves, pumps, meters, common area irrigation systems, signage, storage facilities, and other appropriate appurtenances for the reuse of reclaimed water. Such installation shall be a condition of system acceptance or development approval and shall be completed prior to issuance of certificate of occupancy.

A developer or other user may request to be excused from the requirement of reclaimed water usage only when he can establish to the satisfaction of PCU that reclaimed water is not reasonable for use on his property, such as proven environmental concerns or other considerations. A request for an exception from the requirements of this Section shall be in writing from the developer or property owner and shall set forth the reasons for the desired exception. In the event an exception is granted by PCU, which has been coordinated with the Concurrency and Entitlements Division, the developer or property owner may still be required, at their cost, to extend reclaimed water mains around or across his property and convey the necessary unencumbered Polk County Utilities Easements and/or public rights-of-way to the COUNTY to facilitate the transmission of reclaimed water to adjoining or nearby properties for reclaimed water reuse or disposal.

4.3 Requirements to Connect

It shall be unlawful to use the PCU potable water system for irrigation purposes after reclaimed water becomes active at a particular site. Customers with existing underground irrigation systems using the PCU potable water system shall be required to disconnect said systems from the PCU potable water system and connect to the reclaimed water system within 90 calendar days of written notice of activation.

All new irrigation systems constructed after the initial effective date of March 5, 2003 in areas where PCU plans to make reclaimed water available shall connect to the PCU reclaimed water system upon the earlier of the following two dates:

A. When reclaimed water has not been activated at the time of construction of the irrigation system, then connection shall be required within 90 days after receipt of written notice from PCU that reclaimed water has been activated.

B. When reclaimed water is available and active at the time of construction of the irrigation system, then connection shall be required immediately and such connection shall be a condition to connection of the improvements on said property to the PCU potable water system.

Customers may continue to use existing irrigation wells for irrigation purposes after reclaimed water is available if there is an existing valid permit for the well on the subject property. In such case, the customer may request and be granted permission in writing from PCU to wait until that permit expires before connecting to the active reclaimed water system. The irrigation well permit shall not be renewed. A copy of the permit shall be provided to PCU along with the request for an exception from the requirements of this Section. PCU will coordinate time extensions due to permit expirations with the Concurrency & Entitlements Division.

Customers with existing irrigation wells who wish to connect to the reclaimed water system must first physically disconnect the irrigation system from the existing irrigation well and provide evidence of an air gap separation between the well and the irrigation system, or

otherwise provide, at the customer's own expense, a cross connection control assembly and valving system between the irrigation well and the irrigation system meeting the specifications stipulated by PCU.

4.4 Application for Connection

Customers in designated Regional Utility Service Areas shall connect to the reclaimed water system when service is available and upon submission of a proper application in accordance with the "Utilities Administration Manual" and compliance with all PCU requirements. Compliance with this MANUAL in no way relieves the property owner or user from the responsibility for obtaining and fulfilling the requirements of construction or other permits required by and issued by agencies other than PCU.

Application for connection to the reclaimed water system shall be made to PCU on the form provided for that purpose. Such service charges and inspection fees as established by the Board shall be paid to PCU at the time the application is filed.

In accordance with the "Utilities Standards and Specifications Manual", construction plans and hydraulic calculations for an irrigation system meeting the requirements of these regulations shall be submitted to PCU for approval for reclaimed water distribution systems, where required for new subdivisions and other new developments. The plans and calculations shall be prepared by a professional engineer licensed in the State of Florida and shall comply with the provisions of the "Utilities Standards and Specifications Manual". FDEP construction permits, if applicable under current regulations, will be required for installation of reclaimed water distribution systems.

4.5 Limitations of Use

A. Use of reclaimed water shall be limited to irrigation of residential lawns, golf courses, cemeteries, parks, greenways, common areas, open spaces, landscaped areas, decorative water features, highway medians, rights-of-ways, and other similar areas which the developer or user plans to irrigate; or other uses specifically approved by PCU and allowed under Chapter 62-610, FAC.

B. Reclaimed water shall not be used inside any residential dwelling, or to fill swimming pools, hot tubs, spas, or wading pools or other open waters where human contact or immersion may occur.

C. Reclaimed water shall not be applied to areas within 100 feet of any public outdoor eating, drinking, or bathing facility, unless aerosol formation is minimized.

D. Reclaimed water shall not be applied to impervious surfaces that allow drainage to surface waters.

E. Detailed limitations governing the use of Reclaimed Water are contained in the "Reclaimed Water Use Acknowledgment and Application," that is located in the "Utilities Administration Manual."

F. Reclaimed water shall not be utilized for toilet flushing or fire suppression except in extreme emergency situations as required by the Fire Marshall and approved by PCU in accordance with Chapter 62-610.476, FAC.

G. Reclaimed water is considered a valuable water resource and shall be protected from inefficient use at all times and over-utilization during periods of water shortage under the ordinances and policies adopted by the COUNTY.

4.6 Discontinuance of Service

PCU may discontinue reclaimed water service to any customer due to a violation of the provisions of this MANUAL or other COUNTY regulations, for non-payment of bills, for tampering with any service, for plumbing cross-connections with another water source, for acts detrimental to the system, or for the convenience of PCU. PCU has the right to cease service until the condition is corrected and all costs due PCU are paid. These costs may include delinquent billings and payment for any damage caused to the system. Should discontinued service be reconnected without authorization, then PCU shall remove the service and make such additional charges as are established by the COUNTY.

Reconnection of a reclaimed water system to a potable water system shall not be allowed except in extreme cases where PCU has made non-potable water service no longer available and there is a clear and necessary justification for doing so.

5.0 INSTALLATION OF IRRIGATION SYSTEMS

5.1 General

A. All construction of reclaimed water facilities shall be in conformance with the "Utilities Standards and Specifications Manual".

B. Wells connected to existing irrigation systems shall be disconnected prior to connection to the reclaimed water system, except as specified in Section 4.3 of this MANUAL and in the "Reclaimed Water Use Acknowledgment and Application," located in the "Utilities Administration Manual".

C. Existing irrigation systems shall be disconnected from potable water systems prior to connection to the reclaimed water system.

D. Irrigation systems for single family residential customers shall be in-ground fully automatic type irrigation systems. Hose bibs or other hand operated irrigation devices shall not be present on irrigation systems connected to the reclaimed water system.

E. Irrigation systems for multi-family residential customers shall be in-ground irrigation systems. Hose bibs or other hand operated irrigation devices shall not be present on irrigation systems connected to the reclaimed water system.

F. Reclaimed water meter boxes and valve boxes shall be of the size and design required by PCU and shall meet the labeling specifications in accordance with the "Utilities Standards and Specifications Manual".

G. Detailed requirements are contained in the "Reclaimed Water Use Acknowledgment and Application," located in the "Utilities Administration Manual".

5.2 Public Right-of-Way or Polk County Utilities Easements

No reclaimed water facilities will be accepted by PCU unless they are installed in a dedicated public right-of-way or approved Polk County Utilities Easement, in accordance with the "Utilities Standards and Specifications Manual". Any new easement shall be adequately sized to accommodate construction and maintenance of any new reclaimed water system component.

5.3 Cross Connection Control

An approved testable cross connection control assembly shall be installed on the potable water supply to a property at the property at the property owner's or customer's expense prior to connection to the reclaimed water system, in accordance with the "Cross-Connection Control Policy Manual".

On new potable water service installations, PCU shall install as part of the service connection the necessary approved cross connection control assembly. In addition, an approved cross connection control assembly shall be installed on the customer's irrigation system immediately downstream of the service connection at the property owner's or customer's expense to prevent the return of reclaimed water to PCU's distribution system through backflow or back siphonage. Installation, operation, maintenance, and inspection of cross connection control assembly shall be in accordance with the "Cross Connection Control Policy Manual" and other applicable COUNTY regulations.

5.4 Color-Coding and Tagging

All reclaimed water air release and blow off assemblies shall be appropriately tagged or labeled with the words in English and Spanish: "Do Not Drink," together with the equivalent standard international symbol to warn the public and employees that the water is not intended for drinking. All mains, tubing, valve covers, and meters shall be color coded using Pantone

Purple 522C, or otherwise marked, to differentiate reclaimed water from domestic or other water. Irrigation piping shall be purple in color or color coded using Pantone Purple 522C paint applied to the exterior top of the piping. Individual residential service connections shall consist of a lockable curb-stop connection and shall be located in a purple meter box on the opposite property corner from the potable water service connection. The lid of the reclaimed water meter box shall be labeled bearing the words in English and Spanish: "Do Not Drink," together with the equivalent standard international symbol.

Underground pipe which is not manufactured of metallic materials shall be color coded for reclaimed water transmission and distribution systems using Pantone Purple 522C with light stable colorants. Underground metallic pipe shall be color coded or marked using purple as a prominent color. If tape is used to mark the pipe, the tape shall be permanently affixed along the axis of the pipe. Visible, above ground portions of the reclaimed water transmission and distribution system shall be clearly color coded or marked using purple as a prominent color. Materials and installation shall be in accordance with the "Utilities Standards and Specifications Manual".

5.5 Advisory Signs

The public shall be notified of the use of reclaimed water by the customer. This shall be accomplished by the posting of advisory signs designating the nature of the reclaimed water project where reuse is practiced. Advisory signs shall include the following text in English and Spanish: "Do Not Drink," together with the equivalent standard international symbol, and shall use purple as a prominent color as graphically specified within the "Utilities Standards and Specifications Manual". Advisory signs shall be posted at the following locations where reclaimed water is used:

A. Adjacent to lakes or ponds used to store reclaimed water not located at the wastewater treatment facility, including golf course irrigation ponds. Advisory signs posted adjacent to ponds shall include the following text in English and Spanish: "Do Not Drink" and "Do Not Swim" together with the equivalent international symbols;

B. At the 1st and 10th tees of golf courses;

C. Adjacent to decorative water features using reclaimed water, such as waterfalls or fountains. Advisory signs posted adjacent to decorative water features shall include the following text in English and Spanish: "Do Not Drink" and "Do Not Swim" together with the equivalent international symbols;

D. At each entrance to residential neighborhoods using reclaimed water;

E. Along medians and rights-of-way where reclaimed water is used that are located outside residential neighborhoods; and

F. At each entrance to parks, playgrounds, cemeteries, common areas, and schools using reclaimed water.

6.0 INSPECTIONS

Pursuant to Chapter 62-610.469(7)(h), FAC, in order to verify proper connections, monitor proper use of reclaimed water, and minimize the potential for cross-connections, PCU will inspect the customer's irrigation system at the time of connection to the reclaimed water system and periodically thereafter, as specified in the "Cross Connection Control Policy Manual". Exception may be made only for new irrigation systems installed by professional irrigation system installers at unoccupied dwellings under construction as outlined in the paragraph below.

For developers, contractors, and/or builders who wish to have temporary access to the reclaimed water supply for the purpose of installing, flushing and testing of new irrigation systems and/or to irrigate landscaping at unoccupied dwellings under construction, the following procedures and conditions apply:

A. The builder/contractor will apply for reclaimed water service via the form provided by PCU for that purpose as specified in the "Utilities Administration Manual" at the same time application is made for the potable water meter set.

B. PCU will set the reclaimed water meter and lock it off using a special lock.

C. PCU will provide key(s) for the special locks to the construction superintendent on the job who is responsible for construction of the dwelling.

D. The construction superintendent or developer shall assume responsibility for the control of the reclaimed water meter connection and shall agree to the following conditions, by means of a signed and dated form entitled "Reclaimed Water Use Acknowledgement and Application," located in the "Utilities Administration Manual".

1. The new irrigation system will be constructed in accordance with applicable rules and regulations including, but not limited to:

   a) Hose bibs, faucets, or other connections that could permit usage of reclaimed water for any other purpose than to supply in-ground irrigation systems are not allowed.

   b) Irrigation systems may not be connected to any other source of water, including public or private potable water systems, lakes, streams, ponds, or private wells (potable or non-potable), etc. Interconnections to neighboring irrigation systems are not allowed unless approved specifically in writing by PCU.

c) The irrigation system must be maintained in good working condition and must be adjusted properly to minimize spray onto roads, common sidewalks (pivoting sprinkler heads may **NOT** be installed between sidewalks and street curbs), gutters, neighboring property, or impervious surfaces that allow run-off. Over spray into swimming or wading pools is not allowed.

2. Only PCU, the construction superintendent, and the professional irrigation system installer under the superintendent's supervision shall have access to the reclaimed water meter connection.

3. Reclaimed water may **only** be used for construction, flushing, and testing of new irrigation systems at unoccupied dwellings under construction until such time as PCU conducts the initial inspection/activation.

4. The construction superintendent shall lock off the reclaimed water meter, using the same special lock, immediately upon completion of the irrigation system installation and shall call or fax PCU for the initial inspection/activation.

5. The construction superintendent shall send, on Friday of each calendar week via fax to PCU, a list of street addresses of dwelling construction sites in the PCU reclaimed water service areas where irrigation systems are scheduled for installation during the following week. In the absence of a street address in a new development, the construction superintendent may identify the location by subdivision name, phase, and lot number.

6. PCU will conduct the initial inspection and activation within one calendar week after notification by the construction superintendent that the irrigation system installation is complete.

7.0 OWNERSHIP AND MAINTENANCE RESPONSIBILITY

7.1 PCU Responsibilities

A. PCU shall own and maintain all reclaimed water transmission and distribution systems within the public right-of-way and public easements.

B. PCU will make a reasonable effort to inspect and maintain its reclaimed water system in good repair, but assumes no liability for any damage caused by the system that is beyond the control of normal maintenance.

C. Production of reclaimed water is a function of wastewater treatment facility operational criteria and is controlled by PCU. PCU reserves the right to limit availability during

certain hours, to temporarily shut off the system without notice for repairs, maintenance or operational reasons, and to limit supply quantities.

7.2 Customer Responsibilities

A. The property owner will be responsible for maintenance of the irrigation system on his property downstream (customer side) from the service connection.

B. The property owner and/or customer shall be responsible for the operation of his reclaimed water irrigation system to prevent ponding or run-off from the irrigated area.

C. The property owner and/or customer shall be responsible for the maintenance of all irrigation lines and appurtenances on the property served by PCU. PCU reserves the right to disconnect the service to any property when the irrigation system and appurtenances are not properly maintained. In addition, should the customer require reclaimed water at different pressures, or different quality, or in any way different from that normally supplied by PCU, he shall be responsible for the necessary devices to make these adjustments and for obtaining approval by PCU.

D. The property owner and/or customer shall be responsible for obtaining and adhering to the irrigation restrictions established for reclaimed water by and for the county. This information is available on the Polk County Board of County Commissioners' website (www.polk-county.net/utilities.aspx).

The Polk County Year-Round Water Conservation Measures and Water Shortage Ordinance (04-07) has established that the water conservation measures or water shortage orders adopted by the Southwest Florida Water Management District applicable to Polk County, or any portion thereof, shall be subject to enforcement action. The Ordinance provides that the measures or orders for the use of groundwater or other water resources that are regulated by the water management districts are applicable to the use of reclaimed water, unless specifically relaxed under the provisions of Section 4 of the Ordinance.

Polk County Utilities, Florida

INDUSTRIAL WASTEWATER PRETREATMENT POLICY MANUAL

Utilities Code Reference Manual 6(E)

Polk County Board of County Commissioners

Bob English	Melony Bell	Ed Smith	Todd Dantzler	Sam Johnson
District 1	District 2	District 3	District 4	District 5

Jim Freeman	Bill Beasley, PE	Gary Fries, PE
County Manager	Deputy County Manager	Utilities Director

December 2010

(Reference Manual Update: December 2012)

INDUSTRIAL WASTEWATER PRETREATMENT POLICY MANUAL

December 2010

1.0 GENERAL PROVISIONS

1.1 Purpose

This MANUAL sets forth uniform program and policy requirements for customers/users of the wastewater treatment facilities (WWTF) of Polk County Utilities (PCU). This MANUAL shall enable PCU to comply with all applicable Federal and State laws, including the Clean Water Act (33 United States Code 1251 *et seq*.), the General Pretreatment Regulations (40 CFR Part 403), Chapter 403, Florida Statues (FS), and 62-625 Florida Administrative Code (FAC). The objectives of this MANUAL are:

(A) To prevent the introduction into the WWTF any pollutants which will interfere with the operation of the system or contaminate the resulting residuals;

(B) To prevent the introduction of pollutants into the WWTF's which will pass through the system, inadequately treated, into receiving waters or the atmosphere, or otherwise be incompatible with the system;

(C) To insure the quality of the treated wastewater and residuals in order to provide high quality products of reuse and recycling in compliance with applicable regulations;

(D) To promote the beneficial reuse and recycling of treated wastewater and residuals in order to conserve water;

(E) To provide for fees for the equitable distribution of the costs of operation, maintenance, and improvement of PCU's WWTF, and the implementation of an approved pretreatment program as required in 62-650 FAC and other applicable State and Federal statues and regulations.

(F) To enable PCU to comply with permit conditions, residuals use and disposal regulations, reuse regulations, and any other Federal and State laws to which PCU is subject.

This MANUAL authorizes the issuance of wastewater discharge permits; provides for monitoring, compliance, and enforcement activities; establishes administrative review procedures; requires user reporting; and provides for the equitable distribution of costs resulting from the MANUAL established herein.

1.2 Applicability

This MANUAL shall apply to all existing and future customers/users of the WWTF owned by PCU. In addition, this MANUAL shall apply to customers/users of the PCU Wastewater System, including those users who are customers of another utility but whose building sewer

is connected to any portion of the PCU WWTF. As a minimum, all developments shall comply with the provisions of the Utilities Standards and Specifications Manual and the Land Development Code.

1.3 Administration

Except as otherwise provided for, PCU shall administer, implement, and enforce the provisions of this MANUAL. Any powers granted to or duties imposed upon the PCU Director may be delegated by the Director to other County personnel. PCU will promulgate and maintain current specific implementation procedures for this MANUAL and for the ancillary Fats, Oil and Grease (FOG) Program.

1.4 Abbreviations

The following abbreviations, when used in this MANUAL, shall have the designated meanings given below:

BOD:	Biochemical Oxygen Demand
CFR:	Code of Federal Regulations
COD:	Chemical Oxygen Demand
FAC:	Florida Administrative Code
FDEP:	Florida Department of Environmental Protection
FS:	Florida Statute
EPA:	Environmental Protection Agency
GPD:	Gallons per day
IU:	Industrial User
L:	Liter
Mg:	Milligram
Mg/L:	Milligrams per liter
MIU:	Minor Industrial User
NPDES:	National Pollutant Discharge Elimination System
O&M:	Operation and Maintenance
PCU:	Polk County Utilities
SIC:	Standard Industrial Classification
TSS:	Total Suspended Solids
WWTF:	Wastewater Treatment Facility

1.5 Definitions

The following terms and phrases, as used in this MANUAL, shall have the meanings hereinafter designated, unless context clearly changes the meaning or unless a provision explicitly states otherwise.

ACT OR "THE ACT": the Federal Water Pollution Act, also known as the Clean Water Act, as amended, 33 U.S.C. 1251 *et seq.*

APPROVAL AUTHORITY: the Florida Department of Environmental Protection (FDEP) or its successor agency.

AUTHORIZED REPRESENTATIVE OF INDUSTRIAL USER (IU): any of the below:

(A) A principal executive officer of at least of the level of vice president, if the IU is a corporation;

(B) A general partner or proprietor if the IU is a partnership or proprietorship, respectively; or

(C) A duly authorized representative of the individual designated above if such representative is responsible for the overall operation of the facilities discharging to the WWTF.

BIOCHEMICAL OXYGEN DEMAND: the quantity of oxygen utilized in the biochemical oxidation of organic matter under standard laboratory procedure, five calendar days at 20 degrees centigrade expressed in terms of weight and concentration [milligrams per liter (mg/L)].

BOARD: the Polk County Board of County Commissioners.

BUILDING SEWER: a sewer conveying wastewater from the premises of a customer/user to the WWTF.

BYPASS: the international diversion of wastewater streams from any portion of an IU's treatment facility.

CATEGORICAL STANDARDS: National Categorical Pretreatment Standards or Pretreatment Standards.

CHEMICAL OXYGEN DEMAND: a measure of the oxygen consuming capacity of organic matter present in wastewater, expressed as the amount of oxygen consumed from a chemical oxidant during a specific test, in mg/L.

COLOR: the optical density at the visual wave length of maximum absorption, relative to distilled water. One hundred percent (100%) transmittance is equal to zero (0.0) density.

COMPOSITE SAMPLE: the sample resulting form the combination of individual wastewater samples taken at selected intervals based on increments of either flow or time or both.

CONTROL AUTHORITY: the "Approval Authority" defined above or the PCU Director at such time that PCU has an approved Pretreatment Program under the provisions of 62-625 FAC.

COOLING WATER: the water discharged from any use such as air conditioning, cooling or refrigeration, or to which the only pollutant added is heat.

COUNTY: the Polk County Board of County Commissioners.

CUSTOMER/USER: any person or entity that contributes or causes the contribution of wastewater into the PCU WWTF.

DIRECT DISCHARGE: the discharge of treated or untreated wastewater directly to the waters of the State of Florida, or the waters of the United States.

DIRECTOR: the person who is responsible for the day to day administration and management of Polk County Utilities.

DISCHARGE: the introduction of pollutants into a WWTF from any nondomestic source regulated under Chapter 403, FS.

ENVIRONMENTAL PROTECTION AGENCY (EPA): the U.S. Environmental Protection Agency, or where appropriate, the term may also be used as a designation for the Administrator or other duly authorized official of the EPA.

GRAB SAMPLE: a sample that is taken from a wastestream on a one-time basis with no regard to flow or time.

HOLDING TANK WASTE: any waste from holding tanks such as vessels, chemical toilets, campers, trailers, septic tanks, and vacuum-pump tank trucks.

INDIRECT DISCHARGE: the discharge or the introduction of nondomestic pollutants from any sources regulated under Section 307(b) or (c) of the Act, (33 U.S.C. 1317), into the WWTF (including holding tank waste discharged into the system).

INDUSTRIAL USER (IU): a source of discharge.

INDUSTRIAL WASTES: the liquid wastes from industrial or manufacturing processes, or from a trade or business as contrasted with domestic waste.

INTERFERENCE: a discharge that, alone or in conjunction with a discharge or discharges from other sources, both:

INDUSTRIAL WASTEWATER PRETREATMENT POLICY MANUAL

(A) Inhibits or disrupts the WWTF, its treatment processes or operations, or its domestic wastewater residuals processes, use or disposal; and

(B) Is a cause of a violation of any requirement of the WWTF permit (including an increase in the magnitude or duration of a violation) or prevents use or disposal of domestic wastewater residuals in compliance with local regulations or rules of the FDEP and Chapter 403, FS.

LOCAL LIMITS: site specific perimeters based on the efficiency of the receiving WWTF in treating wastes, the WWTF's history of compliance with its NPDES permit limits, the condition of the water body that receives the WWTF's treated effluent, any water quality standards that are applicable to the water body receiving the WWTF's effluent, the receiving WWTF's retention, use, and disposal of sewage sludge, and worker health and safety concerns.

MAY: is permissive.

MEASUREMENT: the ability of the analytical method or protocol to quantify, as well as identify, the presence of the substance in question.

MEDICAL WASTE: isolation wastes, infectious agents, human blood and blood products, pathological wastes, sharps, body parts, contaminated bedding, surgical wastes, potentially contaminated laboratory wastes, and dialysis wastes.

NATIONAL CATEGORICAL PRETREATMENT STANDARD OR PRETREATMENT STANDARD: any regulation containing pollutant discharge limits promulgated by the EPA in accordance with Section 307 (b) and (c) of the Act (33U.S.C.1347) which applies to a specific category of IU.

NATIONAL POLLUTION DISCHARGE ELIMINATION SYSTEM (NPDES) PERMIT: a permit issued pursuant to Section 402 of the Act (33 U.S.C. 1342).

NEW SOURCE:

(A) Any building, structure, facility or installation from which there is or may be a discharge, the construction of which commenced after the publication of proposed pretreatment standards under Section 307 (c) of the CWA which will be applicable to such source if such standards are thereafter promulgated in accordance with that Section, provided that:

1. The building, structure, facility or installation is constructed at a site at which no other source is located;

2. The building, structure, facility or installation totally replaces the process or production equipment that causes the discharge of pollutants at an existing source; or

3. The production or wastewater generating processes of the building, structure, facility or installation are substantially independent of an existing source at the same site. In determining whether these are substantially independent, factors such as the extent to which the new facility is integrated with the existing plant, and the extent to which the new facility is engaged in the same general type of activity as the existing source shall be considered;

(B) Construction on a site at which an existing source is located results in a modification rather than a new source if the construction does not create a new building, structure, facility or installation meeting the criteria of (A)(2) or (A)(3) above but otherwise alters, replaces, or adds to existing process or production equipment; or

(C) Construction of a new source, as defined herein, has commenced if the owner or operator has;

1. Begun, or caused to begin as part of a continuous onsite construction program:

   (a) Any placement, assembly, or installation of facilities or equipment, or

   (b) Significant site preparation work including clearing, excavation, or removal of existing buildings, structures, or facilities which is necessary for the placement, assembly, or construction of new source facilities or equipment; or

2. Entered into a binding contractual obligation for the purchase of facilities or equipment that is intended to be used in its operation within a reasonable time. Options to purchase or contracts that can be terminated or modified without substantial loss, and contracts for feasibility, engineering, and design studies do not constitute a contractual obligation under this rule.

PASS THROUGH: a discharge which exists the WWTF into waters of the State or United States, or into ponds, rapid infiltration basins (RIBS), artificial wetlands, or other bodies of water used by PCU for effluent disposal in quantities or concentrations which, alone or in conjunction with a discharge or discharges from other sources, is a cause of a violation of any requirement of the WWTF's permit (including an increase in the magnitude or duration of a violation).

PERSON: any individual, partnership, co-partnership, firm, company, corporation, association, joint stock company, trust, estate, governmental entity, or any other legal entity; or their legal representatives, agents or assigns. This definition includes all Federal, State, and local government entities.

INDUSTRIAL WASTEWATER PRETREATMENT POLICY MANUAL

pH: the logarithm (base 10) of the reciprocal of the concentration of hydrogen ions expressed in grams per liter of solution.

POLLUTANT: dredged spoil, solid waste, incinerator residue, filter backwash, sewage, garbage, sewage sludge, munitions, medical wastes, chemical wastes, biological materials, radioactive materials, heat, wrecked or discarded equipment, rock, sand, cellar dirt, municipal, agricultural and industrial wastes, and certain characteristics of wastewater (e.g., pH, temperature, TSS, turbity, color, BOD, COD, toxicity, or odor).

POLLUTION: the man-made or induced alteration of the chemical, physical, biological, and radiological integrity of water.

POLK COUNTY UTILITIES (PCU): the Polk County entity which has the responsibility of administering, operating, and maintaining the potable water, wastewater, and reclaimed water facilities and infrastructure owned and/or operated by the County.

PRETREATMENT: the reduction of the amount of pollutants, the elimination of pollutants, or the alteration of the nature of pollutant properties in wastewater prior to or in lieu of discharging or otherwise introducing such pollutants into a WWTF. The reduction or alteration may be obtained by physical, chemical, or biological processes, process changes or by other means, except as prohibited by Rule 62-625.410(5), FAC. Appropriate pretreatment technology includes control equipment, such as equalization tanks or facilities for protection against surges or slug discharges that might interfere with or otherwise be incompatible with the WWTF. However, where wastewater from a regulated process is mixed in an equalization facility with unregulated wastewater or with wastewater from another regulated process, the effluent from the equalization facility must meet an adjusted pretreatment limit calculated in accordance with Rule 62-625.410(6), FAC.

PRETREATMENT REQUIREMENT: any substantive or procedural requirement related to pretreatment, other than a pretreatment standard, imposed on an industrial user.

PRETREATMENT STANDARDS (STANDARDS): prohibited discharge standards, categorical pretreatment standards, and local limits.

PROHIBITED DISCHARGE STANDARDS (PROHIBITED DISCHARGES): absolute prohibitions against the discharge of certain substances; these prohibitions appear in Section 2.1 of this MANUAL.

REFERENCE MANUAL 6(A): the Polk County Utilities Administration Manual, adopted by reference herein.

REFERENCE MANUAL 6(B): the Polk County Utilities Standards and Specifications Manual, adopted by reference herein.

INDUSTRIAL WASTEWATER PRETREATMENT POLICY MANUAL

REFERENCE MANUAL 6(C): the Polk County Utilities Cross-Connection Control Policy Manual, adopted by reference herein.

REFERENCE MANUAL 6(D): the Polk County Utilities Reclaimed Water Policy Manual, adopted by reference herein.

REFERENCE MANUAL 6(E): this Manual, the Polk County Industrial Wastewater Pre-Treatment Policy Manual, adopted by reference herein.

REFERENCE MANUAL 6(F): the Polk County Utilities Water Conservation Policy Manual, adopted by reference herein.

REFERENCE MANUAL 6(G): the Polk County Utilities Fats, Oils, and Grease Policy Manual, adopted by reference herein.

REMOVAL: a reduction in the amount of a pollutant in a WWTF's effluent or alteration of the nature of a pollutant during treatment at the WWTF. The reduction or alteration can be obtained by physical, chemical, or biological means and may be the result of specifically designed WWTF capabilities or may be incidental to the operation of the treatment system. Removal as used in this MANUAL shall not mean dilution of a pollutant in the WWTF.

RESPONSIBLE CORPORATE OFFICER:

(A) A president, secretary, treasurer, or vice president of the corporation in charge of a principal business function, or any other person who performs similar policy or decision-making functions for the corporation; or

(B) The manager of one or more manufacturing, production, or operation facilities employing more than 250 persons or having gross annual sales or expenditures exceeding $65 million (in second-quarter 2008 dollars), if authority to sign documents has been assigned or delegated to the manager in accordance with corporate procedures.

SEVERE PROPERTY DAMAGE: substantial physical damage to property, damage to an IU's treatment facilities that causes them to become inoperable, or substantial and permanent loss of natural resources that can reasonably be expected to occur in the absence of a bypass. Severe property damage does not mean economic loss caused by delays in production.

SHALL: mandatory.

INDUSTRIAL WASTEWATER PRETREATMENT POLICY MANUAL

SEWAGE: human excrement and gray water (household showers, dishwashing operations, etc.)

SIGNIFICANT INDUSTRIAL USER:

(A) All IUs subject to categorical pretreatment standards under Rule 62-625.410, FAC, and 40 CFR Chapter I, Subchapter N which has been adopted by reference in Chapter 62-660, FAC; and

(B) Any other IU that discharges an average of 25,000 GPD or more of process wastewater to the WWTF (excluding domestic wastewater, noncontact cooling and boiler blow-down wastewater); contributes a process wastestream which makes up 5 percent or more of the average dry
weather hydraulic or organic capacity of the treatment plant; or is designated as such by the control authority on the basis that the industrial user has a reasonable potential for adversely affecting the WWTF's operation or for violating any pretreatment standard or requirement in accordance with Rule 62-625.500 (2) (e), FAC.

Upon finding that an IU meeting the criteria in (B) above has no reasonable potential for adversely affecting the WWTF's operation for violating any pretreatment standard or requirement, the control authority may at any time, on its own initiative or in response to a petition received from an IU, and in accordance with Rule 62-625.500 (2) (e), FAC, determine that such IU is not a significant IU.

SIGNIFICANT NONCOMPLIANCE (SNC): a significant violation or patterns of violations.

SLUG DISCHARGE: any discharge of a non-routine, episodic nature.

STATE: the State of Florida.

STORMWATER: any flow occurring during or following any form of natural precipitation and resulting there from.

TOTAL NITROGEN: the total quantity of nitrogen in the forms of organic nitrogen, ammonia, nitrite and nitrate as determined by standard analytical methods, expressed in milligrams per liter.

TOTAL SUSPENDED SOLIDS (TSS): solids that either float on the surface of or are suspended in water, wastewater or other liquids, which are removable by laboratory filtering expressed in mg/L.

TOXIC POLLUTANT: any pollutant or combination of pollutants listed as toxic in regulations promulgated by the Administrator of the EPA under the provision of CWA 307 (a) or other acts.

TREATMENT PLANT: that portion of the WWTF designed to provide treatment to wastewater.

UPSET: an exceptional incident in which there is unintentional and temporary noncompliance with categorical pretreatment standards because of factors beyond the reasonable control of the IU.

USER/CUSTOMER: any person who contributes or causes the contribution of wastewater into the WWTF.

USER FEE SCHEDULE: the reasonable rates and fees established by a separate Board approved Resolution so that PCU is reimbursed the costs of administering this MANUAL.

WASTEWATER: the liquid and water-carried industrial or domestic wastes from dwellings, commercial buildings, industrial facilities, and institutions, together with such groundwater, surface water, and stormwater as may inadvertently be present, whether treated or untreated, which is contributed into or permitted to enter the WWTF.

WASTEWATER TREATMENT FACILITY (WWTF): a treatment works as defined by Section 212 of the Act (33 U.S.C. 1292), which is owned in this instance by PCU. This definition includes any sewers that convey wastewater to the WWTF, but does not include pipes, sewers, or other conveyances not connected to a facility providing treatment. For the purposes of this MANUAL, "WWTF" shall also include any sewers that convey wastewaters to the WWTF from persons outside the jurisdiction of Polk County who are, by contract or agreement with PCU, customers/users of the PCU WWTF.

WATER QUALITY STANDARDS: a numerical limit determined by the State which all direct, point source, discharges into waters of the State must meet.

2.0 GENERAL SEWER USE REQUIREMENTS

2.1 Prohibited Discharge Standards

(A) General Prohibitions: No user shall introduce or cause to be introduced into the WWTF any pollutant or wastewater which causes pass through or interference. Pollutants, substances, or wastewater prohibited by this Section shall not be processed or stored in such a manner that they could be discharged to the WWTF. These general prohibitions apply to each IU of the WWTF whether or not they are

subject to categorical pretreatment standards or any other Federal, State, or local pretreatment standards or requirements.

(B) Specific Prohibitions: No user shall introduce or cause to be introduced into the WWTF the following pollutants, substances, or wastewater:

1. Pollutants that create a fire or explosive hazard in the WWTF, including, but not limited to, waste streams with a closed-cup flashpoint of less than 140 degrees F (60 degrees C) using the test methods specified in 40 CFR 261.21;

2. Wastewater having a pH less than 5.0 or greater than 9.5 or otherwise causing corrosive structural damage to the WWTF or equipment;

3. Solid or viscous substances in amounts that will cause obstruction of the flow in the WWTF resulting in interference;

4. Pollutants, including oxygen-demanding pollutants (BOD, COD, etc), released in a discharge at a flow rate and/or pollutant concentration which, either singly or by interaction with other pollutants, will cause interference with the WWTF;

5. Heat in amounts which will inhibit biological activity in the WWTF resulting in interference, but in no case wastewater which causes the temperature at the introduction to the treatment plant to exceed 104 degrees F (40 degrees C);

6. Petroleum oil, non-biodegradable cutting oil, or products of mineral oil origin, in amounts that will cause interference or pass through;

7. Pollutants which result in the presence of toxic gases, vapors, or fumes within the WWTF in a quantity that may cause acute worker health and safety problems;

8. Trucked or hauled pollutants, except at discharge points and times designated by PCU in accordance with Section 3.4 of this MANUAL;

9. Noxious or malodorous liquids, gases, solids, or other wastewater which, either singly or by interaction with other wastes, are sufficient to create a public nuisance or hazard to life, or to prevent entry into the sewers for maintenance or repair;

10. Wastewater which imparts color which can not be removed by the treatment process, such as, but not limited to, dye wastes and vegetable tanning solution, which consequently imparts color to the treatment plant's effluent;

11. Wastewater containing any radioactive wastes or isotopes except in compliance with applicable Federal or State regulations;

INDUSTRIAL WASTEWATER PRETREATMENT POLICY MANUAL

12. Stormwater, surface water, ground water, artesian well water, roof runoff, subsurface drainage, condensate, deionized water, noncontact cooling water, and unpolluted wastewater, unless specifically authorized by PCU;

13. Sludges, screenings, or other residues from the pretreatment of industrial wastes;

14. Medical wastes, except as specifically authorized by PCU in a wastewater discharge permit;

15. Wastewater causing, alone or in conjunction with other sources, the treatment plant's effluent to fail a toxicity test;

16. Detergents, surface-active agents, or other substances which may cause excessive foaming in the WWTF; or

17. Hazardous waste under 40 CFR Part 261, in any amount.

2.2 National Categorical Pretreatment Standards

The categorical pretreatment standards found at 40 CFR Chapter I, Subchapter N, Parts 405-471, and adopted by reference in Chapter 62-660, FAC, are hereby incorporated.

(A) Where a categorical pretreatment standard is expressed only in terms of either the mass or the concentration of a pollutant in wastewater, PCU may impose equivalent concentration or mass limits in accordance with 62-625.410(4)(b), FAC.

(B) When wastewater subject to categorical pretreatment standard is mixed with wastewater not regulated by the same standard, the Director shall impose an alternate limit using the combined wastestream formula in 62-625.410(6), FAC.

(C) An IU may obtain a variance from a categorical pretreatment standard if the user can prove, pursuant to the procedural and substantive provisions in 62-625.700, FAC, that factors relating to its discharge are fundamentally different from the factors considered when developing the categorical pretreatment standard applicable to that IU and further, that the existence of those factors justifies a different discharge limit than specified in the applicable categorical pretreatment standard.

2.3 State Pretreatment Standards

State pretreatment standards located at 62-625.410 FAC, and any and all pretreatment standards that may be adopted by the State are hereby incorporated.

2.4 Local Limits

Local pollutant limits are established to protect against pass through and interference from IUs utilizing each individual receiving WWTF. No person shall discharge wastewater containing in excess of these local instantaneous maximum allowable discharge limits. Local limits apply at the point where the wastewater is discharged to the receiving WWTF. PCU has completed a Local Limits Needs Assessment. Based on evaluation of the technical data contained within this Needs Assessment, PCU has determined there is currently no existing requirement for imposing Local Limits. PCU shall perform Local Limits Needs Assessments periodically as needed in order to determine whether Local Limits should be established.

2.5 Right of Revision

Polk County reserves the right to establish, by ordinance or in wastewater discharge permits, more stringent standards or requirements on discharges to the WWTF.

2.6 Dilution

No user shall ever increase the use of process water, or in any way attempt to dilute a discharge, as a partial or complete substitute for adequate treatment to achieve compliance with a discharge limitation unless expressly authorized by an applicable pretreatment standard or requirement. PCU may impose mass limitations on users who use dilution to meet applicable pretreatment standards or requirements or in other cases when the imposition of mass limitations is appropriate.

2.7 Wastewater Constituent Limitations

(A) If any wastes are discharged, or proposed to be discharged, to a wastewater treatment plant which contain pollutants in excess of normal concentrations as defined in Paragraph B below, or possess characteristics which, in the judgment of PCU, may have a deleterious effect upon the wastewater treatment plant, or which otherwise create a hazard to life or constitute a public nuisance, the County may either alone or in combination:

1. refuse to accept the waste: or
2. require pretreatment to an acceptable condition for discharge to the wastewater treatment plant; or
3. require control over the quantities and rates or discharge; or
4. require payment of a surcharge to cover the added cost of handling and treating the wastes.

(B) Regular user charges shall apply to wastes that are at or below normal concentrations as follows:

1. BOD – 300 mg/L
2. Total Suspended Solids (TSS) – 300 mg/L
3. Nitrogen – 60 mg/L
4. Grease – 100 mg/L

(C) Determination of abnormal strength waste.

1. The Director of PCU or his designee may initiate the sampling and testing of wastewater of non-residential users at least once per year, and more frequently at his discretion. Such sampling and testing shall be at the expense of the user. The analytical results from said sampling shall be used to determine the strength of the waste and to determine the surcharge for the high strength waste. Additional sampling and testing may be conducted on the request and at the expense of the user, as detailed in Paragraph 2 below.
2. The strength of the wastewater determined as a result of said sampling and testing shall be averaged with the results of the last sample and test to determine the surcharge for high strength wastes. The results of the averaged samples shall be presumed to be the strength of the waste until the next sample. Where continuous sampling and testing (more frequently than once per month) methods are used, the results of the sampling and testing for a 3-month period shall be averaged to determine the strength of the waste for the 3-month period. The surcharge for high strength wastes shall be based on said results. Ideally, a monitor program for surcharge testing will include the collection and averaging of 24-hour time composite samples collected at least four times per year, except for those pollutant analyses requiring grab sampling methodology. This increased sampling and averaging described herein does not preclude the Director of PCU from assessing a surcharge based on the analytical results of a single, annual sample as detailed in Paragraph 1 above.
3. All measurements, tests, and analyses of the characteristics of waters and wastes to which reference is made in this Section shall be determined in accordance with the latest edition of "Standard Methods of the Examination of Water and Wastewater," published by the American Public Health Association, from suitable samples taken at a said control manhole. Sampling shall be carried out by customarily accepted methods to reflect the effect of constituents upon the sewerage works and to determine the existence of hazards to life, limb and property. The particular analysis involved will determine whether a 24 hours composite of all outfalls of a premise is appropriate whether a grab sample or other multiple samples should be taken.

(D) Surcharge for high-strength wastes formula.

1. Computation. The surcharge in dollars for BOD and TSS shall be computed by multiplying the total mg/L of BOD and Total Suspended Solids above 600 mg/L times the metered water used during the billing in millions of gallons times a treatment surcharge factor. The surcharge factor shall be derived annually from the following formula and shall be set forth in the schedule of fees:

$$\text{Surcharge factor} = \frac{\text{Cost of Treatment Per million Gallons}}{600}$$

Where costs of treatment per million gallons equals operational costs of PCU's wastewater treatment plant(s) for the preceding fiscal year (including pro rata administrative costs) divided by the total sewage flow through all plants in millions of gallons. Six hundred (600) equals maximum normal BOD plus Total Suspended Solids content expressed in milligrams per liter.

2. The surcharge in dollars for fats, waxes, grease, oils and solvent-soluble substances shall be computed on a basis of $0.02 per ppm over a maximum of 100 ppm.

3. The surcharge in dollars for nitrogen shall be computed on a basis of $0.02 per ppm over a maximum of 60 ppm.

(E) Samples shall be analyzed by a state certified or NELAC certified laboratory which is certified to perform the analysis for the analyte(s) of concern. Laboratory analytical work will be performed by the contract laboratory designated by PCU laboratory support contract. The associated costs for laboratory services shall be directly assessed to the customer. The customer can request that a split sample be drawn, provided that the customer ensures that split samples shall be analyzed by a state certified or NELAC certified laboratory which is certified to perform the analysis for the analyte(s) of concern.

(F) Fees, charges, surcharges, expenses, etc. referenced herein shall be assessed in accordance with below Section 12.2 of this MANUAL.

3.0 PRETREATMENT OF WASTEWATER

3.1 Pretreatment Facilities

Users shall provide wastewater treatment as necessary to comply with this MANUAL and shall achieve compliance with all categorical pretreatment standards, local limits, and the prohibitions set out in Section 2.1 of this MANUAL within the time limitations specified by the EPA, the State, or PCU, whichever is more stringent. Any facilities necessary for compliance shall be provided, operated, and maintained at the user's

expense. Detailed plans describing such facilities and operating procedures shall be submitted to PCU for review in accordance with the provisions of Reference Manual 6(A), and shall be acceptable to PCU before such facilities are constructed. The review of such plans and operating procedures shall in no way relieve the user of the responsibility of modifying such facilities as necessary to produce a discharge acceptable to PCU under the provisions of this MANUAL.

3.2 Additional Pretreatment Measures

(A) Whenever deemed necessary, PCU may require users to restrict their discharge during peak flow periods, designate that certain wastewater be discharged only into specific sewers, relocate and/or consolidate points of discharge, separate sewage waste streams from industrial waste streams, and impose other such conditions as may be necessary to protect the WWTF and determine the user's compliance with the requirements of this MANUAL.

(B) PCU may require any person discharging into the WWTF to install and maintain, on their property and at their expense, a suitable storage and flow-control facility to ensure equalization of flow. A wastewater discharge permit may be issued solely for flow equalization.

(C) Users with the potential to discharge flammable substances may be required to install and maintain an approved combustible gas detection meter.

(D) Grease, oil, and sand interceptors shall be provided when they are deemed necessary by PCU for the proper handling of wastewater containing excessive amounts of grease and oil, or sand; except that such interceptors shall not be required for residential users. All interception units shall be of a type and capacity approved by PCU and in accordance with Reference Manual 6(C) and shall be so located to be easily accessible for cleaning and inspection. Such interceptors shall be inspected, cleaned, and repaired regularly, as needed, by the user at the user's expense. Maintenance and cleaning records of such interceptors shall be kept and made available upon request to PCU for a minimum of three (3) calendar years. Specific provisions of the PCU Fats, Oil and Grease Program are contained in the Industrial Pretreatment Program Implementation Procedures.

3.3 Accidental Discharge/Slug Control Plans

At least once every two years, PCU shall evaluate whether each significant industrial user needs an accidental discharge/slug control plan. PCU may require any user to develop, submit for approval, and implement such a plan. An accidental discharge/slug discharge plan shall address, at a minimum the following:

(A) Description of discharge practices, including non-routine batch discharges;

(B) Description of stored chemicals;

(C) Procedures for immediately notifying PCU of any accidental or slug discharge, as required by Section 5.6 of this MANUAL; and

(D) Procedures to prevent adverse impact from any accidental or slug discharge. Such procedures include, but are not limited to, inspection and maintenance of storage areas, handling and transfer of materials, loading and unloading operations, control of plant site runoff, worker training, building of containment structures or equipment, measures for containing toxic organic pollutants, including solvents, and/or measures and equipment for emergency response.

3.4 Hauled Wastewater

No person shall introduce into any PCU WWTF any water, wastewater, industrial wastewater, sewer cleaning residuals, septic or holding tank waste, or any other waste materials of any kind transported by truck or tanker to the WWTF. This provision does not include wastewater residuals or components transported from one PCU WWTF to another PCU WWTF for the purposes of further treatment or other purposes of PCU.

4.0 WASTEWATER DISCHARGE PERMITS

4.1 Wastewater Analysis

When requested by PCU, a user must submit information on the nature and characteristics of its wastewater within 30 calendar days of the request. PCU is authorized to prepare a form for this purpose and may periodically require users to update this information.

4.2 Wastewater Discharge Permit Requirement

(A) No significant IU shall discharge wastewater into the WWTF without first obtaining a wastewater discharge permit from PCU, except that a significant IU that has filed a timely application pursuant to Section 4.3 of this MANUAL may continue to discharge for the time period specified therein.

(B) PCU may require other users to obtain wastewater discharge permits as necessary to carry out the purposes of this MANUAL.

(C) Any violation of the terms and conditions of a wastewater discharge permit shall be deemed a violation of this MANUAL and subjects the wastewater discharge permittee to the sanctions set out in Section 8 through 10 of this MANUAL. Obtaining a wastewater discharge permit does not relieve a permittee of its obligation to comply with all Federal and State pretreatment standards or requirements or with any other requirements of Federal, State, and local law.

4.3 Wastewater Discharge Permitting for Existing Connections

Any user required to obtain a wastewater discharge permit who was discharging wastewater into the WWTF prior to the effective date of this MANUAL and who wishes to continue such discharges in the future, shall within 90 calendar days after said date, apply to PCU for a wastewater discharge permit in accordance with Section 4.5 of this MANUAL, and shall not cause or allow discharges to the WWTF to continue after 90 calendar days of the effective date of this MANUAL except in accordance with a wastewater discharge permit issued by PCU.

4.4 Wastewater Discharge Permitting for New Connections

Any user required to obtain a wastewater discharge permit who proposes to begin or recommence discharging into WWTF must obtain such permit prior to the beginning or recommencing of such discharge. An application for this wastewater discharge permit, in accordance with Section 4.5 of this MANUAL, must be filed at least 90 calendar days prior to the date upon which any discharge will begin or recommence.

4.5 Wastewater Discharge Permit Application Contents

All users required to obtain a wastewater discharge permit must submit a permit application. The following information shall be included as part of the application:

(A) All information required by Section 5.1 (B) of this MANUAL;

(B) Description of activities, facilities, and plant processes on the premises, including a list of raw materials, and chemicals used or stored at the facility which are, or could accidentally or intentionally be discharged to the WWTF;

(C) Number and type of employees, hours of operation, and proposed or actual hours of operation;

(D) Each product produced by type, amount, process or processes, and rate of production;

(E) Type and amount of raw materials processed (average and maximum per day);

(F) Site plans, floor plans, mechanical and plumbing plans, and details to show all sewers, floor drains, and appurtenances by size, location, and elevation, and all points of discharge;

(G) Time and duration of discharges; and

INDUSTRIAL WASTEWATER PRETREATMENT POLICY MANUAL

(H) Any other information as may be deemed necessary by PCU to evaluate the wastewater discharge permit application.

Inaccurate or incomplete applications will not be processed and will be returned to the user for revision.

4.6 Wastewater Signatories and Certification

All wastewater discharge permit applications and user reports must be signed by an authorized representative of the user and contain the following certification statement:

"I certify under penalty of law that this MANUAL and all attachments were prepared under my direction or supervision in accordance with a system designed to assure that qualified personnel properly gather and evaluate the information submitted. Based on my inquiry of the person or persons who manage the system, or those persons directly responsible for gathering the information, the information submitted is, to the best of my knowledge and belief, true, accurate, and complete. I am aware that there are significant penalties for submitting false information, including the possibility of fine and imprisonment for knowing violations."

4.7 Wastewater Discharge Permit Decisions

PCU will evaluate the data furnished by the user and may require additional information. Within 90 calendar days of receipt of a complete wastewater discharge permit application, PCU will determine whether or not to issue a wastewater discharge permit. PCU may deny any application for a wastewater discharge permit.

4.8 Wastewater Discharge Permit Duration

A wastewater discharge permit shall be issued for a specified time period, not to exceed five years from the effective date of the permit. A wastewater discharge permit may be issued for a period of less than five years, at the discretion of the Director. Each wastewater discharge permit will indicate a specific date upon which it will expire.

4.9 Wastewater Discharge Permit Contents

A wastewater discharge permit shall include each conditions as are deemed reasonably necessary by PCU to prevent pass through or interference, protect the quality of the water body receiving the treatment plant's effluent, protect the quality of effluent permitted for reuse, facilitate residuals management and disposal, and protect against damage to the WWTF.

(A) All wastewater discharge permits issued by PCU shall contain:

1. A statement that indicates wastewater discharge permit duration, which in no event shall exceed five years;

2. A statement that the wastewater discharge permit is non-transferable without prior notification to PCU in accordance with Section 4.12 of this MANUAL, and provisions for furnishing the new owner or operator with a copy of the existing wastewater discharge permit;

3. Effluent limitations based on applicable pretreatment standards in 62-625, FAC, national categorical pretreatment standards, local limits, and State and local law;

4. Self monitoring, sampling, reporting, notification, and record-keeping requirements. These requirements shall include an identification of pollutants to be monitored, sampling location, sampling frequency, and sample type based on Federal, State, and local law; and

5. A statement of civil and criminal penalties for violation of pretreatment standards and requirements, and any applicable compliance schedule. Such schedule shall not extend the time for compliance beyond that required by applicable Federal, State, or local law.

(B) Wastewater discharge permits may contain, but are not limited to, the following conditions:

1. Limits on the average and/or maximum rate of discharge, time of discharge, and/or requirements for flow regulation and equalization;

2. Requirements for the installation of pretreatment technology, pollution control, or construction of appropriate containment devices, designed to reduce, eliminate, or prevent the introduction of pollutants into the WWTF;

3. Requirements for the development and implementation of spill control plans or other special conditions including management practices necessary to adequately prevent accidental, unanticipated, or non-routine discharges;

4. Development and implementation of waste minimization plans to reduce the amount of pollutants discharged to the WWTF;

5. The unit charge or schedule of unit charges and fees for the management of the wastewater discharged to the WWTF;

6. Requirements for installation and maintenance of inspection and sampling facilities and equipment;

INDUSTRIAL WASTEWATER PRETREATMENT POLICY MANUAL

7. A statement that compliance with the wastewater discharge permit does not relieve the permittee of responsibility for compliance with all applicable Federal and State pretreatment standards, including those which become effective during the term of the wastewater discharge permit; and

8. Other conditions as deemed appropriate by PCU to ensure compliance with this MANUAL, and State and Federal laws, rules and regulations.

4.10 Wastewater Discharge Permit Appeals

PCU shall provide notice of the issuance of a wastewater discharge permit. Any person, including the user, may petition PCU to reconsider the terms of a wastewater discharge permit within 30 calendar days of notice of its issuance.

(A) Failure to submit a timely petition for review shall be deemed to be a waiver of the administrative appeal.

(B) In its petition, the appealing part must indicate the wastewater discharge permit provisions objected to, the reasons for this objection, and the alternative condition, if any, it seeks to place in the wastewater discharge permit.

(C) The effectiveness of the wastewater discharge permit shall not be stayed pending the appeal.

(D) If PCU fails to act within 30 calendar days, a request for reconsideration shall be deemed to be denied. Decisions not to reconsider a wastewater discharge permit, not to issue a wastewater discharge permit, or not to modify a wastewater discharge permit shall be considered final administrative actions for purposes of judicial review.

(E) Aggrieved parties seeking judicial review of the final administrative discharge decision must do so by filing a complaint with the Circuit Court for the County within 30 calendar days.

4.11 Wastewater Discharge Permit Modification

PCU may modify a wastewater discharge permit for good cause, including, but not limited to, the following reasons:

(A) To incorporate any new or revised Federal, State, or local pretreatment standards or requirements;

(B) To address significant alterations or additions to the user's operation, processes, or wastewater volume or character since the time of the wastewater discharge permit issuance;

(C) A change in the WWTF that requires either a temporary or permanent reduction or elimination of the authorized discharge;

(D) Information indicating that the permitted discharge poses a threat to the PCU WWTF, personnel, or the receiving waters;

(E) Violation of any terms or conditions of the wastewater discharge permit;

(F) Misrepresentations or failure to fully disclose all relevant facts in the wastewater discharge permit application or in any required reporting;

(G) Revision of or grant of variance from categorical pretreatment requirements pursuant to 62-625, FAC;

(H) To correct typographical or other errors in the wastewater discharge permit; or

(I) To reflect a transfer of ownership or operation to a new owner or operator, if the permit is transferable as provided in Section 4.12.

4.12 Wastewater Discharge Permit Transfer Restrictions

Wastewater discharge permits are issued to a specific IU for a specific operation. A wastewater discharge permit shall not be reassigned or transferred or sold to a new owner, new significant IU, different premises, or a new or changed operation without the express written approval of PCU. Transfers of wastewater discharge permits will only be considered if the following conditions are met:

(A) The permittee gives at least 90 calendar days advance written notice to PCU and the PCU approves the wastewater discharge permit transfer;

(B) The notice to PCU includes a written certification from the new owner or operator which:

1. States that the new owner and or operator has no immediate intent to change the facility's operations and processes;

2. Identifies the specific date on which the transfer is to occur; and

3. Acknowledges full responsibility for complying with the existing wastewater discharge permit.

Failure to provide advance notice of a transfer renders the wastewater discharge permit void as of the date of facility transfer. In no case will a transfer of a wastewater discharge permit extend the original expiration date.

4.13 Wastewater Discharge Permit Revocation

PCU may revoke a wastewater discharge permit for good cause, including, but not limited to, the following reasons:

(A) Failure to notify PCU of significant changes to the wastewater prior to the changed discharge;

(B) Failure to provide prior notification to PCU of changed conditions pursuant to Section 6.5 of this MANUAL;

(C) Misrepresentation or failure to fully disclose all relevant facts in the wastewater discharge permit application;

(D) Falsifying self-monitoring reports;

(E) Tampering and monitoring equipment;

(F) Refusing to allow PCU timely access to the facility premises and records;

(G) Failure to meet effluent limitations;

(H) Failure to pay fines;

(I) Failure to pay sewer charges;

(J) Failure to meet compliance schedules;

(K) Failure to complete a wastewater survey or the wastewater discharge permit application;

(L) Failure to provide advance notice of the transfer of business ownership of a permitted facility; or

(M) Violation of any pretreatment standard or requirement, or any terms of the wastewater discharge permit or this MANUAL.

Wastewater discharge permits shall be voidable upon cessation of operations or transfer of business ownership. All wastewater discharge permits issued to a particular user are void upon the issuance of a new wastewater discharge permit to that user.

4.14 Wastewater Discharge Permit Reissuance

A user with an expiring wastewater discharge permit shall apply for wastewater discharge permit reissuance by submitting a complete permit application, in accordance with Section 4.5 of this MANUAL, a minimum of 90 calendar days and maximum of 180 calendar days prior to the expiration of the user's existing wastewater discharge permit.

5.0 REPORTING REQUIREMENTS

5.1 Baseline Monitoring Reports

(A) Within either 180 calendar days after the effective date of a categorical pretreatment standard, or the final administrative decision on a category determination under 40 CFR 403.6(a)(4), whichever is later, existing categorical users currently discharging or scheduled to discharge to the WWTF shall submit to PCU a report which contains the information listed in paragraph B, below. At least 90 calendar days prior to the commencement of their discharge, new sources, and sources that become categorical users subsequent to the promulgation of an applicable categorical standard, shall submit to PCU a report which contains the information listed in paragraph B, below. A new source shall report the method of pretreatment it intends to use to meet applicable categorical standards.

A new source also shall give estimates of its anticipated flow and quantity of pollutants to be discharged.

(B) Users described above shall submit the information set forth below:

1. Identifying Information: The name and address of the facility, including the name of the operator and owner.

2. Environmental Permits: A list of any environmental control permits held by or for the facility.

3. Description of Operations: A brief description of the nature, average rate of production, and SICs of the operation(s) carried out at the facility. This description should include a schematic process diagram which indicates points of discharge to the WWTF from the regulated process.

4. Flow Measurement: Information showing the measured average daily and maximum daily flow, in GPD, to the WWTF from regulated process streams and

other streams, as necessary, to allow use of the combined waste stream formula set out in 40 CFR 403.6 (e).

5. Measurement of Pollutants:

   (a) The categorical pretreatment standards applicable to each regulated process; and

   (b) The results of sampling and analysis identifying the nature and concentration, and/or mass, where required by the standard or by PCU, or regulated pollutants in the discharge from each regulated process. Instantaneous, daily maximum, and long-term average concentrations, or mass, where required, shall be reported. The sample shall be representative of daily operations and shall be analyzed in accordance with procedures set out in Section 5.10 of this MANUAL;

6. Certification: A statement, reviewed by the user's authorized representative and certified by qualified personnel, indicating whether pretreatment standards are being met on a consistent basis, and, if not, whether additional operation and maintenance (O&M) and/or additional pretreatment is required to meet the pretreatment standards and requirements.

7. Compliance Schedule: If additional pretreatment and/or O&M will be required to meet the pretreatment standards, the shortest schedule by which the user will provide such additional pretreatment and/or O&M. The completion date in this schedule shall not be later than the compliance date established for the applicable pretreatment standard. A compliance schedule pursuant to this Section must meet the requirements set out in Section 5.2 of this MANUAL.

8. Signature and Certification: All baseline monitoring reports must be signed and certified in accordance with Section 4.6 of this MANUAL.

5.2 Compliance Schedule Progress Reports

The following conditions shall apply to the compliance schedule required by Section 5.1 (B) 7 of this MANUAL.

(A) The schedule shall contain progress increments in the form of dates for the commencement and completion of major events leading to the construction and operation of additional pretreatment required for the user to meet the applicable pretreatment standards (such events include, but are not limited to, hiring an engineer, completing preliminary and final plans, executing contracts for major components, commencing and completing construction, and beginning and conducting routine operation);

(B) No increment referred to above shall exceed nine months;

(C) The user shall submit a progress report to PCU no later than 14 calendar days following each date in the schedule and the final date of compliance including, as a minimum, whether or not it complied with the increment of progress, the reason for any delay, and, if appropriate, the steps being taken by the user to return to the established schedule; and

(D) In no event shall more than nine months elapse between such progress reports to PCU.

5.3 Reports on Compliance with Categorical Pretreatment Standard Deadline

Within 90 calendar days following the date for compliance with applicable categorical pretreatment standards, or in the case of a new source following commencement of the introduction of wastewater to the WWTF, any user subject to such pretreatment standards and requirements shall submit to PCU a report containing the information described in Section 5.1 (B) 4-6 of this MANUAL. For users subject to equivalent mass or concentration limits established in accordance with the procedures in 62-625.410(4) FAC and 40 CFR 403.6(c), this report shall contain a reasonable measure of the user's long-term production rate. For all other users subject to categorical pretreatment standards expressed in terms of allowable pollutant discharge per unit of production (or other measure of operation), this report shall include the user's actual production during the appropriate sampling period. All compliance reports must be signed and certified in accordance with Section 4.6 of this MANUAL.

5.4 Periodic Compliance Reports

(A) Each IU permitted under Section 4.0 of this MANUAL shall, at a frequency determined by PCU, but in no case less than twice a year, submit to PCU a report indicating the nature and concentration of pollutants in the discharge which are limited by pretreatment standards and the measured or estimated average and maximum daily flows for the reporting period. All periodic compliance reports must be signed and certified in accordance with Section 4.6 of this MANUAL.

(B) All wastewater samples must be representative of the user's discharge. Wastewater monitoring and flow measurement facilities shall be properly operated, kept clean, and maintained in good working order at all times. The failure of a user to keep its monitoring facility in good working order shall not be grounds for the user to claim that sample results are unrepresentative of its discharge.

(C) If a user subject to the reporting requirement in this Section monitors any pollutant more frequently than required by PCU, using the procedures prescribed in Section 5.10 of this MANUAL, the results of this monitoring shall be included in the report.

5.5 Reports of Changed Conditions

Each IU must notify PCU of any planned significant changes to the user's operations or systems which might alter the nature, quality, or volume of its wastewater at least 30 calendar days before the change.

(A) PCU may require the user to submit such information as may be deemed necessary to evaluate the changed condition, including the submission of a wastewater discharge permit application under Section 4.5 of this MANUAL.

(B) PCU may issue a wastewater discharge permit under Section 4.7 of this MANUAL or modify an existing wastewater discharge permit under Section 4.11 of this MANUAL in response to changed conditions or anticipated changed conditions.

(C) For purposes of this requirement, significant changes include, but are not limited to, flow increases of 20 percent (%) or greater, and the discharge of any previously unreported pollutants.

5.6 Reports of Potential Problems

(A) In the case of any discharge, including, but not limited to, accidental discharges, discharges of a non-routine, episodic nature, a non-customary batch discharge, or a slug load, that may cause potential problems for the WWTF, the user shall immediately telephone and notify PCU of the incident. This notification shall include the location of the discharge, type of waste, concentration and volume, if known, and corrective actions taken by the user.

(B) Within five calendar days following discharge, the user shall, unless waived by PCU, submit a detailed written report describing the cause(s) of the discharge and the measures to be taken by the user to prevent similar future occurrences. Such notification shall not relieve the user of any expense, loss, damage, or other liability, which may be incurred as a result of damage to the WWTF, natural resources, or any other damage to person or property; nor shall such notification relieve the user of any fines, penalties, or other liability which may be imposed pursuant to this MANUAL.

(C) A notice shall be permanently posted on the user's bulletin board or other prominent place advising employees whom to call in the event of a discharge

described in paragraph A, above. Employers shall ensure that all employees, who may cause such a discharge to occur, are advised of the emergency notification procedure.

5.7 Reports from Unpermitted Users

All IUs not required to obtain a wastewater discharge permit shall provide appropriate reports to PCU as PCU may require.

5.8 Notice of Violation/Repeat Sampling and Reporting

If sampling performed by a user indicates a violation, the user must notify the Director within 24 hours of the violation. The user shall also repeat the sampling and analysis and submit the results of the repeat analysis to the Director within 30 calendar days after becoming aware of the violation. The user is not required to resample if the Director monitors at the user's facility at least once a month, or if the Director samples between the user's initial sampling and when the user receives the results of this sampling.

5.9 Notification of the Discharge of Hazardous Waste

Discharges, in any amount, to the PCU WWTF of hazardous wastes under 40 CFR Part 261 are prohibited.

5.10 Analytical Requirements

All pollutant analyses, including sampling techniques, to be submitted as part of a wastewater discharge permit application or report shall comply with Chapter 62-160, FAC and shall be conducted under the requirements of Rule 62-160.300(5), FAC, which is Category 2A. Sampling activities and laboratory analyses shall be performed according to procedures specified in "The Department of Environmental Regulation Standard Operating Procedures for Laboratory Operations and Sample Collection Activities" (DERQA-001/92) September 1992. To the extent possible, analytical tests shall be performed in accordance with the techniques prescribed in Chapter 62-160FAC. If a test for a specific component is not available in 62-160, FAC, the testing laboratory shall use an alternative method approved by the Quality Assurance Section of FDEP, or in accordance with procedures approved by the EPA.

5.11 Sample Collection

(A) Except as indicated in Section B, below, wastewater samples must be collected using flow proportional composite collection techniques. In the event flow proportional sampling is unfeasible, PCU may authorize the use of time proportional sampling or a minimum of four grab samples where the user demonstrates that this will provide a representative sample of the wastewater

being discharged. In addition grab samples may be required to show compliance with instantaneous discharge limits.

(B) Samples for oil and grease, temperature, pH, cyanide, phenols, sulfides, and volatile organic compounds must be obtained using grab collection techniques.

5.12 Timing

Written reports will be deemed to have been submitted to PCU on the date postmarked. For reports which are not mailed, postage prepaid, through the United States Postal Service, the reports will be deemed to have been submitted on the actual date of receipt by PCU.

5.13 Record Keeping

Users subject to the reporting requirements of this MANUAL shall retain, and make available for inspection and copying, all records of information obtained pursuant to any monitoring activities required by this MANUAL and any additional records of information obtained pursuant to monitoring activities undertaken by the user independent of such requirements. Records shall include the date, exact place, method, and time of sampling, and the name of the person(s) taking the samples; the date dates the analyses were performed; who performed the analyses; the analytical methods or techniques used; and the results of such analyses. These records shall remain available for a period of at lease three years. This period shall be automatically extended for the duration of any litigation concerning the user or the County, or where the user has been specifically notified of a longer retention period by PCU.

6.0 COMPLIANCE MONITORING

6.1 Right of Entry: Inspection and Sampling

PCU personnel shall have the right to enter the premises of any user to determine whether the user is complying with all requirements of this MANUAL and any wastewater discharge permit or order issued hereunder. Users shall allow PCU personnel ready access to all parts of the premises for the purposes of inspection, sampling, records examination and copying, and the performance of any additional duties.

(A) Where a user has security measures in force which require proper identification and clearance before entry into its premises, the user shall make necessary arrangements with its security guards so that, upon presentation of suitable identification, PCU personnel will be permitted to enter without delay for the purposes of performing specific responsibilities.

(B) PCU shall have the right to set up on the user's property, or require installation of, such devices as are necessary to conduct sampling and/or metering of the user's operations.

(C) PCU may require the user to install monitoring equipment as necessary. The facility's sampling and monitoring equipment shall be maintained at all times in a safe and proper operating condition by the user at the user's own expense. All devices used to measure wastewater flow shall be calibrated at least yearly and a copy of calibration certification provided to PCU. All devices used to monitor wastewater quality shall be calibrated as often as necessary to ensure accuracy. Calibration records of wastewater quality monitoring equipment shall be made available to PCU upon request.

(D) Any temporary or permanent obstruction to safe and easy access to the facility to be inspected and/or sampled shall promptly be removed by the user at the written or verbal request of PCU and shall not be replaced. The costs of clearing such access shall be born by the user.

(E) Unreasonable delays in allowing PCU access to the user's premises shall be a violation of this MANUAL.

6.2 Search Warrants

If PCU has been refused access to a building, structure, or property, or any part thereof, and is able to demonstrate probable cause to believe that there may be a violation of this MANUAL, or that there is a need to inspect and/or sample as part of a routine inspection and sampling program of PCU designed to verify compliance with this MANUAL or any permit issued hereunder, or to protect the overall public health, safety, and welfare of the community, then PCU may seek issuance of a search warrant from a court of competent jurisdiction.

6.3 Use of Reported Information

Information and data on a user obtained from reports, surveys, wastewater discharge permits, monitoring programs, and sampling and inspection activities shall be made available to the public without restriction, unless the user specifically requests otherwise in writing, and is able to demonstrate to PCU that such information and data is entitled to protection as trade secrets under applicable State law. Any and all information gathered under this MANUAL, including confidential information, shall be made available immediately upon request to governmental agencies for uses related to the NPDES program or pretreatment program, and in enforcement proceedings involving the person furnishing the report. Wastewater constituents and characteristics and other effluent data will not be recognized as confidential information and will be available to the public without restriction.

7.0 PUBLICATION OF USERS IN SIGNIFICANT NONCOMPLIANCE

PCU shall publish annually, in the daily newspaper with the largest distribution in the area where the WWTF is located, a list of the users which, during the previous 12 months, were in significant noncompliance with applicable pretreatment standards and requirements. The term significant noncompliance shall mean:

(A) Chronic violations of wastewater discharge limits, defined here as those in which 66% or more of wastewater measurements taken during a 6 calendar month period exceed the daily maximum limit or average limit for the same pollutant parameter by any amount;

(B) Technical Review Criteria (TRC) violations, defined here as those in which 33% or more of wastewater measurements taken for each pollutant parameter during a 6 calendar month period equals or exceeds the product of the daily maximum limit or the average limit multiplied by the applicable criteria (1.4 for BOD, TSS, fats, oils and grease, and 1.2 for all other pollutants except pH);

(C) Any other discharge that PCU believes has caused, alone or in combination with other discharges, interference or pass through, including endangering the health of WWTF personnel or the general public;

(D) Any discharge of pollutants that has caused imminent endangerment to the public or to the environment, or has resulted in PCU's exercise of its emergency authority to halt or prevent such a discharge;

(E) Failure to meet, within 90 calendar days of the scheduled date, a compliance schedule milestone contained in a wastewater discharge permit or enforcement order for starting construction, completing construction, or attaining final compliance;

(F) Failure to provide within 30 calendar days after the due date, any required reports, including baseline monitoring reports, reports on compliance with categorical pretreatment standard deadlines, periodic self-monitoring reports, and reports on compliance with compliance schedules;

(G) Failure to accurately report noncompliance; or

(H) Any other violation(s) which PCU determines will adversely affect the operation or implementation of the local pretreatment program.

8.0 ADMINISTRATIVE ENFORCEMENT REMEDIES

8.1 Authority of PCU

In the enforcement of this MANUAL, PCU may:

(A) Suspend wastewater treatment service and/or a wastewater discharge permit;

(B) Revoke a wastewater discharge permit;

(C) Establish measures designed to correct violations and compliance schedules for such measures;

(D) Impose a fine of at least $1,000 per day, per violation, for each day that a violation continues beyond the date established by PCU for its correction regardless of any other enforcement action. Any fine imposed under this Section may, at the discretion of PCU, be retroactive to the date the user was notified; and

(E) Enact any combination of the above.

8.2 Notification to the User of Violation

When PCU finds that a user has violated, or continues to violate, any provision of this MANUAL, a wastewater discharge permit, or order issued hereunder, or any other pretreatment standard or requirement, PCU shall serve or cause to be served upon that user, by hand delivery, or certified mail, return receipt requested, a written notice stating the nature of the violation, Except as otherwise provided for in this MANUAL, the violator shall, within 30 days of this notification, submit to PCU an explanation of the violation and a written plan for correcting the violations which shall include the manner in which corrections will be made, the time in which all such violations will be corrected, and a plan to prevent such violations from recurring. Submission of this plan in no way relieves the user of any liability for any violations occurring before or after receipt of the Notice of Violation. Nothing in this Section shall limit the authority of PCU to take any action, including emergency actions or any other enforcement action, without first issuing a Notice of Violation to the user.

8.3 Consent Orders

The County/PCU may enter into Consent Orders, assurances of voluntary compliance, or other similar documents establishing an agreement with any user responsible for noncompliance. Such documents will include specific action to be taken by the user to correct the noncompliance within a time period specified by the document. Such documents shall have the same force and effect as the administrative orders issued pursuant to Sections 8.5 and 8.6 of this MANUAL and shall be judicially enforceable.

8.4 Show Cause Hearing

PCU may order a user which has violated, or continues to violate, any provision of this MANUAL, a wastewater discharge permit issued under this MANUAL, or any other pretreatment standard or requirement, to appear before PCU, and show cause why the proposed enforcement action should not be taken. Notice shall be served on the user specifying the time and place for the meeting, the proposed enforcement action, the reasons for such action, and a request for the user to show cause why the proposed enforcement action should not be taken. This notice of the meeting shall be served by hand delivery or by registered mail (return receipt requested) at least 30 calendar days prior to the hearing. Such notice may be served upon any authorized representative of the user. A show cause hearing shall not be a bar against, or prerequisite for, taking any other action against the user.

8.5 Compliance Orders

When PCU finds that a user has violated, or continues to violate, any provision of this MANUAL, a wastewater discharge permit or order issued hereunder, or any other pretreatment standard or requirement, PCU may issue an order to the user responsible for the discharge directing that the user come into compliance within a specified time. If the user does not come into compliance within the specified time, sewer service may be discontinued unless adequate treatment facilities, devices or other related appurtenances are installed and properly operated. Compliance orders may also contain other requirements to address the noncompliance, including additional self-monitoring and management practices designed to minimize the amount of pollutants discharged to the PCU WWTF. A compliance order may not extend the deadline for compliance established for a pretreatment standard or requirement, nor does a compliance order relieve the user of liability for any violation, including any continuing violation. Issuance of a compliance order shall not be a bar against, or a prerequisite for, taking any other action against the user.

8.6 Cease and Desist Orders

When PCU finds that a user has violated, or continues to violate, any provision of this MANUAL, a wastewater discharge permit or order issued hereunder, or any other pretreatment standard or requirement, or that the user's past violations are likely to recur, PCU may issue an order to the user directing it to cease and desist all such violations and directing the user to:

(A) Immediately comply with all requirements; and

(B) Take such appropriate remedial or preventive action as may be needed to properly address a continuing or threatened violation, including halting operations and/or terminating the discharge.

8.7 Administrative Fines

When PCU finds that a user has violated, or continues to violate, any provision of this MANUAL, a wastewater discharge permit or order issued hereunder, or any other pretreatment standard or requirement, PCU may fine such user a minimum amount of $1,000 per day per violation.

8.8 Emergency Suspensions

PCU may immediately suspend a user's discharge, after informal notice to the user, whenever such suspension is necessary to stop an actual or threatened discharge which reasonably appears to present or cause an imminent or substantial endangerment to the health or welfare of persons, or threatens to interfere with the operation of the WWTF, or which presents, or may present an endangerment to the environment.

(A) Any user notified of a suspension of its discharge shall immediately stop or eliminate its contribution. In the event of a user's failure to immediately comply with the suspension order, PCU may take such steps deemed necessary, including immediate severance of the sewer connection, to prevent or minimize damage to the WWTF, its receiving stream or reuse system, or endangerment to any individuals. PCU may allow the user to recommence its discharge when the user has demonstrated to the satisfaction of PCU that the period of endangerment has passed, unless the termination proceedings described in Section 8.9 of this MANUAL are initiated against the user.

(B) A user that is responsible, in whole or in part, for any discharge presenting imminent endangerment shall submit a detailed written statement, describing the causes of the harmful contribution and the measures taken to prevent any future occurrence, to PCU prior to the date of any show cause or termination hearing under Sections 8.4 or 8.9 of this MANUAL.

Nothing in this Section shall be interpreted as requiring a hearing prior to any emergency suspension under this Section.

8.9 Termination of Discharge

In addition to the provisions in Section 4.13 of this MANUAL, any user who violates any of the following conditions is subject to discharge termination:

(A) Violation of wastewater discharge permit conditions;

(B) Failure to accurately report the wastewater constituents and characteristics of its discharge;

(C) Failure to report significant changes in operations of wastewater volume, constituents, and characteristics prior to discharge;

(D) Refusal of reasonable access to the user's premises for the purpose of inspection, monitoring, or sampling; or

(E) Violations of the pretreatment standards in Section 2.0 of this MANUAL. Such user will be notified of the proposed termination of its discharge and be offered an opportunity to show cause under Section 8.4 of this MANUAL why the proposed action should not be taken. Exercise of this action by PCU shall not be a bar to, or a prerequisite for, taking any other action against the user.

9.0 JUDICIAL ENFORCEMENT REMEDIES

9.1 Injunctive Relief

When PCU finds that a user has violated, or continues to violate, any provision of this MANUAL, a wastewater discharge permit or order issued hereunder, or any other pretreatment standard or requirement, PCU may petition the Civil Court through the County Attorney for the issuance of a temporary or permanent injunction, as appropriate, which restrains or compels the specific performance of the wastewater discharge permit, order or other requirement imposed by this ordinance on activities of the user. PCU may also seek such other action as is appropriate for legal and/or equitable relief, including a requirement for the user to conduct environmental remediation. A petition for injunctive relief shall not be a bar against, or a prerequisite for, taking any other action against a user.

9.2 Civil Penalties

(A) A user who has violated, or continues to violate, any provision of this MANUAL, a wastewater discharge permit, or order issued hereunder, or any other pretreatment standard or requirement shall be liable to PCU for a maximum civil penalty of $2,000 per violation per day. In the case of a monthly or other long-term average discharge limit, penalties shall accrue for each day during the period of the violation.

(B) PCU may recover reasonable attorney's fees, court costs, and other expenses associated with enforcement activities, including sampling and monitoring expenses, and the cost of any actual damages incurred by PCU.

(C) In determining the amount of civil liability, the Court shall take into account all relevant circumstances, including, but not limited to, the extent of harm caused by the violation, the magnitude and duration of the violation, any economic benefit

gained through the user's violation, corrective actions by the user, the compliance history of the user, and any other factor as justice requires.

(D) Filing a suit for civil penalties shall not be a bar against, or a prerequisite for, taking any other action against a user.

9.3 Criminal Prosecution

(A) A user who willingly or negligently violates any provision of this MANUAL, a wastewater discharge permit, or order issued hereunder, or any other pretreatment standard or requirement shall, upon conviction, be guilty of a misdemeanor, punishable by a fine of not more than $2,000 per violation, per day, or imprisonment for not more than 60 calendar days, or both.

(B) A user who willfully or negligently introduces any substance into the WWTF which causes personal injury or property damage shall, upon conviction, be guilty of a misdemeanor and be subject to a penalty of at least $1,000 or be subject to imprisonment for not more than 60 calendar days, or both. This penalty shall be in addition to any other cause of action for personal injury or property damage available under State law.

(C) A user who knowingly makes any false statements, representations, or certifications in any application, record, report, plan, or other documentation filed, or required to be maintained, pursuant to this MANUAL, wastewater discharge permit, or order issued hereunder, or who falsifies, tampers with, or knowingly renders inaccurate any monitoring device or method required under this MANUAL, shall, upon conviction, be punished by a fine of not more than $2,000 per violation, per day, or imprisonment for not more than 60 calendar days, or both.

(D) In the event of a second conviction, a user shall be punished by a fine of not more than $2,000 per violation, per day, or imprisonment for not more than 60 calendar days, or both.

9.4 Remedies Nonexclusive

The remedies provided for this MANUAL are not exclusive. PCU may take any, all, or any combination of these actions against a noncompliant user. Enforcement of pretreatment violations will generally be in accordance with PCU's enforcement response plan. However, PCU may take other action against any user when the circumstances warrant. Further, PCU is empowered to take more than one enforcement action against any noncompliant user.

10.0 SUPPLEMENTAL ENFORCEMENT ACTION

10.1 Performance Bonds

PCU may decline to issue or reissue a wastewater discharge permit to any user who has failed to comply with any provision of this MANUAL, a previous wastewater discharge permit, or order issued hereunder, or any other pretreatment standard or requirement, unless such user first files a satisfactory bond, payable to the County, in a sum not to exceed a value determined by PCU to be necessary to achieve consistent compliance.

10.2 Liability Insurance

PCU may decline to issue or reissue a wastewater discharge permit to any user who has failed to comply with any provision of this MANUAL, a previous wastewater discharge permit, or order issued hereunder, or any other pretreatment standard or requirement, unless such user first submits proof that it has obtained financial assurances sufficient to restore or repair damage to the WWTF caused by its discharge.

10.3 Water Supply Severance

Whenever a user has violated or continues to violate any provision of this MANUAL, a wastewater discharge permit, or order issued hereunder, or any other pretreatment standard or requirement, water service to the user may be severed. Service will only recommence, at the user's expense, after it, has satisfactorily demonstrated its ability to comply.

10.4 Public Nuisances

A violation of any provision of this MANUAL, a wastewater discharge permit, or order issued hereunder, or any other pretreatment standard or requirement is hereby declared a public nuisance and shall be corrected or abated as directed by PCU. Any person(s) creating a public nuisance shall be subject to the provisions of the County ordinance governing such nuisances, including reimbursing the County for any costs incurred in removing, abating, or remedying said nuisance.

10.5 Contractor Listing

Users which have not achieved compliance with applicable pretreatment standards and requirements are not eligible to receive a contractual award for the sale of goods or services to the County. Existing contracts for the sale of goods or services to the County held by a user found to be in significant noncompliance with pretreatment standards or requirements may be terminated at the discretion of the County.

11.0 AFFIRMATION DEFENSES TO DISCHARGE VIOLATIONS

11.1 Upset

INDUSTRIAL WASTEWATER PRETREATMENT POLICY MANUAL

(A) For the purposes of this Section, "upset" means an exceptional incident in which there is unintentional and temporary noncompliance with categorical pretreatment standards because of factors beyond the reasonable control of the user. An upset does not include noncompliance to the extent caused by operational error, improperly designed treatment facilities, inadequate treatment facilities, lack of preventive maintenance, or careless or improper operation.

(B) An upset shall constitute an affirmative defense to an action brought for noncompliance with categorical pretreatment standards if the requirements of paragraph (C) below are met.

(C) A user who wishes to establish the affirmative defense of upset shall demonstrate, through properly signed, contemporaneous operating logs, or other relevant evident that:

1. An upset occurred and the user can identify the cause(s) of the upset;

2. The facility was at the time being operated in a prudent and workman-like manner and in compliance with applicable operation and maintenance procedures; and

3. The user has submitted the following information to the Director within 24 hours of becoming aware of the upset. (If this information is provided orally, a written submission must be provided within 5 calendar days.):

    a) A description of the indirect discharge and cause of non-compliance;

    b) The period of noncompliance, including exact dates and times, or, if not corrected, the anticipated time the noncompliance is expected to continue; and

    c) Steps being taken and/or planned to reduce, eliminate, and prevent recurrence of the noncompliance.

(D) If any enforcement proceeding, the user seeking to establish the occurrence of an upset shall have the burden of proof.

(E) Users will have the opportunity for a judicial determination on any claim of upset only in an enforcement action brought for noncompliance with categorical pretreatment standards.

(F) Users shall control production of all discharges to the extent necessary to maintain compliance with categorical pretreatment standards upon reduction, loss, or failure of its treatment facility until the facility is restored or an alternative method of treatment is provided. This requirement applies in the situation where,

INDUSTRIAL WASTEWATER PRETREATMENT POLICY MANUAL

among other things, the primary source of power of the treatment facility is reduced, lost, or fails.

11.2 Prohibited Discharge Standards

A user shall have an affirmative defense to an enforcement action brought against it for noncompliance with the general prohibitions in Section 2.1 (A) of this MANUAL, or the specific prohibitions in Section 2.1 (B) (3) through (7) of this MANUAL if it can prove that it did not know, or have reason to know, that its discharge, alone or in conjunction with discharges from other sources, would cause pass through or interference and that either:

(A) A local limit exists for each pollutant discharged and the user was in compliance with each limit directly prior to, and during, the pass through or interference; or

(B) No local limit exists, but the discharge did not change substantially in nature or constituents from the user's prior discharge when PCU was regularly in compliance with its operating permit, and in the case of interference, was in compliance with permitted sludge use or disposal requirements.

11.3 Bypass

(A) For the purposes of this Section,

1. "Bypass" means the intentional diversion of waste streams from any portions of a user's treatment facility.

2. "Severe property damage" means substantial physical damage to property, damage to the treatment facilities which causes them to become inoperable, or substantial and permanent loss of natural resources which can reasonably be expected to occur in the event of a bypass. Severe property damage does not mean economic loss caused by delays in production.

(B) A user may allow any bypass to occur which does not cause pretreatment standards or requirements to be violated, but only if it also is for essential maintenance to assure efficient operation. These bypasses are not subject to the provisions of paragraphs (C) and (D) of this Section.

(C) User:

1. If the user knows in advance of the need for a bypass, it shall submit prior notice to the Director at least 10 calendar days before the date of the bypass, if possible.

INDUSTRIAL WASTEWATER PRETREATMENT POLICY MANUAL

2. A user shall submit oral notice to the Director of an unanticipated bypass that exceeds applicable pretreatment standards within 24 hours from the time it becomes aware of the bypass. A written submission shall also be provided within 5 calendar days of the time the user becomes aware of the bypass. The written submission shall contain a description of the bypass and its cause; the duration of the bypass, including exact dates and times, and, if the bypass has not been corrected, the anticipated time it is expected to continue; and steps taken or planned to reduce, eliminate, and prevent reoccurrence by the bypass. The Director may waive the written report on a case-by-case basis if the oral report has been received within 24 hours.

(D) Director:

1. Bypass is prohibited, and the Director may take enforcement action against a user for bypass, unless:

   (a) Bypass was unavoidable to prevent loss of life, personal injury, or severe property damage;

   (b) There were no feasible alternatives to the bypass, such as the use of auxiliary treatment facilities, retention of untreated wastes, or maintenance during normal periods of equipment downtime. This condition is not satisfied if adequate back-up equipment should have been installed in the exercise of reasonable engineering judgment to prevent a bypass which occurred during normal periods of equipment downtime or preventive maintenance; and

   (c) The user submitted notices as required under paragraph (C) of this Section.

2. The Director may approve an anticipated by-pass, after considering its adverse effects, if the Director determines that it will meet the three conditions listed in paragraph (D) 1 of this Section.

12.0 WASTEWATER PRETREATMENT RATES, CHARGES, AND FEES

12.1 Wastewater Pretreatment Rates

Rates to be charged for pretreatment services provided by PCU will be developed and implemented, as necessary, in accordance with PCU standard operating procedure for determining rates.

12.2 Charges and Fees

PCU may adopt a Fee Assessment Schedule by a separate Board approved Resolution that shall establish reasonable rates and fees for reimbursement of costs for administrating this MANUAL. These charges may include:

(A) Fees for wastewater discharge permit applications, including the cost of processing such applications;

(B) Fees for monitoring, inspection, and surveillance procedures including the cost of collection and analyzing a user's discharge, and reviewing monitoring reports submitted by users;

(C) Fees for reviewing and responding to accidental discharge procedures and construction;

(D) Fees for filing appeals; and

(E) Other fees as PCU may deem necessary to carry out the requirements contained herein. These fees relate solely to the matters covered by this MANUAL and are separate from all other fees, fines, and penalties chargeable by PCU.

Charges and fees related solely to the matters covered by this Section are separate from all other fees chargeable by the PCU. Charges and fees shall be directly assessed to the customer for the recovery of actual costs of County labor, materials, and equipment (including customary PCU overhead expenses) and for the invoiced charges by other persons for performing any of the above services or any additional services.

Polk County Utilities, Florida

WATER CONSERVATION MANUAL

Utilities Code Reference Manual 6(F)

Polk County Board of County Commissioners

Bob English	Melony Bell	Ed Smith	Todd Dantzler	Sam Johnson
District 1	District 2	District 3	District 4	District 5

Jim Freeman	Bill Beasley, PE	Gary Fries, PE
County Manager	Deputy County Manager	Utilities Director

December 2010

(Reference Manual Updates: March 2012, December 2012)

1.0 INTRODUCTION

1.1 General

Polk County Utilities (PCU) owns and operates 16 community PWS systems in six (6) Regional Utility Service Areas that combined, equate to a total service area of 213 square miles (136,320 acres) of Polk County. These Regional Utility Service Areas are as follows: The Central Regional Utility Service Area (CRUSA), Northeast Regional Utility Service Area (NERUSA), the Northwest Regional Utility Service Area (NWRUSA), the Southwest Regional Utility Service Area (SWRUSA), the East Regional Utility Service Area (ERUSA), and the Southeast Regional Utility Service Area (SERUSA). The PCU Regional Utility Service Areas (RUSAs) are illustrated in **Figure I**.

PCU's Public Water Supply (PWS) systems are identified by the customer billing zones and the servicing water treatment plants (WTPs). **Table I** shows the billing zones and corresponding water treatment plants by PCU PWS.

1.2 Purpose

The majority of Polk County is within the Southern Water Use Caution Area (SWUCA). The purpose of the SWUCA is to recognize that the region is in need of specialized water resource management. Water resource concerns associated with the SWUCA involve the decline of lake levels along the Highlands Ridge and advancing coastal saltwater intrusion in the Floridan Aquifer. Water withdrawals at any point in the SWUCA can affect water levels over large areas. **Table II** indicates the PCU PWSs and the Water Use Caution Areas associated with each one.

In 2003, the St. John's River Water Management District was relieved of jurisdiction over the northeast portion of Polk County. Most of the PCU RUSAs are now within the jurisdiction of SWFWMD. A small portion of the SERUSA (Walk-in-Water PWS) and NERUSA (Oak Hills WTP) are within the SFWMD. As all six (6) of PCU's RUSAs have the same basic issues with regard to water conservation and the implementation of most water conservation programs will be conducted for all RUSAs concurrently so as to provide water conservation benefits to all of our customers equally, this MANUAL is being updated to incorporate the MANUAL for each service area into one document with a separate Appendix for each service area to address specific differences in demographics and availability of some programs, such as reclaimed water service. In general, this MANUAL has been developed to support current and future water use permitting efforts with the

Southwest Florida and South Florida Water Management Districts (SWFWMD and SFWMD) and will promote effective water resource protection.

This MANUAL includes a combination of educational, financial, operational, and regulatory initiatives to encourage efficient water use, while remaining consistent with PCU's goals in customer service. New positions and programs have been created at PCU to implement water conservation methods, expand reclaimed water service, and promote public education on water conservation. PCU's problem of minimal staff resources has limited this effort in the past.

1.3 Definitions

Except where specific definitions are used within a specific section, the following terms, phrases, words, and their derivations shall have the meaning given herein when consistent with the context. Words used in the present tense include the future tense, words in the plural number include the singular number, and words in the singular number include the plural number. The word "shall" is mandatory, and the word "may" is permissive.

AWWA: American Water Works Association. Any reference to AWWA Standards shall be taken to mean the most recently published revision unless other wise specified.

ACCEPTANCE: formal acceptance of a utility system by the County in open session by way of agenda item approval, as prepared and presented by PCU.

BUILDING DIVISION: County Building Division.

COMMERCIAL: NON-RESIDENTIAL.

CONSTRUCTION PLANS: drawings submitted to Polk County for approval for construction of utility systems.

COMPREHENSIVE PLAN: the Polk County Comprehensive Plan (most recent edition).

CONTRACTOR: person, firm, or corporation with whom a contract for work has been made by owner, developer, or County.

CONVEYANCE AND OWNERSHIP OF UTILITY SYSTEMS: all utility system components to be owned by PCU shall be conveyed to PCU by proper bill of sale immediately after the Board's written acceptance of the construction of said utility system.

COUNTY: Polk County Board of County Commissioners, Polk County, Florida.

COVER SHEET: the first sheet in a set of engineering drawings or plans.

DEVELOPER: person, firm, or corporation engaged in developing or improving real estate for use or occupancy.

DEVELOPMENT (AKA DEVELOPER), UTILITIES, OR INTERLOCAL AGREEMENT: a written agreement between the BOCC and a developer, property owner, or governmental entity setting forth in detail the terms and conditions under which PCU will provide utility service to the developer's project, the property owner's property, or the governmental entity. Such agreement will be made at the option of PCU where it deems such an agreement is in its best interest in order to facilitate the construction of capital project improvements that are designated in the Community Investment Plan and/or Master Plan for a particular RUSA, or as otherwise deemed necessary by PCU.

DEVELOPMENT COORDINATION: the Development Review staff located within the Land Development Division.

DIRECTOR: the person who is responsible for the day to day administration and management of Polk County Utilities.

DRAWINGS: engineering drawings or plans prepared by engineer.

ENGINEER: Person or firm that is licensed by the State of Florida as a professional engineer pursuant to F.S. Ch 471.

EXCLUSIVE PROVIDER: except as otherwise provided herein and approved by PCU, PCU shall be the exclusive provider of utility service within a PCU RUSA.

FACILITY: utility systems and related infrastructure.

FDOT: the Florida Department of Transportation.

INSPECTOR: an individual empowered by Polk County to inspect potable water, wastewater, and reclaimed water facilities.

LAND DEVELOPMENT CODE: the "Polk County Land Development Code".

MANUAL: this document titled: "Polk County Utilities Water Conversation Policy Manual".

NON-RESIDENTIAL: a land development project intended for construction of infrastructure improvements for non-residential unit(s) and/or use(s). Non-residential units and/or uses include all units/uses that are not individually metered single family dwellings, including, but not limited to: commercial, industrial, institutional, short-term rental, and other business enterprises, and all master-metered residential developments, such as duplex, triplex, quadruplex, apartment, condominium, and other multifamily units/complexes, mobile home parks, recreational vehicle parks, etc.

OPERATIONS: the Polk County entity responsible for the operations and maintenance of the Polk County Utilities potable water, wastewater, and reclaimed water systems.

POLK COUNTY UTILITIES (PCU): the Polk County entity that has the responsibility of administering, operating, and maintaining the Polk County Utilities (PCU) water, wastewater, and reclaimed water utility systems.

POLK COUNTY UTILITIES EASEMENT: an easement as specified in the Utilities Standards and Specifications Manual that is dedicated to the use of PCU. Conveyance of any PCU easement not depicted on a recorded plat shall be by separate easement document in recordable form approved by PCU.

POTABLE WATER SYSTEM: the pipes, structures, equipment, processes, land, and appurtenances thereto, required to operate and maintain a system to treat, pump, store, distribute, and meter potable water.

PLANS: means drawings as defined herein above.

RECLAIMED WATER SYSTEM: the pipes, structures, equipment, processes, land, and appurtenances thereto, required to operate and maintain a system which produces and distributes reclaimed water for irrigation purposes and other authorized uses.

RECORD DRAWINGS: drawings prepared by a Florida licensed professional engineer or Florida licensed professional land surveyor providing information, both written and drawn,

as to the actual locations, elevations, and alignments of valves, fittings, hydrants, manholes, pipes, etc.

REFERENCE MANUAL 6(A): the Polk County Utilities Administration Manual, adopted by reference herein.

REFERENCE MANUAL 6(B): the Polk County Utilities Standards and Specifications Manual, adopted by reference herein.

REFERENCE MANUAL 6(C): the Polk County Utilities Cross-Connection Control Policy Manual, adopted by reference herein.

REFERENCE MANUAL 6(D): the Polk County Utilities Reclaimed Water Policy Manual, adopted by reference herein.

REFERENCE MANUAL 6(E): the Polk County Industrial Wastewater Pre-Treatment Policy Manual, adopted by reference herein.

REFERENCE MANUAL 6(F): this Manual, the Polk County Utilities Water Conservation Policy Manual, adopted by reference herein.

REFERENCE MANUAL 6(G): the Polk County Utilities Fats, Oils, and Grease Policy Manual, adopted by reference herein.

REGIONAL UTILITY SERVICE AREA: an established area for the purpose of planning and the provision of utility service to existing and future PCU customers. Because of the large size and topographic diversity of Polk County, it is not practical to construct a single unified or a completely interconnected system of utility facilities. Therefore, a series of separate utility systems is provided as needed in accordance with reasonable and acceptable engineering standards and economic principles.

RESIDENTIAL: a single-family residential dwelling unit served by an individual meter, not including a short-term rental unit.

SHORT-TERM RENTAL: a dwelling unit which is made available more than three times a year for periods of fewer than 30 calendar days or one calendar month at a time, whichever is less, for use, occupancy or possession by the public, regardless of the form of ownership of the unit. Dwelling units commonly referred to as "timeshares," "vacation rentals," and "holiday rentals" which possess the above characteristics are included within this definition.

SPECIFICATIONS: the construction specifications contained in the "Polk County Utilities Standards and Specifications Manual".

STANDARDS: the design standards contained in the "Polk County Utilities Standards and Specifications Manual".

SURVEYOR: A person licensed by the State of Florida as a professional surveyor and mapper pursuant to Chapter 472, F.S.

UTILITY SERVICE: the provision of potable water, wastewater, and/or reclaimed water service to a customer.

UTILITY SYSTEM: potable water, reclaimed water, and wastewater transmission mains, distribution mains, pipes, fittings, valves, hydrants, services, meters, pumps, pump stations, production facilities, treatment facilities, and miscellaneous related appurtenances.

WASTEWATER SYSTEM: the structures, equipment, processes, land, and appurtenances thereto, required to operate and maintain a system to collect, convey, and treat wastewater and dispose of the effluent and sludge. Wastewater systems do not include storm water facilities.

WORK: the labor, materials, equipment, supplies, services, and other items necessary for the execution, and completion of the utility system.

1.4 Data Collection

The challenge of water resource planning is to maintain a high quality service and sufficient supply in the face of a steady increase in water demands, decrease in resource availability and inflation in the cost of operation. SWFWMD has outlined the required information that must be compiled and analyzed before establishing a Water Conservation Policy for an identified service area. The applicable data components for this plan are discussed below.

1.4.1 Current Use

Table III depicts the number of residential services, industrial/commercial services and the overall water use by year and region. The type of water use and percentage of each type is also shown.

1.4.2 Per Capita Consumption

To calculate per capita consumption, the total average usage of a region is divided by the average functional population. PCU follows SWFWMD's compliance methodology for the calculation of functional population (*Chapter 40D-2, Florida Administrative Code (F.A.C.), Water Use Permit Information Manual Part D – Requirements for the Estimation of Permanent and Temporal Service Area Populations, Effective January 20, 2009)*. The functional population estimates and per capita calculations for each of the service areas are found in **Table IV**. PCU has established a goal of 132 gallons per capita per day (gpcd) in support of complying with the standard of 150 gpcd for the SWFWMD.

1.4.3 Demographics and Demand Projections

The connections for the PCU RUSAs are primarily single-family homes/trailers on large lots, but also include a large number of mobile homes, multi-family units, as well as some commercial facilities. **Table V** gives the demographic breakdown for each of the service areas.

Population and corresponding water demand rates are the most important factors in determining the need for additional water supply and treatment facilities. Historical rates of water usage are analyzed to better understand demand factors. The methodology to calculate the demand projections shall involve the development of a baseline population and then project population growth at a reasonable rate consistent with the appropriate demand factors within each service area. An average residential per capita rate is then calculated for the baseline water usage in each service area and then multiplied by the population projection for each service area to determine the future water demand. The population projections and future water demands are included in the **Table VI** for each service area.

1.4.4 Supply Sources

The existing water supply source for all of PCU's RUSAs is from groundwater wells drilled into the Upper Floridan Aquifer. SWFWMD has permitted a groundwater withdrawal of nearly 26 MGD (annual average daily flow (AADF) basis). SFWMD has permitted an additional 3.1 MGD (AADF). A breakdown of the permitted quantities for each of the service areas is shown in **Table VII**.

1.4.5 System Deficiencies

When water use reports are found to be irregular, it is usually due to correlation discrepancies between well meters and the billing procedures. PCU continually reviews its billing system for coding errors to help alleviate the problem and they continually utilize Best Management Practices to reduce unaccounted for water loss in the field. While PCU is prompt in repairing leaks and faulty meters, staff has found that most unaccounted for water events are due to flushing reports that are not promptly submitted or never completed as well as unrecovered quantities from the issuance of credits to water accounts when customers have a line break or leak.

PCU is approaching leak detection and water use audits from two ways. The first is through PCU's Leak Detection and System Maintenance/Repair Program. The Operations and Maintenance Division handles leak detection on an operator detection or complaint basis only. PCU works quickly and diligently to repair any discovered leaks. Most work orders regarding leaks are generated by customer calls.

All meters for pipe sizes two (2) inches in diameter and greater are retrofitted by the Customer Services Section of PCU. The Section calibrates large commercial meters annually, and replaces any meters which are reported inaccurate. Upon request, residential meters are audited and/or tested for accuracy. Daily reports on meters and readings are monitored for accuracy, if the reports reflect inconsistency, the meter is changed out. Residential meters are on a preventive maintenance program and are subject for change every ten (10) years. Annually, commercial meters and water and wastewater plant meters are tested and calibrated. All services with cross connection control assemblies are tested once a calendar year. Defective meters are repaired and rebuilt or replaced. Unscheduled services are handled through work orders generated by customer requests.

PCU has implemented an illegal connection detection program. Private developers originally owned many of the water systems currently owned by the PCU. Thus, specific information regarding the location of all main line connections is not available. It has been discovered that a number of these systems may have numerous unmetered connections. Also, with all of the on-going new development, tie-ins to the lines occur and often the water is used for site construction without being metered or paid for. PCU has instituted a program to detect “illegal” connections and seal them off. Water pumpage records can now be compared to the billing records. Individual systems with high unaccounted for water use are then systematically evaluated for unmetered connections.

The second approach is aimed at the customer base to identify water loss and leaks on the customer side of the meter. This program, handled by the Customer Service Division, consists of audits on meters indicating irregular meter readings. These audits will include calibration checks on each source meter, the identification of service meters that have recorded zero consumption three months in a row, the isolation of water consumption by subdivision for targeting conservation efforts and identifying system leaks. Prior to July 1, 2004, PCU contracted with Water Works of America to perform individual home water audits. On July 1, 2004, PCU hired a Mobile Irrigation Lab Technician to replace the contract for the individual home water audits. This individual would set appointments with customers who are having high water bills and reviews their irrigation system for water conserving improvements. In 2007, PCU completed a meter change out program to replace existing customer meters with automatic read meters. The Customer Service Division can evaluate exception reports for meters reading constantly more than 24 hours and identify other unusual use patterns without having to send out a technician.

Flow meter calibrations are required to be within 5% of any test meter result (high or low), which if the well pump contributes a large amount to the total water supply, can account for a significant portion of the unaccounted for water loss. The overall average unaccounted for water loss percentage for PCU is less than 10%. The unaccounted for water loss by service area is shown in **Table VIII**.

1.4.6 Interlocal Service Agreements

Most of PCU's water customers are located in one of six large PWS systems within the six (6) RUSAs. The remaining customers are located in smaller, isolated systems within the six (6) regions. Due to the distance these isolated systems are from the larger systems, the entire RUSA cannot be interconnected, within the region or between regions. Some of these PWS systems have emergency interconnects with local municipalities or neighboring communities. **Table IX** indicates any interconnections PCU has with other municipalities or counties by region.

1.4.7 Water Quality and Treatment and Distribution Systems

PCU conducts water quality assessments for raw water supply wells and the points of entry (WTP-source). The samples are taken and analyzed every three years for primary and secondary drinking water standards, as defined in Chapter 62-550, F.A.C.

Each PWS is comprised of separate WTPs that are owned and operated by PCU. Each WTP uses variations on the same process of treatment; raw water is pumped from the well, chlorinated for disinfection, and pumped to hydro-pneumatic tanks for distribution. The individual plants differ somewhat in equipment and structure. Differences in treated water quality would be due to point of chlorine application and the corrosion control treatment. Some systems require additional treatment to address specific water quality issues. These treatment processes are summarized by PWS in **Table X**.

1.4.8 Reclaimed Water Service Potential

PCU has a Public Access Reclaimed Water Program for golf courses, common area irrigation, and residential landscape irrigation. However, this service is available in only three of the RUSAs (NERUSA, NWRUSA, and SWRUSA). The characteristics of each of PCU's public access reclaimed water systems are illustrated in **Table XI**. The existing transmission mains and status of each subdivision are depicting in the Reclaimed Water System Maps, included as **Figures 2, 3 and 4** for the SWRUSA, NERUSA and NWRUSA, respectively.

The remaining systems, CRUSA, ERUSA, and SERUSA, do not have a high potential demand for residential reuse because the region is characterized as rural. There are scattered residential subdivisions, which are older and do not contain reclaimed water lines. In addition, the wastewater treatment facilities in these regions do not have enough flow to supply sufficient reclaimed water to the area to make the capital outlay expense feasible. Currently, effluent disposal is through percolation ponds onsite and offsite. Based on the rural setting, few established subdivisions and limited change of large-scale subdivisions; it is not feasible, nor possible, under the current County ordinance to provide reclaimed water to existing residents. The potential for reclaimed water use will be addressed in each update of the region-specific Master Plan.

One of the main objectives of the updated conservation program will be an emphasis on the promotion of reclaimed water and alternative water supply exploration.

1.4.9 Environmental Aspects

To identify potential environmental impacts to existing legal users and natural systems, PCU contracts groundwater modeling services to evaluate any requested withdrawals for such impacts. Should modeling scenarios indicate potential affects, PCU works closely with the Water Management Districts to establish Environmental Monitoring Plans (EMPs) specifically designed to detect any actual impacts associated with the permitted

withdrawal rates. EMPs have been developed for the NERUSA, NWRUSA, SERUSA and the CRUSA. An EMP for the SWRUSA is currently in development.

1.4.10 Institutional and Political Factors

The Polk County Building and Codes Division requires the guidelines established for municipality in the Florida Plumbing Code. Through the Comprehensive Plan and Land Development, the County promotes the use of water conserving plumbing fixtures and Florida–friendly landscaping practices. Water efficient landscaping and irrigation requirements for non-residential development were addressed in revisions to the Land Development Code in 2003. Subsequently in 2009, additional landscape and irrigation requirements were adopted and became applicable to single family residential lots as well.

Polk County has adopted a *Flood Plain Ordinance (No. 00-009 Land Development Code)* as required to participate in the National Flood Insurance Program (NFIP) administered through the Federal Emergency Management Act (FEMA). All development is required to receive the proper building and site alteration permits. All new structures are required to be placed above the base flood elevation (when the base flood elevation is known). The County is also a participant in FEMA's Community Rating System and has received a Class 7 Rating.

The County has in place a *Water Shortage Ordinance No. 92-35*, which states that PCU will follow water restrictions in place by the water management districts, dependent on region. This Ordinance was issued in October 1992. PCU issued an *Emergency Ordinance for Water Supply No. 00-25* in June 2000. This Ordinance consolidates the water restrictions by proclaiming all PCU customers be governed by only the rules established by SWFWMD for consistency. Polk County's *Year Round Water Conservation Measures and Water Shortage Ordinance (No. 04-07)*, approved on February 18, 2004, allows for improved enforcement of watering restrictions as set by the SWFWMD and allows for localized limits on the use of reclaimed water that could be the same as irrigation standards for potable water. This ordinance authorizes law enforcement officers and representatives of any agency from within Polk County to levy fines for violations. *Sections 8 and 9 of Polk County Ordinance No. 04-07* were amended by *Ordinance No. 09-050* providing a more expeditious and efficient means of administering the Water Shortage Ordianance. Currently, cases are handled by a Codes Enforcement Officer position funded by PCU and by Environmental Deputies from the

Polk County Sheriff's Office. Stronger watering restrictions were implemented in our Northeast Regional Utility Service Area in order to further conserve water.

On March 5, 2003, the County adopted *Ordinance No. 03-21 the Polk County Utilities Code*, which included regional water conservation plans for the six (6) PCU's service areas. As indicated in the Introduction, this MANUAL is intended to be an updated replacement of the previous six regional plans.

PCU's Reclaimed Water Program continues to be an integral part of the Polk County's conservation efforts. Connection requirements related to the County's reclaimed water system may be found in the Reclaimed Water Policy Manual, Section 4.2: Requirement to Install Onsite Distribution and Irrigation Systems. The cost to the customer for using PCU's reclaimed water service is currently lower than for using potable water service.

The Polk County Board of County Commissioners (BoCC) has also created a Water Policy Committee, whereby the BoCC will be able to take a leadership role in protecting and developing the County's water resources for the benefit of its citizens and environment. Since the adoption of the Water Policy Advisory Committee in early 2003, PCU has commenced metering and charging for reclaimed water, implementing a water shortage ordinance and coordinating The Heartland Water Alliance between Polk, Hardee, and Highlands Counties. In addition, the Polk County Water Alliance between the County and the municipalities within the County may further assist the water management districts in integrating the cities and utilities toward incorporating uniform guidance standards for water conservation efforts and future water supplies.

1.4.11 Financial Resources

PCU budgets considerable funds every year for water conservation activities. PCU also applies annually and receives Community Education Grants to help with the costs of public education events for water conservation awareness. To date, PCU has partnered with the SWFWMD and SFWMD on a number of Cooperative Funding agreements to fund reclaimed water ground storage reservoirs, transmission mains and pumping systems as well as a Low-Flow Toilet Rebate Program. The County will continue to explore such opportunities in order to fund additional projects.

1.4.12 Fiscal Structure

PCU has an inclining block water conservation rate structure. The current rate structure is provided as **Appendix A.**

1.4.14 Potential Problems with Conservation

PCU is implementing this MANUAL to protect future water resources from overuse and to meet regulatory criteria. The success of the MANUAL largely depends on the attitude of the public and the individual customer's commitment. Initial enthusiasm does not guarantee continued efforts to conserve water. Therefore, the County must devote sufficient resources to the promotion of a program that is focused on changing the attitudes of the public toward water conservation by educating them on issues such as declining aquifer and lake levels and eliminating water wastefulness.

Enforcement has been especially difficult because there is limited staff. The public information programs have been restricted by a lack of funding and low attendance at water conservation workshops. Current cost-effective plans for expanding the promotion and marketing of our program will include developing a Conservation web page accessible from our Polk County website, sponsoring video conservation messages on a local television channel, Polk County Government Television (PGTV) which is carried on three (3) cable television suppliers and increasing public outreach opportunities through Polk's Nature Discovery Center at Circle B Bar Preserve.

1.4.15 Public Relations

The awareness of the public is considered one of the most important aspects of a water conservation plan. PCU's Public Information and Education Program previously consisted of brochures, pamphlets, and public workshops. In 2003, PCU expanded water conservation efforts throughout the County. From the first annual water conservation art contest to specialized logos on PCU vehicles aimed at sending a strong conservation message to our customers, PCU strived for cost-effective ways to support our efforts on demand reduction.

In 2003, PCU partnered with Anne Yasalonis of the Polk County Extension Office to jointly present water conservation and efficient landscape irrigation information at a number of public events. This effort has been expanded to include activation meetings for potential reuse customers as subdivisions are brought on to the reclaimed water system. In addition, PCU co-sponsored a conservation program on public television entitled, "Water's Journey" along with 145 public service announcements emphasizing the need for water conservation. The County Extension Office, in cooperation with the Community Education Grant Program of the Peace River Basin Board of SWFWMD, also provided funding to implement a Demonstration Florida-Friendly Landscape Garden at the main Utilities Administration building.

PCU maximizes water conservation opportunities by submitting its own projects to SWFWMD's Peace River Basin Board for consideration in the Community Education Grant Program. This annual grant has assisted PCU in the implementation of a conservation give-a-way program that has resulted in the distribution of thousands of educational brochures on conservation, rain gauges, leak detection kits, low-flow showerheads, and faucet aerators. Since 2003, PCU has sponsored an Annual Water Conservation Art Contest for students in grades K through 12. Submissions are judged on presentation of water conservation message and originality. Winning entries are awarded with ribbons and are showcased in an annual Water Conservation Calendar, also published by PCU. This activity is highlighted every year during PCU's display for National Public Works Week in May.

In addition to the promotional ideas listed above, PCU is currently considering several avenues of marketing our water conservation programs. "Bill stuffers" were used in 2008 to promote the District's Water CHAMP program for restaurants and hotels/motels. Future programs under consideration are:

- Posters for placement in public libraries, PCU customer service offices, and other county offices to reinforce the availability of a particular program as well as to keep the overall conservation message in the minds of the public;
- Press releases to local papers and radio stations on upcoming public events sponsored by PCU;
- Messages on customers' water bills;
- Promotion on Polk County's tourism website.

2.0 REVIEW OF CURRENT WATER CONSERVATION MEASURES

2.1 Water Conservation Measures

PCU is currently implementing water conservation measures from the previous editions of the Regional Water Conservation Plans as prepared by Boyle Engineering Corporation, dated November 2002. Although some of the measures are difficult to quantify in terms of water savings, these measures are beneficial and have assisted the County in identifying, promoting and even implementing other programs which do have quantifiable benefits. These points are highlighted below for each measure. The County will continue to fund these efforts as they are essential to having a complete and successful Water Conservation Program.

A) Public Information and Education Program
B) Promotion of Florida Friendly Landscaping

C) Conservation Oriented Rate Structure
D) Evaluation of Codes, Regulations, and Ordinances
E) Increased Code Enforcement
F) Leak Detection and Meter Testing/Replacement
G) Water Policy Committee
H) Rebate Programs
I) Alternative Water Supply Projects/Reclaimed Water Program

2.2 Water Conservation Benefits and Savings

As indicated above, most of these programs are difficult to describe in terms of measurable benefits. For those programs that are measurable, preliminary results from the NERUSA indicate that the largest savings are achieved through the conservation rate structure and the Reclaimed Water Programs. The NERUSA is used as an indicator of success due to its history of extraordinarily high per capita usage and ability to participate in all the above-listed programs. In the NERUSA, it appears that the rolling annual average per capita water use has dropped primarily due to the effectiveness of the above-listed water conservation programs. Currently, all of the RUSAs are reporting per capita usage below the 150 gpcd District's standard and every effort will be used to maintain per capita figures below the 150 gpcd standard. PCU has been working on appropriate methods of monitoring the effectiveness of each measure. The most important indication of effectiveness in the data evaluated is that while growth and population increases are continuing to occur in the NERUSA, PCU's water conservation efforts have managed to keep the annual average per capita rate relatively constant.

The benefits for the conservation measures currently being implemented in all service areas are as follows:

2.2.1 Public Information and Education Program

Public Education is the most important element of any water conservation plan. Water waste by residents can be positively affected through simple education. This program is multi-faceted, providing information to customers on how to implement some of the water saving measures on their own. While the actual water savings for these customers cannot be readily quantified, the effectiveness of the information provided would be the same for customers who implemented a project on their own as it would be if they had participated in a project implemented by the County. Most residents become interested in adopting water conserving measures when they are informed about the water resource concerns. PCU's customer service offices all have informational flyers on display for the

public to assist customers with: retro-fitting with low-flow emitters, replacing high-flow toilets; planting Florida-Friendly Gardens, installing or retro-fitting with low-flow irrigation systems, as well as conservation publications aimed at making conservation fun and exciting for children.

PCU's water conservation educational program for children has been a tremendous success in getting the conservation message out to the public early, while good habits can be taught and bad habits can be avoided. PCU recently won an award from AWWA for our annual Water Conservation Art Contest and resulting Water Conservation Calendar. This subprogram attracts an average of 300 student artists throughout the county and results in distribution of 3,000 calendars annually. Each calendar month highlights a selected student's artwork and includes tips on how to conserve water, most of them specific to the season.

PCU actively participates in a number of public events held annually by Polk County. Water, Wings & Wild Things – Polk Naturefest is local version of National Earth Day, with attendance estimated at 4,000 guests. PCU promotes Water Conservation by having a question/answer program whereby the guest answers a conservation question and their correct/incorrect answer is recorded. Then, they get to spin a prize wheel and receive whichever prize is won, which is always a low flow/conservation item or a conservation awareness item. The answers received are reviewed and assist PCU in determining what areas need more attention for public education efforts. Other public events drawing thousands of participants include Public Works Week (PWW), where PCU's presentation also includes more in-depth information on the services we provide, and the Polk County's Citizen's Academy, where PCU can inform interested citizens about the necessity of water conservation, as well as the services that are provided.

2.2.2 Promotion of Florida Friendly Landscaping

In recognition of the volume of water waste that can occur due to residential landscape irrigation, PCU has managed appropriate resources to efficiently design, construct and maintain a Florida-Friendly garden at the Utilities Administration office. Photographs and maps of the garden are displayed at public events through the County Extension office, at landscaping classes and during the Citizen's Academies held by Polk County Board of County Commissioners. As a picture is worth a thousand words, a live example speaks volumes in illustrating how beautiful and functional a Florida-Friendly garden can be to customers who may have preconceived ideas or bias to changing from a high-water use lawn. Details on different irrigation systems that would be appropriate in different microenvironments are also provided.

2.2.3 Conservation-Oriented Rate Structure

Upon implementation of the first adoption of water conservation rates in July of 2003, PCU noted an immediate reduction in per capita water use in all RUSAs. While there is still an increase of water use during the drier months, the relatively constant rolling annual average per capita water use indicates that the water conservation rate structure is helping to keep usage down overall, even during the dry months.

2.2.4 Evaluation of Codes, Regulations, and Ordinances

As supported by the District, the County has made significant advances in updating it Utilities Code, watering restriction regulations and landscape ordinance to help enforce our water conservation efforts. While these few examples are recent demonstrations, developing such tools for changing people's perspectives and habits on water use have been years in the making. Polk County Utilities will continue to review existing policies, codes and ordinances to keep pace with developing technology, new information and regulations, and results of collected data on older methodologies. These tools help policy-makers demonstrate where focus is needed and guide financial planning efforts to be more cost-effective. Without this, many of the water conservation programs in place for PCU would not have been possible.

2.2.5 Increased Code Enforcement

Enforcement of water use restrictions is outlined in Polk County Ordinance No. 04-07 and amended by Polk County Ordianance No. 09-050. Ordinance 09-050 authorizes law enforcement officers and other representatives as directed by the County Manager within Polk County to issue Written Warnings, First Violation ($50.00), Second Violation ($200.00), Third and Subsequent Violations ($500.00), Gross Water Waste Violations ($1,000.00). The Polk County Board of County Commissioners approved the establishment of a Code Enforcement Officer position, funded by Utilities, to enforce water use restrictions. The position has been filled and the individual began enforcement efforts on June 30, 2003. The local press has been providing significant coverage of our enforcement efforts in the NERUSA. In addition to the Code Enforcement Officer, the Polk County Sheriff's Office (PCSO) began enforcement of the District's water use restrictions beginning May 23, 2003. Citation reports have been linked to PCU's customer service consumption files for reporting of trends associated with those accounts receiving citations. Program analyses for the Codes Enforcement efforts show that the annual average daily flow savings are estimated to be 124 gallons per day per connection

(more than 45,000 gallons per year per violation). For the PCSO violators, the annual average daily flow savings are estimated to be 193 gallons per day per connection (more than 70,000 gallons per year per violation).

2.2.6 Leak Detection and Meter Testing/Replacement

PCU has replaced all older-model residential water meters with Automated Meter Radio (AMR) reading devices. These AMR devices have the capability of detecting continuous water flow. When the meter detects a period of 24 hour continuous flow, and the meter continues to record these conditions, data is reported to PCU during the monthly meter reporting of the finding. This enables PCU to notify the consumer, in writing, that a leak and/or continuous flow has been detected. Additionally, residential meters are replaced every ten (10) calendar years during a preventative maintenance program for accuracy.

2.2.7 Water Policy Advisory Committee

The Polk County Board of County Commissioners (BOCC) appointed a volunteer citizen Water Policy Advisory Committee (WPAC) in 2001. This committee meets approximately every six weeks to advise the Board on water related issues. In addition to the development of a general County Water Policy, they have developed a more detailed Water Reuse Policy that has subsequently been adopted by the Commission. Since the adoption of this policy in early 2003, Polk County has commenced metering and charging for reclaimed water and has implemented a water shortage ordinance. The goals of the committee are summarized in the in the official Water Policy, which was adopted by the BOCC on December 17, 2003, and is included as an exhibit in the Water Conservation Plan. The Year Round Water Conservation Measures and Water Shortage Ordinance (Ordinance No. 04-07), approved on February 18, 2004, facilitates the enforcement of watering restrictions and limits the use of reclaimed water to the same irrigations standards for potable water.

The Water Policy Committee operates as a clearing house for the promotion of important resource management ideas and goals for Polk County. The effectiveness of such an entity can be qualified in terms of the momentum generated by the Committee in pushing conservation goals and programs forward throughout the County. Once a program or goal is established as being supported by the Water Policy Committee, it generally receives approval for implementation by the BOCC. As such, the Committee has and will continue to be a tremendous resource to PCU for generating support of various programs and projects needing BOCC approval.

2.2.8 Rebate Programs

PCU sponsored a Rain Sensor Rebate Program (2003-2004) and a Low-Flow Toilet Rebate Program (2004-2005) in all six (6) PCU service areas. A total of 207 rain sensors and a total of 413 low-flow toilets were installed.

The rolling annual average water usage for those customers receiving rain sensor rebates indicate an average savings in water usage of 49 gallons per day (nearly 18,000 gallons per year per home having a rain sensor). Water use savings from the Low-Flow Toilet Rebate Program indicate an average savings in water usage of 11 gallons per day (over 4,000 gallons per year per toilet replaced).

2.2.9 Alternative Water Supply Projects/Reclaimed Water Program

Locations in PCU's RUSAs with a reclaimed water connection show a decrease of as much as 57% of their annual average potable water usage after connecting to the reclaimed system. This equates to an annual average water savings of 308 gallons per day, or approximately 163,520 gallons per connection per year.

3.0 PLANNING GOALS AND OBJECTIVES

3.1 Reduce Unaccounted Water Losses

Unaccounted for water is a serious problem to face a utility. PCU is committed, on a continuous basis, to investigate all incidences and causes for unaccounted for water.

3.1.1 Billing

Billing is accomplished with PCU's conservation rate structure on the administrative side. Most unaccounted for water can be identified through increased communication between the PCU Divisions and discrepancies in billing data versus flow data. PCU purchased a new system for billing operations in late 1999 that has helped alleviate some unaccounted for water. Continual reductions in unaccounted water loss due to billing errors must be achieved through routine review of account codes and ensuring appropriate designations for the PWS serving each account.

3.1.2 Leak Detection and Elimination of Illegal Connections

Specific information regarding the location of all main line connections is not available. Ground-Penetrating Radar (GPR) is now utilized to locate all unmapped water line connections. Global Positional System is also used by inspectors to assist in mapping all available water lines. Inspections should be increased to eliminate tie-ins to existing active lines prior to payment of connection fees and meter sets. Water pumpage records are continually reviewed and compared to billing records to systematically identify unmetered connections.

3.1.3 System Flushing

A portion of the non-metered water use within PCU's RUSAs is routine system flushing. Intermittent water quality issues at the treatment facilities and throughout the system necessitate the routine flushing. The resolution of such water quality treatment and distribution issues through implemented capital investment projects could help achieve withdrawal reduction and alleviate the need for system flushing. In the interim, system flushing must be properly recorded and reported to the appropriate staff for inclusion in the water use reports.

3.1.4 Line Breaks

A program for reporting all line breaks is in place and water loss is estimated and recorded by the PCU Operation and Maintenance Division. Line breaks are recorded on an individual basis by Operations personnel. Initial reports are generated by customer calls or Operations staff detection. These reports are completed by the field staff who are investigating the event and are turned in daily, along with a separate water loss report, if applicable. The water loss data is tracked in a database for later use in the Annual Public Supply Surveys. The incident report is completed in a work order system database for developing preventative maintenance programs and tracking costs.

3.2 Reduce Total Usage

3.2.1 Public Education

PCU will continually add to its public information and education program. Currently, brochures providing information on the importance of water conservation are available to customers. The use of pamphlets is geared towards residents who can alleviate individual water waste. Teachers are currently required to present water conservation materials as

part of the curriculum. PCU will assist the Polk County School Board by supplying conservation material that is geared appropriately toward children in schools. The importance of water conservation will be stressed while making conservation "fun" and therefore appealing to children.

Additional public information and education program methods and audiences will be developed on both long-term and short-term water conserving practices. Staff members of PCU have been available to speak to schools or other groups whenever requested. A formal community announcement of the Water Conservation Advisory Committee will provide public awareness of the County's goals. When financially feasible, through possible donations/assistance, the County plans to organize additional public service announcements and water conservation events with demonstrations and conservation handouts and/or promotional items. The month of April, "Water Conservation Month", the second week in May, "Drinking Water Week" and the third week in May, "Public Works Week" will continue to be recognized by PCU.

This program will be enhanced through numerous proactive endeavors. Given the area's growing population, the County will continue education efforts and reinforce a conservation ethic aimed at changing water use habits for the future.

3.2.2 Evaluation of Codes, Regulations, and Ordinances

The County will continue to follow water conservation plumbing codes and landscape ordinances in the Comprehensive Plan, Conservation Element, Section 2.306-B: D: Water Conservation and Reuse Program (Appendix 1). The plan requires low-volume water conserving plumbing fixtures and Florida Friendly Landscaping with drought-tolerant native vegetation (Revised August 2000) as set by the Florida Statutes (Revised by CPA-99B-32 and Ordinance 99-80 as adopted by BoCC on December 15, 1999).

Florida-Friendly Landscaping requirements have been adopted by the Polk County Board of County Commissioners as part of a revision to the Land Development Code in 2009 (Revised by Ordinance 09-006 on March 18, 2009). These requirements will be reviewed periodically for water use efficiency by a team of key County staff.

PCU will continue to follow water use restrictions declared by SWFWMD. County Ordinance #00-25 lists all of the water shortage problems associated with the area: low well water levels, low water pressure that could hinder firefighting efforts, and irrigation that is excessively high and nonessential.

Continuation of the Water Policy Advisory Committee will provide a forum for public input, as members of the public will be included as well as PCU staff, and regulatory interests. The opportunity for public input can also be provided at proposed workshops and public education events. In addition, PCU responds to customer input on a daily basis and will continue to do so.

3.2.3 Conservation Oriented Rate Structure

PCU's current inclining block water conservation rate structure is provided within **Appendix A**. PCU will constantly be reviewing the rate structure for its effectiveness in encouraging water conservation.

3.2.4 Fiscal Incentives

PCU will constantly be reviewing the rate structure for its effectiveness in encouraging water conservation. Any modifications to the existing rate structure that are deemed necessary to promote the conservation of PCU's water resources will be presented to the Board of County Commissioners (BoCC) for approval.

3.3 Improve Quality of Service

A goal of any utility's Water Conservation Program should be to implement the most efficient and cost-effective measures aimed at reducing water waste without lowering the quality of service to the utility's customers. This section was provided to assert the County's position to always keep that in the fore front as we plan and implement these programs. This will be accomplished by providing prompt responses to customer concerns and making provisions for adequate staffing to perform these programs.

3.3.1 Prompt Response

Prompt response is the greatest priority for line breaks and leaks. PCU responds immediately to these emergencies to prevent loss of life or property through diminished pressure in the distribution system and to limit the needless loss of water. PCU is also committed to responding quickly to customer requests for assistance when they have received a larger than normal bill or experienced some water loss.

3.3.2 Staff

Staff is readily available to assist with water conservation issues. The Utilities Environmental Manager, in the UtilitiesTechnical Services Division, devotes time and staff to the implementation of these conservation measures, as well as other water resource issues. Public input will be utilized to assess the most favorable way to develop involvement with the community. PCU will continue to host public events including Water Conservation Workshops in conjunction with SWFWMD and the City of Lakeland, Earth Day, and Public Works Week activities in conjunction with other public agencies. In addition, PCU will continue to participate in Town Hall Meetings at which water conservation information and give-aways will be provided to interested participants.

While Polk County has established a Water Policy Committee for County-wide water resource issues, a water resource and conservation committee within PCU is proposed to evaluate the success of the water conservation measures that PCU will put into practice. Reclaimed water usage, potable water usage, and other important information are to be documented in progress reports with suggestions to the local government from the committee. Within PCU, key staff members from each of PCU's four divisions will establish appropriate measures for the water resources under the control of PCU.

3.4 Expand Service Area and Supply Capabilities

3.4.1 Population

The existing population projections, approved through the appropriate water management district, for each service area are provided in the appropriate appendices. The overall population increase necessitates the implementation of the reuse and water conservation methods to help alleviate some of the demand placed on the increasing volume of groundwater withdrawal. In 2006, PCU began implementing a capacity tracking program that has provided for a more efficient planning of water resources.

3.4.2 Facilities

Implementation of water conservation methods increases the efficiency of a utility. Increasing water efficiency through conservation efforts will have several benefits. The need for additional water and wastewater infrastructure will be delayed. In addition, decreasing the demand placed on our groundwater resources will extend the availability of the supply.

3.4.3 Reclaimed Water

The potential for reclaimed water use, in areas where reclaimed water service is not currently available, will be addressed in future updates of the Master Plan for each region.

3.4.4 Desalination

Not applicable for the current raw water quality of PCU's wells or the location of the County's infrastructure from a salt water intake feature.

3.4.5 Shallow Wells

The use of shallow wells is discouraged due to the possible influence of surface water in the surficial aquifer and what affect it may have on the health of the general public. In addition, PCU has been in discussion with District staff members regarding the potential impact a large number of individual shallow wells may have on the surficial aquifer locally and consequently, adjacent environmental features such as lakes, streams and wetlands. Accordingly, the County is reviewing alternatives to shall wells and intends to adopt policies that would discourage the use of these wells within the County's utility service areas, as appropriate.

3.4.6 Deep Lower Floridan Aquifer Wells

PCU has partnered with the Peace River Basin Board of SWFWMD for the exploration of the Lower Floridan Aquifer as a potential additional water supply source in the NERUSA. The project has been completed but will require additional testing to determine its suitability as a sustainable water supply source. In addition, the SFWMD has partnered with PCU to drill another well in the SERUSA. Pending suitable water quality results, the Lower Floridan Aquifer may provide future water supplies to the southeast region of Polk County as well.

3.5 Benefits versus Costs

SWFWMD recommends that municipalities investigate the benefits and costs of water conservation measures before implementation. PCU plans to carefully choose measures capable of meeting water conservation goals and objectives without incurring unnecessary costs. Through preparation of this plan, agencies and municipalities were contacted to review water conservation practices for similarly sized public supply facilities. Professional

experience of the contacted individuals led to practical estimations of water savings for specific methods of conservation. The following list highlights these findings:

3.5.1 System Efficiencies

a) Leak detection is viewed as essential maintenance of a system, but not necessarily as a water conservation method. All water supply permittees within the SWUCA shall implement water audit programs within 2 years of permit issuance. Water audits which identify a greater 12% unaccounted water shall be followed by appropriate remedial actions. A thorough water audit can identify what is causing unaccounted water and alert the utility to the possibility of significant losses in the distribution system. A utility expert recommended annual Water Audits (<8% Unaccounted for Water-UAW usually means there are no significant leaks) and Leak Detection Survey (required if UAW is >12%).

b) Many municipalities have a progressive toilet/showerhead replacement program, retrofit, and irrigation program. Retrofit usually entails high costs to the customer and utility, however, toilet and showerhead programs may be eligible for funding assistance through the District's Cooperative Funding Initiative Program. Faucet water use can be reduced by up to 50% with a low-flow faucet or faucet aerator. Years of program data indicate the cost benefit for these programs is less than $2.00/1,000 gallons, including program administration.

c) O&M personnel recommend testing and calibrating large meters leaving the Water Treatment Plant for proper function. For public supply utilities, usually large meters (3" and up) make up ½ of 1% of pipeline. However, they make up approximately 30% of the total billable flow. Their maintenance should be a priority.

d) Literature from SWFWMD documents a study done for a similar area, Highlands Ridge. Residential water audits for indoor and outdoor use were estimated to cost $39.00 (1989). The study indicates that low flow showerheads can reduce per capita water use by 9.7% or 7.8 gpcd if all are replaced for the home. Outdoor audits resulted in a reduction of irrigation by 39%.

e) Residential irrigation and landscape audits resulted in 10% overall reduction in water use for a study done in Tampa, FL. Irrigation audits have been contracted out at a cost of $162 per residence and the landscape evaluations at $75 per residence (1995).

f) A water utility near Tampa, Florida credits a decrease in gpcd to an aggressive inclining rate structure, updated annually. The customer monthly bill is highly detailed, and displays how much water was used in each price level. They are investigating implementing a surcharge for the dry season. Water use since implementation of water conserving rate structure and toilet replacement:

- 1989=146 gpcd
- 1999=103 gpcd
- 2001=110 gpcd (due to an increase in new development)

g) To date, the SWFWMD research on soil moisture sensors has shown a water savings of 28% to 92%, depending on weather conditions.. It was noted that these types of sensors would be applicable to seasonal residences since they require virtually no maintenance. The appropriate cost (parts and labor) for the addition of simple sensor systems to an existing irrigation timer is about $250-$350 per installation. It is recommended that PCU seek cooperative funding from the Districts for these programs.

4.0 MEASURES AND IMPLEMENTATION

4.1 Demand Management

Demand management will be carried out with prescribed decided actions and time schedules. The following measures are required by the Water Management Districts as part of an approved MANUAL: Regulatory measures include plumbing and landscaping codes, irrigation and water use ordinances. Economic measures include metering, charge rates, impact and connection fees, and incentives. Educational measures include informational programs. Operational measures include distribution efficiency, reuse, enhanced supply and storage, monitoring and record keeping, and forecasting.

4.1.1 Regulatory Measures

a) Water Efficient Plumbing Fixtures & Landscaping Codes:

The Polk County Building Department requires and enforces the guidelines established for municipalities set in the 1994 Standard Plumbing Code (amended by Ordinance 98-02). These standards apply to all new and replacement plumbing fixtures. All toilets manufactured since 1995 use 1.6 gallons per flush or less. In FY2005, PCU implemented

a low-flow toilet program (1.6 gal/flush) and low-flow showerheads and faucets are distributed through public events with fixture discounts and/or rebates by PCU.

PCU promotes Florida Friendly Landscaping, as in FS 166.048, and promotes the use of drought-tolerant native vegetation for municipalities and residents in its Comprehensive Plan, Conservation Element. Rain sensors are required for any new automatic landscaping systems to prevent water waste. PCU implemented a rain-sensor rebate program to issue credits to those customers providing documentation that they had installed a rain-sensor on their automatic irrigation systems. The adoption of all necessary water conserving ordinances will apply to the entire County.

b) Water Conservation Rate Structure:

PCU will constantly be reviewing the rate structure for its effectiveness in encouraging water conservation. Any modifications to the existing rate structure that are deemed necessary to promote the conservation of the County's water resources will be presented to the Board of County Commissioners (BoCC) for approval.

This effort is ongoing.

c) Water Shortage:

In the event of a water shortage, as declared by the Southwest Florida Water Management District, the County has enacted an Ordinance to address these situations. The County has revised the current Water Shortage/Emergency Ordinance No. 00-25. The updated Ordinance No. 04-07 provides for the application and the authority to implement prescribed water restrictions and enforcement as specified by SWFWMD.

This plan is ongoing.

4.1.2 Educational Measures

a) Presentations and Speaker's Bureau:

Conservation staff will establish contacts with Polk County schools and interested groups to serve as a resource for water efficiency and water quality issues. PCU staff will be available for, or will coordinate, presentations and other activities upon request. Water plant tours are also coordinated.

PCU has and will continue to participate with SWFWMD on Earth Day, other agencies for Public Works Week, and to host Town Hall meetings where the promotion of water conservation measures can be demonstrated to large groups of interested participants.
The use of public service announcements, dependent on cost and available funds, will be explored. This would be especially desirable in Polk County, with its growing population.

This effort is ongoing.

b) Water Conservation Month, Drinking Water Week, and Public Works Week:

PCU staff will continue to coordinate various educational activities to recognize and celebrate Water Conservation Month (April), Drinking Water Week (the first full week of May) and Public Works Week (also in May). The Water Wise Council as a statewide campaign for promoting water conserving issues initiated water Conservation Month. The Governor recognizes the initiative by proclamation. Drinking Water Week is the international celebration of clean drinking water. National Public Works Week publicizes the importance of public works to the community. School students, PCU staff, and the general public are the target audiences and diverse educational materials will be developed for dispersal via mail.

This effort is scheduled for implementation in early February to mid May, each year.

c) Water Use Audits:

Auditing water use is an essential component of formulating water efficiency strategies for a customer. The information gathered during an audit can also serve as a foundation for other projects within the utility. By employing modern technology and consultation, residential, commercial, and irrigation audits can be performed for customers showing higher than normal water bills.

This effort will be continued.

4.2 Supply Enhancement

4.2.1 Economic Measures

Accounting methods allow PCU to track water use through the revenue generated by water bills. The following accounting methods are ongoing programs for PCU.

a) Metering:

Accurate metering is essential to the utility's financial and production accountability. PCU will work cooperatively with related departments to ensure proper meter replacement, accuracy, and monitoring. It is the policy of PCU to test and calibrate residential meters every seven years. Commercial meters are tested and calibrated on an annual basis. New metering technologies will be evaluated on an as needed basis.

This effort is ongoing.

b) Unaccounted For Water:

PCU will work cooperatively with relevant departments to identify and account for water produced versus water delivered. As negative trends are identified, conservation staff will assist in problem solving activities. Quantitative and financial methods for monitoring aggregate water use are employed.

PCU has a program to search out "illegal" connections and seal them off. Since billing records are sorted by water system, PCU has instituted a program to compare pumpage records to billing records. Individual systems with high unaccounted for water use are then systematically evaluated for unmetered connections.

A portion of the non-metered water use within PCU's service areas is routine system flushing. This system flushing is necessitated by a significant number of long dead-end mains that serve very few customers and account for less than desirable water quality in some areas. The looping of these dead-end water mains is in PCU's 5-year Capital Expansion Program (started in 1991) and reduces the need for system flushes and the loss of water. This plan also allows for replacement of poor quality wells and the construction of water treatment.

This effort is ongoing.

c) Permanent Irrigation Ordinance:

PCU has adopted the rules of SWFWMD including Executive Order No. SEF 00-18. The District prohibits landscape irrigation during periods of high evaporation and further prohibits landscape irrigation system to be operated in a manner causing water to be wasted. The order prohibits irrigation between hours of 10:00 a.m. and 4:00 p.m., seven days a week. The orders of the District are authorized by F.S. 373.036 and reinforced by County Ordinance #04-07.

d) Leak Detection:

Utilities Operations and Maintenance detect leaks that can be identified as main breaks, operational practices, and other miscellaneous occurrences. As these types of incidents occur, PCU will assist other departments to ensure quantification for any water loss. PCU checks the systems for leaks that have documented discrepancies in water billing to meter readings. New leak detection technology will be evaluated in the future as needed.

This effort is ongoing.

4.2.2 OPERATIONAL MEASURES

PCU implements operational measures and practices to improve the PCU's efficiency. The following methods are ongoing programs for PCU:

a) Reclaimed Water Use:

Currently three of PCU's wastewater treatment facilities provide reclaimed water service. The effluent flow for the other facilities is disposed of via percolation ponds or sprayfields. PCU has researched the possibility of public access reclaimed water in these areas. However, at this time, due to the rural spread of Polk County in these areas, limited flows and the lack of new planned subdivisions for the area, reclaimed water service is not feasible.

b) Distribution Efficiency:

Distribution efficiency will be maximized as PCU's transmission systems are constructed and interconnected. When considering the age of much of the distribution system, it is in good condition due to sound maintenance practices. PCU has allocated a considerable portion of funds from the Community Investment Program to construct new and upgraded water distribution systems.

This effort is ongoing.

5.0 CONCLUSIONS AND RECOMMENDATIONS

In closing, this MANUAL provides guidance to PCU in planning, developing, and managing water use. The following recommendations are applicable to all of PCUs RUSAs:

- For PCU to continue to review and evaluate existing codes and ordinance to enhance water conservation;
- For PCU to maintain a dedicated water conservation staff whose responsibilities in the support of the MANUAL will include implementing the public information measures for presentations, Water Conservation Month, Drinking Water Week, Earth Day, and Public Works Week promotion and an Advisory Committee.
- For PCU to continue the pursuit of funding through the water management districts and other appropriate agencies for Community Education Grants and other Water Conservation or Alternative Water Supply projects.
- For the Utilities Customer Service Division to establish a comprehensive, documented program for large meter calibration.
- For the Utilities Operations and Maintenance Division to continue with an accurate program for determining water loss from line breaks, development tie-ins, and line flushing.
- For PCU to continual evaluate the effectiveness of the existing Water Conservation Rate Structures on both the potable water system and the reclaimed water system.

This Water Conservation Plan will be presented before the Polk County Board of County Commissioners (BoCC) for approval and adoption. It is anticipated that the BoCC will accept the plan in its entirety with implementation immediately following adoption. It is recognized that this Manual is a guidance document that can and will be modified as practices, technology, and feasibility warrants.

- Chapter 40D-2, Florida Administrative Code, Water Use Permit Information Manual Part D – Requirements for the Estimation of Permanent and Temporal Service Area Populations, Effective January 20, 2009.
- Chapter 62-550, Florida Administrative Code, Effective September 18, 2007.
- 1994 Standard Plumbing Code (Amended by County Ordinance No. 98-02).
- Polk County Comprehensive Plan, Ordinance 92-36, as amended.
- Florida Building Code, 2007.
- Florida Statutes 373.0391 - Technical assistance to local governments, 2008.
- Florida Statutes 166.048 - Conservation of water; Xeriscape, 2008.
- Polk County Land Development Code, Ordinance 00-09, as amended.
- Polk County Ordinance 04-09
- Polk County Ordinance 04-80
- Polk County Flood Plain Ordinance (Section 630 of the Land Development Code)
- Polk County Water Shortage Ordinance No. 92-35, October 1992.
- Polk County Emergency Ordinance for Water Supply No. 00-25, June 2000.
- Polk County Year Round Water Conservation Measures and Water Shortage Ordinance (No. 04-07), February 2004.
- Polk County Ordinance 09-050
- Polk County Ordinance No. 03-21 the Utilities Code Ordinance, March 2003 (Repealed).
- Polk County Official Water Policy, December, 2003.
- Polk County Ordinance No. 99-80, December 1999.

WATER CONSERVATION POLICY MANUAL

- Southwest Florida Water Management District Executive Order No. SELF 00-18 and Chapter 40D-22, Florida Administrative Code, Year-Round Water Conservation Measure, Effective date: September 2003.

WATER CONSERVATION POLICY MANUAL

APPENDIX A-200 **Index of Figures and Tables** December 2010

FIGURES (By Referenced Page Number)

TABLES (By Referenced Page Number)

APPENDICES (By Referenced Page Number)

FIGURE 1.

Utility Service Areas Polk County 2008

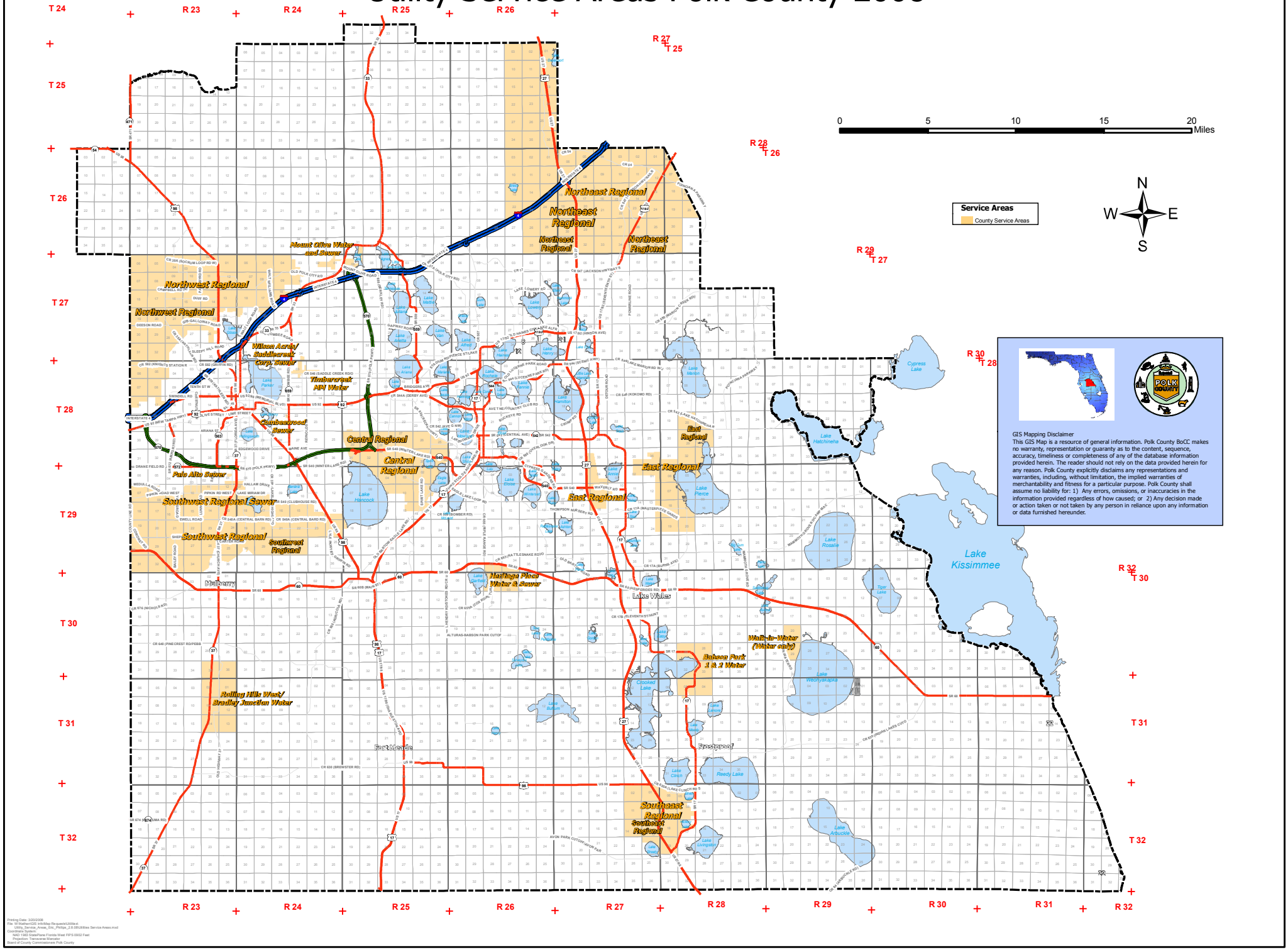

POLK COUNTY ENVIRONMENTAL RESOURCES DEPARTMENT

SOUTHWEST REGIONAL UTILITY SERVICE AREA
RECLAIMED WATER REUSE SYSTEM

SCALE: N.T.S.

FUTURE REUSE SITES

	PROJECT	POTENTIAL LOTS/UNITS	ACREAGE
B	BOB EVANS SOUTH LAKELAND	1	10.58
C	FAIRWOODS PH.2	50	5.81
D	CHRISTINA ANIMAL HOSPITAL	1	0.62
E	AMSOUTH BANK AT HOME DEPOT	1	1.30
G	SUNDANCE PROFESSIONAL CENTER EAST	1	2.05
H	SHADOW ESTATES	9	9.58
I	SOUTH LAKELAND VILLAGE -SWEETBAY	1	4.20
J	HIGHLANDS CREEK ADDITION	119	30.00
K	FESTIVAL POINTE @ SUNDANCE PH.2	60	20.81
L	HIGHLANDS GRACE	301	130.34
M	HALLAM PRESERVE WEST	150	98.39
N	BARCELONA	55	20.48
O	HERITAGE PARK	45	20.93
P	SUNDANCE PROFESSIONAL CENTER WEST	1	2.65
Q	GG'S PLAZA	1	6.08
R	HALLAM PRESERVES PH. 3	13	104.50
S	TOUCHSTONE SUBDIVISION	206	70.00

EXEMPTED REUSE SITES

	PROJECT	POTENTIAL LOTS/UNITS	ACREAGE
AA	CANTERWOOD	41	76.98

EXISTING DRYLINE REUSE SITES

	PROJECT	POTENTIAL LOTS/UNITS	ACREAGE
1	ASHLEY	17	13.12
2	ASHTON OAKS	45	25.16
3	BROOKSIDE BLUFF	23	10.00
4	CREWS LAKE TRAILS	28	10.00
6	HICKORY RIDGE ADDITIONS	74	38.65
7	HIGHLAND HILLS SOUTH	51	19.50
8	HIGHLANDS CREEK	70	27.33
9	HIGHLANDS RIDGE PH. 2	24	8.36
10	HIGHLANDS RIDGE PH. 3	26	8.08
11	VALLEY VIEW ELEM. WPF & OFFSITE	1	18.14
12	HARTFORD ESTATES	52	18.49
New 13	SOUTHSIDE VILLAGE	38	11.87
17	CHRISTINA CHASE	65	19.96
18	CRESCENT WOODS	58	30.25
19	ASHLEY ADDITION	21	17.70
21	CHELSEA OAKS (CARRIAGE HOMES OF LAKELAND)	208	44.63
22	VISTA HILLS PH. 2	54	14.35
23	HARTFORD ESTATES PH. 2	114	38.60
26	HALLAM PRESERVE EAST	229	201.87
28	TREYMONT	188	70.43

ACTIVE REUSE SITES

	PROJECT	POTENTIAL LOTS/UNITS	ACREAGE
A	AMANDA OAKS	44	23.60
B	CARLTON ARMS OF LAKELAND PH. 1	460	39.33
C	CARLTON ARMS OF LAKELAND PH. 2	440	39.00
D	EAGLEBROOKE PH. 1-3 & CLUBHOUSE	243	151.39
E	EAGLEBROOKE PH. 5A	48	8.44
F	GARDEN CENTER @ CHRISTINA PLAZA	1	8.59
G	HUNTINGTON @ SUNDANCE	292	24.38
H	GEORGE JENKINS HIGH SCHOOL	1	93.96
I	LEMANS APARTMENTS	72	15.20
J	LEMANS APARTMENT ADDITION	31	3.80
K	PRESSERVE @ SUNDANCE	109	22.87
L	PUBLIX @ IMPERIAL LAKES	19	15.20
M	REFLECTIONS WEST	99	33.44
N	SCOTT LAKE ELEM. WASTEWATER IMP.	1	14.14
O	ST. ANDREWS PLACE @ IMPERIAL LAKES	28	3.50
P	SHEPHERD COMM. UNITED METHODIST	1	10.11
Q	SHEPHERD OAKS CENTRE	1	1.70
R	SHEPHERD OAKS PH. 1	79	37.37
S	SHEPHERD OAKS PH. 2	40	14.07
T	SHEPHERD OAKS PH. 3	26	21.08
U	SHEPHERD RD. COMMERCIAL PH. 1-2	3	3.38
V	SUNDANCE VILLAGE 1 PH. 1	46	13.53
W	SUNDANCE VILLAGE 1 PH. 2	34	8.44
X	TIFFANY OAKS	6	4.50
Y	TWIN LAKES @ CHRISTIONA PH. 1 & OFFSITE	62	29.06
Z	TWIN LAKES @ CHRISTINA PH. 2	26	5.99
AA	VILLAGE @ EAGLEBROOKE	35	8.63
BB	VISTA HILLS	23	7.97
CC	WALGREENS @ 540A & LAKELAND HIGHLANDS	1	1.61
DD	WALGREENS @ SR37 & SHEPHERD ROAD	1	1.47
EE	WATER OAK	80	12.69
FF	WHISPER WOODS @ EAGLEBROOKE	57	18.90

ACTIVE REUSE SITES

	PROJECT	POTENTIAL LOTS/UNITS	ACREAGE
GG	EAGLEBROOKE GOLF COURSE	1	170.00
HH	IMPERIALAKES GOLF COURSE	1	110.00
II	RESERVATION LAKES GOLF COURSE	1	100.00
JJ	SHOPPES OF CHRISTINA	1	2.29
KK	RIVARD SUZUKI	1	3.69
LL	SHEPHERD ROAD CAR WASH (ANCHOR INVESTMENTS)	1	2.46
MM	EAGLEBROOKE PH. 2A	64	12.26
NN	REFLECTIONS WEST PH. 2	125	75.00
OO	PRESERVE @ SUNDANCE PH. 2	106	26.48
PP	SEVEN OAKS @ SUNDANCE	76	28.67
QQ	OAK LANDING	96	31.99
RR	EAGLEBROOKE NORTH	124	67.80
SS	HIGHLANDS IN THE WOODS	60	42.39
TT	FESTIVAL POINTE @ SUNDANCE PH. 1	75	141.02
UU	PARK RIDGE @ SUNDANCE	101	32.80
VV	VISTA HILLS EAST	14	20.38
WW	GRANDEFIELD ON POLEY CREEK	80	77.00
XX	GLENBROOK CHASE	91	28.10
YY	CHRISTINA COMMONS	1	2.40

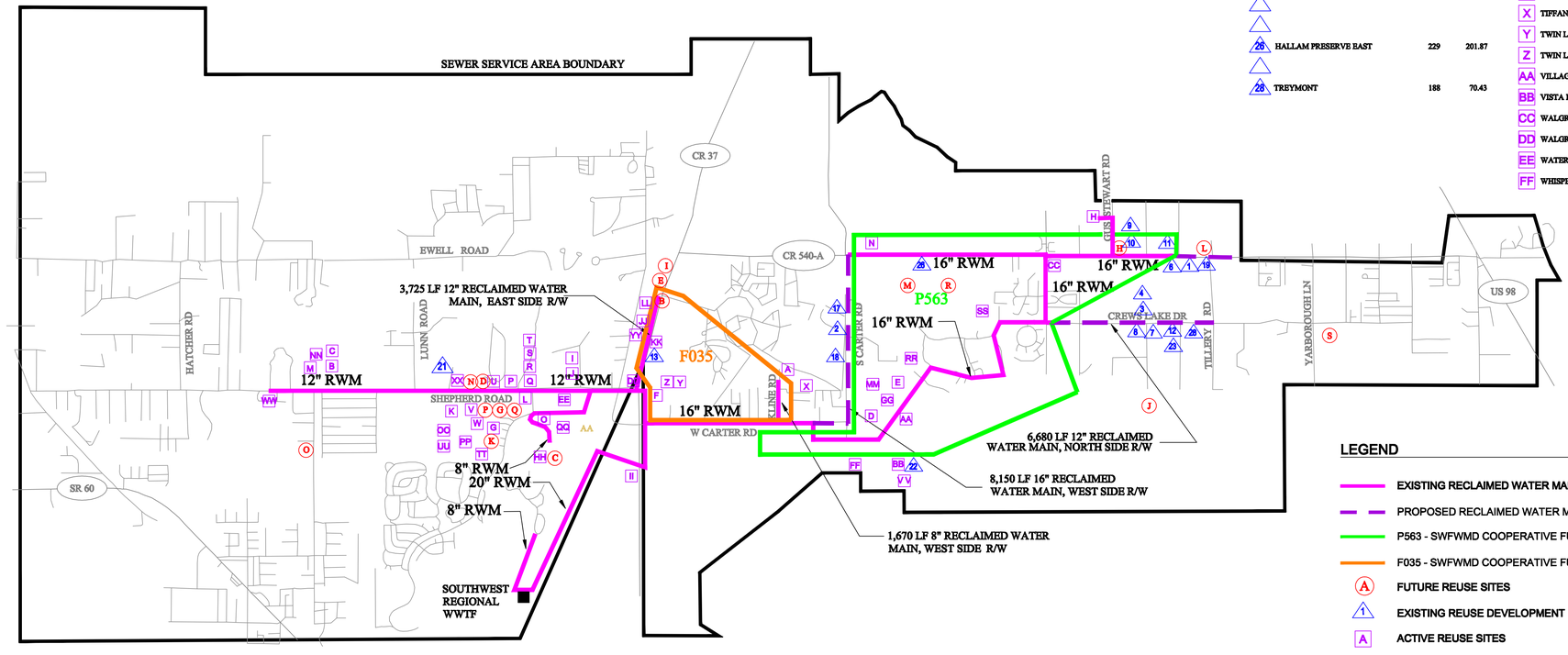

LEGEND

- EXISTING RECLAIMED WATER MAINS
- PROPOSED RECLAIMED WATER MAINS
- P563 - SWFWMD COOPERATIVE FUNDING GRANT
- F035 - SWFWMD COOPERATIVE FUNDING GRANT
- A — FUTURE REUSE SITES
- 1 — EXISTING REUSE DEVELOPMENT
- A — ACTIVE REUSE SITES

REVISED 9-19-2008, PCERD_Z. Lin

POLK COUNTY ENVIRONMENTAL RESOURCES DEPARTMENT
SOUTHWEST REGIONAL UTILITY SERVICE AREA RECLAIMED WATER REUSE SYSTEM

DRAFT

POLK COUNTY ENVIRONMENTAL RESOURCES DEPARTMENT
NORTHEAST REGIONAL UTILITY SERVICE AREA RECLAIMED WATER REUSE SYSTEM

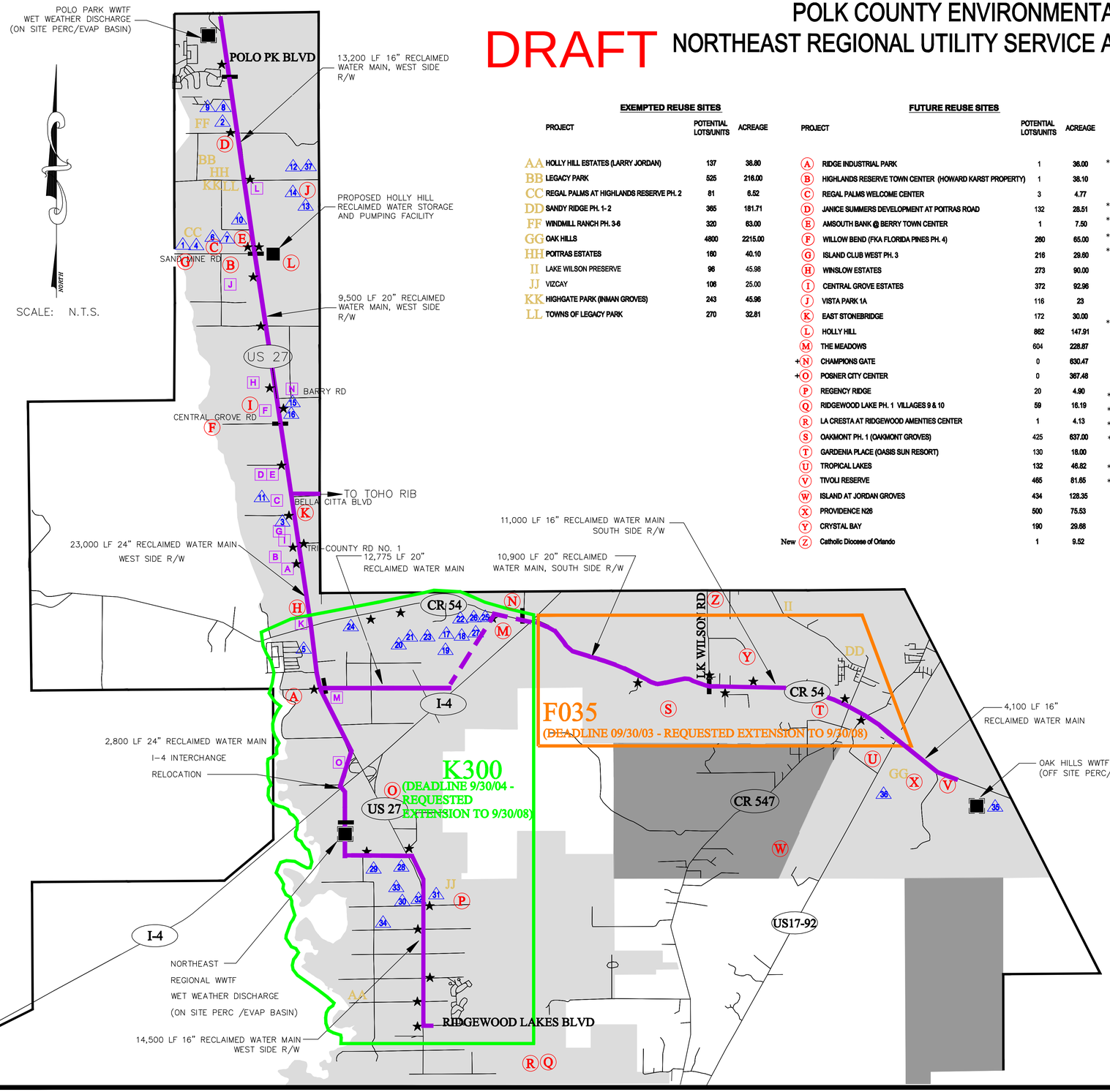

EXEMPTED REUSE SITES

	PROJECT	POTENTIAL LOTS/UNITS	ACREAGE
AA	HOLLY HILL ESTATES (LARRY JORDAN)	137	38.80
BB	LEGACY PARK	525	216.00
CC	REGAL PALMS AT HIGHLANDS RESERVE PH. 2	81	6.52
DD	SANDY RIDGE PH. 1- 2	365	181.71
FF	WINDMILL RANCH PH. 3-8	320	63.00
GG	OAK HILLS	4800	2215.00
HH	POITRAS ESTATES	160	40.10
II	LAKE WILSON PRESERVE	96	45.98
JJ	VIZCAY	106	25.00
KK	HIGHGATE PARK (INMAN GROVES)	243	45.96
LL	TOWNS OF LEGACY PARK	270	32.81

FUTURE REUSE SITES

	PROJECT	POTENTIAL LOTS/UNITS	ACREAGE
A	RIDGE INDUSTRIAL PARK	1	36.00
B	HIGHLANDS RESERVE TOWN CENTER (HOWARD KARST PROPERTY)	1	38.10
C	REGAL PALMS WELCOME CENTER	3	4.77
D	JANICE SUMMERS DEVELOPMENT AT POITRAS ROAD	132	28.51
E	AMSOUTH BANK @ BERRY TOWN CENTER	1	7.50
F	WILLOW BEND (FKA FLORIDA PINES PH. 4)	260	65.00
G	ISLAND CLUB WEST PH. 3	216	29.60
H	WINSLOW ESTATES	273	90.00
I	CENTRAL GROVE ESTATES	372	92.96
J	VISTA PARK 1A	116	23
K	EAST STONEBRIDGE	172	30.00
L	HOLLY HILL	862	147.91
M	THE MEADOWS	604	228.87
+N	CHAMPIONS GATE	0	630.47
+O	POSNER CITY CENTER	0	367.48
P	REGENCY RIDGE	20	4.90
Q	RIDGEWOOD LAKE PH. 1 VILLAGES 9 & 10	59	16.19
R	LA CRESTA AT RIDGEWOOD AMENITIES CENTER	1	4.13
S	OAKMONT PH. 1 (OAKMONT GROVES)	425	637.00
T	GARDENIA PLACE (OASIS SUN RESORT)	130	18.00
U	TROPICAL LAKES	132	46.82
V	TIVOLI RESERVE	465	81.65
W	ISLAND AT JORDAN GROVES	434	128.35
X	PROVIDENCE N26	500	75.53
Y	CRYSTAL BAY	190	29.68
New Z	Catholic Diocese of Orlando	1	9.52

EXISTING DRYLINE REUSE SITES

	PROJECT	POTENTIAL LOTS/UNITS	ACREAGE
* 1	ISLAND CLUB WEST PH. 1-2	255	69.17
2	WINDMILL RANCH PH. 1-2	189	70.00
3	WEST STONEBRIDGE	73	19.86
* 4	REGAL PALMS @ HIGHLANDS RESERVE PH. 1	130	13.92
* 5	FLORIDA CENTRAL PARK PH. 1-4	7	10.40
* 6	BERRY TOWN CENTER	1	32.07
* 7	PUBLIX @ BERRY TOWN CENTER	1	8.31
8	BIMINI BAY PH. 1	112	48.74
9	BIMINI BAY PH. 2	248	58.46
10	AMBERSWEET CENTER	4	10.25
11	FOUR CORNERS PH. 2 (1B)	132	39
* 12	BAHAMA BAY RESORT PH. A	116	14.35
13	VISTA PARK 1	53	17.21
14	VISTA PARK PH. 2	54	14.35
15	SOLANA	230	55.00
16	TIERRA DEL SOL (COMMON AREA ONLY)	972	121.39
* 17	ABBEY @ WEST HAVEN	58	89.19
* 18	GREEN @ WEST HAVEN PH.1	56	37.96
* 19	GREEN @ WEST HAVEN PH. 2	53	210.00
* 20	GREEN @ WEST HAVEN PH. 3	55	10.25
21	MANOR @ WEST HAVEN	57	18.23
* 22	SANCTUARY AT WEST HAVEN	133	40.24
* 23	HAMLET @ WEST HAVEN	123	25.54
24	BELLA TOSCANA	184	37.10
25	SHIRE AT WEST HAVEN PH. 1	101	40.60
26	SHIRE AT WEST HAVEN PH. 2	36	13.95
27	DALES AT WEST HAVEN	60	40.60
28	SUNSET RIDGE PH. 1	201	37.50
29	SUNSET RIDGE PH. 2	184	47.68
30	WESTBURY	100	67.18
31	AYLESBURY SUBDIVISION	40	9.66
32	SILVER PALMS	38	10.00
33	WESTBURY PH. 2	17	5.00
34	TIVOLI MANOR	35	9.50
35	SERENO PH. 1 (NATURE'S PRESERVE)	216	112.00
36	WATERSONG PH. 1 & 2 (COUNTRY CREEK PH. 1-2)	430	294.23
37	BAHAMA BAY RESORT PH. B-D	382	94.70

ACTIVE REUSE SITES

	PROJECT	POTENTIAL LOTS/UNITS	ACREAGE
A	VILLAGE AT TUSCAN RIDGE AND TUSCAN RIDGE PH. 2	175	125.00
B	TUSCAN RIDGE PH. 3	92	67.18
C	FOUR CORNERS PH. 1	234	69.92
D	CALABAY PARC UNIT ONE	161	56.47
E	CALABAY PARC UNIT TWO	162	58.68
F	FLORIDA PINES PH. 1-3	558	166.00
G	PINES WEST PH. 3	81	21.20
H	WESTRIDGE PH. 7-7B	170	45.70
I	PINES WEST PH. 1-2	161	40.50
J	HIGHLANDS RESERVE PH. 2-6	619	398.50
K	PARK 27 DISTRIBUTION CENTER	3	75.35
L	TUSCAN HILLS	160	33.34
M	DUNSON 27 COMMERCIAL SITE (CRACKER BARREL ONLY)	3	28.10
N	PALM KEY VILLAGE PH. 1-2	204	54.40
O	JARRETT FORD	1	5.10

LEGEND

N.T.S. = NOT TO SCALE
* = DEVELOPMENTS USING IRRIGATION (WELL) WATER VIA RECLAIMED LINES
\+ = NO LOTS/UNITS INDICATED IN PROJECT FILE AT THIS TIME

- EXISTING RECLAIMED WATER MAINS
- PROPOSED RECLAIMED WATER MAINS
- K300 - SWFWMD COOPERATIVE FUNDING GRANT
- F035 - SWFWMD COOPERATIVE FUNDING GRANT
- SFWMD GRANT
- AA EXEMPTED REUSE SITES
- A FUTURE REUSE SITES
- 1 EXISTING DRYLINE REUSE SITES
- A ACTIVE REUSE SITES
- ★ SCADA CONTROL LOCATIONS
- URBAN DEVELOPMENT AREAS
- URBAN GROWTH AREAS

REVISED 12-5-2006, PCERD_Z. Lin

POLK COUNTY ENVIRONMENTAL RESOURCES DEPARTMENT
NORTHEAST REGIONAL UTILITY SERVICE AREA RECLAIMED WATER REUSE SYSTEM

DRAFT

POLK COUNTY ENVIRONMENTAL RESOURCES DEPARTMENT

NORTHWEST REGIONAL UTILITY SERVICE AREA RECLAIMED WATER REUSE SYSTEM

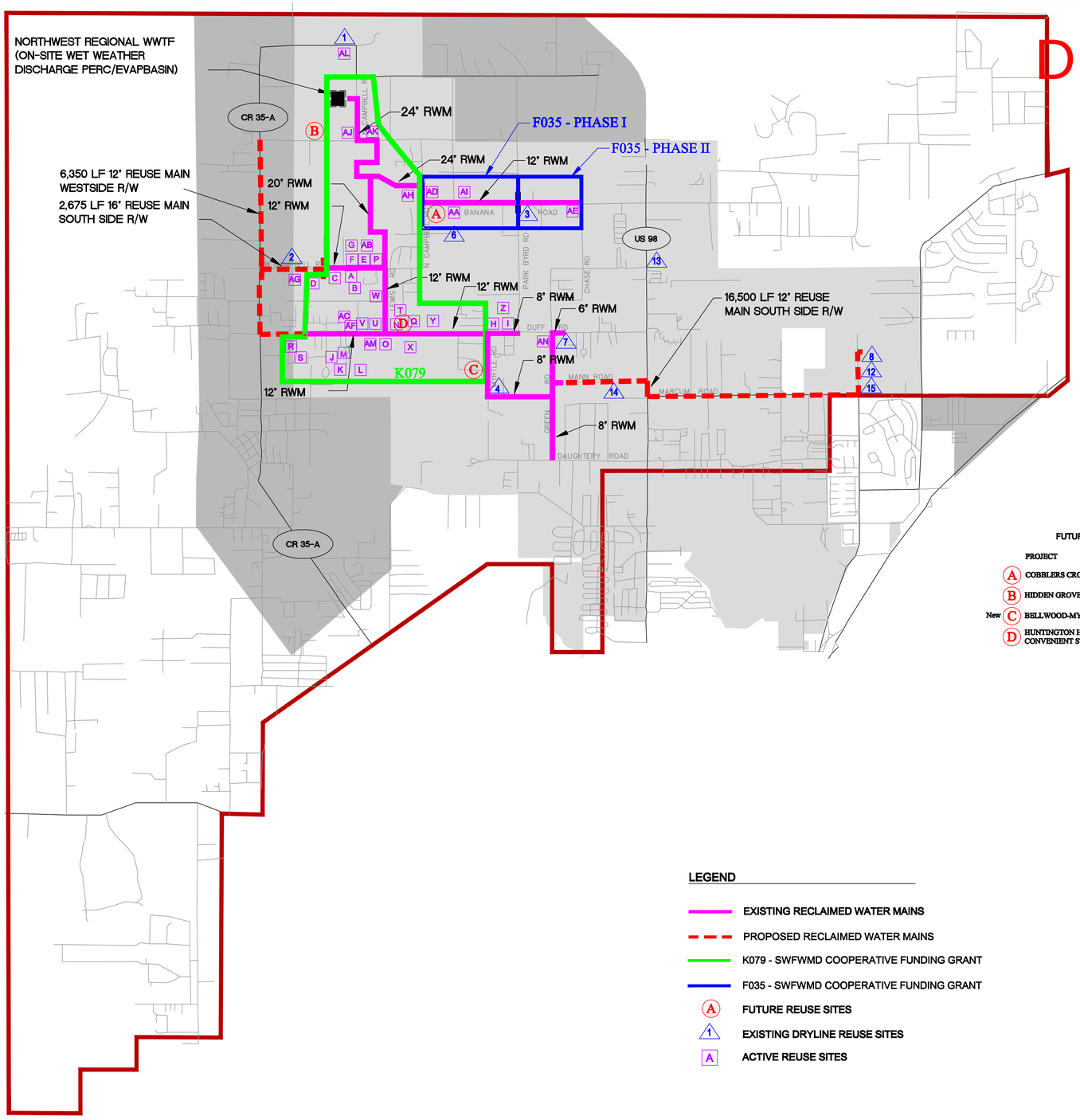

SCALE: N.T.S.

FUTURE REUSE SITES

	PROJECT	POTENTIAL LOTS/UNITS	ACREAGE
A	COBBLERS CROSSING	35	16.92
B	HIDDEN GROVE	145	49.48
New C	BELLWOOD-MYRTLE RD	22	10.64
D	HUNTINGTON HILLS PLAZA CONVENIENT STORE	1	0.57

EXISTING DRYLINE REUSE SITES

	PROJECT	POTENTIAL LOTS/UNITS	ACREAGE
New 1	CHASE HAMMOCK	6	15.20
2	ASHLEY POINTE	31	9.90
3	CHURCHWELL ELEMENTARY	1	27.88
4	KRENSON OAKS	78	28.97
6	LAKE JAMES PH. 2	43	14.69
7	CEDARCREST SUBDIVISION	94	22.80
8	HUNTER'S CROSSING PH.1	96	32.55
12	HUNTER'S CROSSING PH.2	126	39.98
13	PRINCETON MANOR	89	35.00
14	COUNTRY SQUARE	115	45.90
15	HUNTER'S CONNECTION	1	7.50

ACTIVE RECLAIMED WATER SITES/SUBDIVISIONS

	PROJECT	POTENTIAL LOTS/UNITS	ACREAGE
A	CANTERBURY	67	27.88
B	CANTERBURY PH. 2	54	14.77
C	GARDEN HILLS PH. 2	47	14.58
D	GARDEN HILLS SUBDIVISION	38	13.37
E	GRAND PINES EAST PH. 1	50	13.69
F	GRAND PINES SUBDIVISION PH. 1	42	20.00
G	GRAND PINES SUBDIVISION PH. 2	32	7.35
H	HUNTERS GREENE PH. 1	43	13.62
I	HUNTERS GREENE PH. 2	49	12.93
J	HUNTINGTON HILLS PH. 4 & 4A	35	12.44
K	HUNTINGTON HILLS PH. 4B	26	4.90
L	HUNTINGTON HILLS PH. 5	51	14.90
M	HUNTINGTON HILLS PH. 6	40	6.83
N	HUNTINGTON HILLS PLAZA	20	3.43
O	HUNTINGTON VILLAGE	60	15.70
P	MAGNOLIA MANOR	72	20.00
Q	PARADISE PLACE	16	5.00
R	REMINGTON OAKS PH. 1	50	29.39
S	REMINGTON OAKS PH. 2	47	12.89
T	RIDGE VIEW ESTATES	58	17.19
U	SUMMER OAKS PH. 1	56	28.65
V	SUMMER OAKS PH. 2	40	10.43
W	WESTON CHASE	13	3.84
X	HUNTINGTON HILLS GOLF COURSE & CLUBHOUSE	2	125.00
Y	HUNTINGTON RIDGE	101	33.28
Z	HUNTERS GROVE/GREEN PH.3	42	79.44
AA	LAKE JAMES PH. 1	85	64.75
AB	GRAND PINES EAST PH. 2	59	17.16
AC	HUNTINGTON SUMMIT	114	42.76
AD	HIGH POINTE NORTH	133	40.00
AE	DEVONSHIRE MANOR	135	37.80
AF	NORTHSIDE BAPTIST CHURCH	1	4.55
AG	ASHLEY ESTATES	59	16.30
AH	COPPER RIDGE	278	101.13
AI	HARRISON PLACE	106	38.20
AJ	PEBBLEBROOK ESTATES	117	37.00
AK	FORT SOCRUM VILLAGE	119	38.56
AL	WINCHESTER ESTATES	122	37.96
AM	SARATOGO	45	9.00
AN	HUNT FOUNTAIN PARK	1	35.00

LEGEND

- EXISTING RECLAIMED WATER MAINS
- PROPOSED RECLAIMED WATER MAINS
- K079 - SWFWMD COOPERATIVE FUNDING GRANT
- F035 - SWFWMD COOPERATIVE FUNDING GRANT
- A — FUTURE REUSE SITES
- 1 — EXISTING DRYLINE REUSE SITES
- A — ACTIVE REUSE SITES

REVISED 9-19-2008, PCERD_Z. Lin

POLK COUNTY ENVIRONMENTAL RESOURCES DEPARTMENT

NORTHWEST REGIONAL UTILITY SERVICE AREA RECLAIMED WATER REUSE SYSTEM

TABLE I.

POLK COUNTY UTILITIES

PUBLIC WATER SYSTEMS AND CORRESPONDING WATER TREATMENT FACILITIES (BY REGION)

REGIONAL UTILITY SERVICE AREAS	PUBLIC WATER SYSTEM (PWS)	WATER TREATMENT FACILITY (WTF)	NUMBER OF WELLS
Central	Lake Garfield PWS	Lake Garfield	2
	Central PWS	Gordonville	1
		Jan Phyl Village #2	1
		Tanamora	1
		Wolf Run	1
		Dinner Lake South	1
		Loma Linda	2
		Van Fleet	4
		Oak Hills	1
		Polo Davenport	2
		Berry Grove	1
		Edgehill	1
		Regal Inn	1
Northwest	Country Class PWS	Country Class	1
	Northwest PWS	Homestead	1
		Indianwood	1
		Lake Gibson	1
		Palmore	1
		Sherwood Lakes	1
		Timberidge	1
		Mann Road	1
	Consecutive Systems (4)	City of Lakeland	N/A
Southwest	Southwest PWS	Valley View	1
		Gus Stewart	1
		Pine Lake	1
		Turner Rd	1
		Haskell Homes	1
		Imperialakes	2
	Bradley Junction PWS	Bradley Junction	1
		Rolling Hills West	1
East	Waverly PWS	Polk County School Bd	1
	East PWS	Oak Acres	1
		Pleasant Acres	1
		Sun Air	1
		Timberlake	1
Southeast	Babson Park PWS	Babson Park #1	1
		Babson Park #2	1
	Southeast PWS	Lakeview	1
		Sun Ray #1	1
		PCCI-Sun Ray	1
		Sun Ray#2 (LSR)	1
	Walk-in-Water PWS	Walk-in-Water	1

TABLE II.

POLK COUNTY UTILITIES

PUBLIC WATER SYSTEMS AND ASSOCIATED WATER USE CAUTION AREAS (BY REGION)

REGIONAL UTILITY SERVICE AREAS	PUBLIC WATER SYSTEM (PWS)	WATER USE CAUTION AREA (WUCA)
Central	Lake Garfield PWS	Southern Water Use Caution Area
	Central PWS	Southern Water Use Caution Area
Northeast	Northeast PWS	*N/A - In the Central Florida Coordination Area*
Northwest	Country Class PWS	Southern Water Use Caution Area
	Northwest PWS	*N/A - In the Hillsborough River Ground Water Basin*
	Foxwood Consecutive PWS	*N/A - In the Hillsborough River Ground Water Basin*
	Padgett Estates Consecutive PWS	*N/A*
	Timbercreek Consecutive PWS	Southern Water Use Caution Area
Southwest	Southwest PWS	Southern Water Use Caution Area
	Bradley Junction PWS	Southern Water Use Caution Area
East	Waverly PWS	Southern Water Use Caution Area
	East PWS	Southern Water Use Caution Area
Southeast	Babson Park PWS	Southern Water Use Caution Area
	Southeast PWS	Southern Water Use Caution Area
	Walk-in-Water PWS	*N/A - In the South Florida Water Management District*

Source of Data: Polk County Utilities Water Use Permits (As of December 31, 2007)

TABLE III.

POLK COUNTY UTILITIES

PERCENTAGE OF RESIDENTIAL AND INDUSTRIAL/COMMERCIAL SERVICES (BY REGION)

REGIONAL UTILITY SERVICE AREAS	RESIDENTIAL		INDUSTRIAL/COMMERCIAL	
	NUMBER OF SERVICES	SERVICES FOR REGION	NUMBER OF SERVICES	SERVICES FOR REGION
Central	5,308	96.40%	198	3.60%
Northeast	20,951	97.70%	494	2.30%
Northwest	11,332	97.69%	268	2.31%
Southwest	12,715	96.94%	401	3.06%
East	2,465	97.78%	56	2.22%
Southeast	1,569	98.06%	31	1.94%

Source of Data: Polk County Utilities 2007 Public Supply Water Use Survey

TABLE IV.

POLK COUNTY UTILITIES

FUNCTIONAL POPULATION AND PER CAPITA WATER USE (BY REGION)

REGIONAL UTILITY SERVICE AREAS	FUNCTION POPULATION (PERSONS)	ADJUSTED PER CAPITA WATER USE (GPCD)[1]
Central	14,238	83
Northeast	61,651	118
Northwest	29,064	115
Southwest	33,994	102
East	6,237	92
Southeast	4,706	90

Source of Data: Polk County Utilities 2007 Public Supply Water Use Survey

TABLE V.

POLK COUNTY UTILITIES

DEMOGRAPHIC CHARACTERISTICS (BY REGION)

REGIONAL UTILITY SERVICE AREAS	NUMBER OF SERVICES			
	RESIDENTIAL			INDUSTRIAL OR COMMERCIAL
	SINGLE-FAMILY	MULTI-FAMILY	MOBILE HOMES	
Central	4,680	26	602	198
Northeast	16,240	1,378	3,333	494
Northwest	9,954	112	1,266	268
Southwest	9,956	1,862	897	401
East	2,113	26	326	56
Southeast	1,360	35	175	31

Source of Data: Polk County Utilities 2007 Public Supply Water Use Survey

TABLE VI.

POLK COUNTY UTILITIES

10-YEAR PROJECTED POPULATION (BY REGION)

REGIONAL UTILITY SERVICE AREAS	PROJECTED POPULATION		INCREASE IN POPULATION	
	YEAR 2008	YEAR 2018	FROM 2008 TO 2018	PERCENT INCREASE
Central	15,112	19,053	3,941	3%
Northeast	68,788	110,495	41,707	6%
Northwest	30,182	38,589	8,407	3%
Southwest	33,576	46,754	13,178	4%
East	6,439	7,599	1,160	2%
Southeast	7,317	12,997	5,680	8%

Source of Data: Polk County 10-Year Water Supply Plan, 2008.

TABLE VII.

POLK COUNTY UTILITIES

PERMITTED WATER USE QUANTITIES (BY REGION)

REGIONAL UTILITY SERVICE AREAS *(Public Water Systems)*	**PERMITTED CAPACITY *"ANNUAL AVERAGE"* (MGD)[1,2]**	ACTUAL DAILY FLOW *"ANNUAL AVERAGE"* (MGD)[1,3]	PEAK DEMAND *"MAX DAY YR"* (MGD)[1,4]
Central Regional Utility Service Area (CRUSA) *(Central/Lake Garfield)*	**2.271**	1.011	1.789
East Regional Utility Service Area (ERUSA) *(Waverly/East)*	**1.065**	0.512	0.972
NE Regional Utility Service Area (NERUSA) [5]	**#REF!**	6.566	11.678
Oak Hills/SFWMD Permit	***3.000***	*0.500*	
Import from Tohopekaliga Water Authority	***3.500***	*0.135*	
NW Regional Utility Service Area (NWRUSA) *(Northwest/Country Class)*	**5.085**	2.937	5.503
SW Regional Utility Service Area (SWRUSA) *(Southwest/Bradley Junction)*	**4.948**	3.352	6.551
SE Regional Utility Service Area (SERUSA) *(Southeast/Babson Park)*	**1.367**	0.580	0.958
Walk in Water (Isolated SFWMD Permit)	**0.094**	0.038	0.125
TOTAL	**#REF!**	14.995	27.576

(1) MGD is Million Gallons per Day

(2) From Water Management District Permits for Entire Regional Utility Service Areas (Includes All Water Systems in Region)

(3) As reported on operating reports to Polk County Health Departmen from October 1, 2007 to September 30, 2008.

(4) Based on actual peak day flow

(5) The Oak Hills service area (SFWMD) is a separate permit from the rest of the NERUSA (SWFWMD).

The NERUSA service area is physically interconnected as one system.

Source of Data: Polk County Utilities Water Status Summary Sheet, January 2009.

TABLE VIII.

POLK COUNTY UTILITIES

UNACCOUNTED FOR WATER LOSS (BY REGION)

REGIONAL UTILITY SERVICE AREAS	ACCOUNTED USES		UNACCOUNTED LOSSES	
	GALLONS	PERCENT OF TOTAL	GALLONS	PERCENT OF TOTAL
Central	1,164,955	98.11%	22,450	1.89%
Northeast	7,150,274	98.09%	139,288	1.91%
Northwest	3,100,819	92.47%	252,575	7.53%
Southwest	3,397,590	98.08%	66,612	1.92%
East	428,857	74.69%	145,321	25.31%
Southeast	488,878	81.37%	111,944	18.63%

Source of Data: Polk County Utilities 2007 Public Supply Water Use Survey

TABLE IX.

POLK COUNTY UTILITIES

EXISTING INTERLOCAL AGREEMENTS FOR PUBLIC WATER SUPPLY INTERCONNECTS (BY REGION)

REGIONAL UTILITY SERVICE AREAS	PUBLIC WATER SYSTEM (PWS)	EXISTING INTERCONNECTS THROUGH INTERLOCAL AGREEMENTS
Central	Lake Garfield PWS	None
	Central PWS	None
Northeast	Northeast PWS	Tohopekaliga Water Authority, City of Haines City
Northwest	Country Class PWS	None
	Northwest PWS	City of Lakeland
	Foxwood Consecutive PWS	*City of Lakeland Consecutive System* , Northwest PWS
	Padgett Estates Consecutive PWS	*City of Lakeland Consecutive System*
	Timbercreek Consecutive PWS	*City of Lakeland Consecutive System*
Southwest	Southwest PWS	City of Lakeland
	Bradley Junction PWS	None
East	Waverly PWS	City of Lake Wales
	East PWS	City of Lake Wales
Southeast	Babson Park PWS	None
	Southeast PWS	None
	Walk-in-Water PWS	None

Source of Data: Polk County Utilities Water Use Permits (As of December 31, 2007)

TABLE X.

POLK COUNTY UTILITIES

PUBLIC WATER SYSTEM AND CORRESPONDING WATER TREATMENT PROCESSES (BY REGION)

REGIONAL UTILITY SERVICE AREAS	PUBLIC WATER SYSTEM (PWS)	TYPE OF WATER TREATMENT
Central	Lake Garfield PWS	Chlorine, ion-exchange, poly-orthophosphate
	Central PWS	Chlorine, poly-orthophosphate
Northeast	Northeast PWS	Chlorine, cascade aeration, poly-orthophosphate
Northwest	Country Class PWS	Chlorine, poly-orthophosphate
	Northwest PWS	Chlorine, poly-orthophosphate
	Foxwood Consecutive PWS	
	Padgett Estates Consecutive PWS	
	Timbercreek Consecutive PWS	
Southwest	Southwest PWS	Chlorine, cascade aeration, poly-orthophosphate, caustic soda
	Bradley Junction PWS	Chlorine
East	Waverly PWS	Chlorine, cascade aeration
	East PWS	Chlorine
Southeast	Babson Park PWS	Chlorine, cascade aeration
	Southeast PWS	Chlorine, cascade aeration
	Walk-in-Water PWS	Chlorine

Source of Data: Polk County Utilities Consumer Confidence Reports (2007).

TABLE XI.

POLK COUNTY UTILITIES

PUBLIC ACCESS REUSE SYSTEM CHARACTERISTICS (BY REGION)

REGIONAL UTILITY SERVICE AREAS	QUANTITIES (MGD)		NUMBER OF METERED CONNECTIONS	
	TOTAL RECLAIMED WATER PRODUCED	BENEFICIAL REUSE (OFFSET GROUNDWATER)	ACTIVE	TOTAL (ACTIVE, DRYLINE, AND FUTURE)
Northeast	1.513	1.487	1,180	13,290
Northwest	0.751	0.751	957	3,437
Southwest	1.528	0.752	785	5,775
Total	3.792	2.990	2,922	22,502

Source of Data: Polk County Utilities 2008 Public Supply Water Use Survey and 2008 Annual Reuse Report.

APPENDIX A

INCLINING BLOCK WATER CONSERVATION RATE STRUCTURE
(POLK COUNTY RESOLUTION 07-137)

RESOLUTION NO. 07-137

Polk County Utilities Department
Rate Resolution

WHEREAS, Polk County, a political subdivision of the State of Florida, by and through its Board of County Commissioners, is authorized to establish and modify water, wastewater and reclaimed water rates, connection fees, service charges and customer deposits for its utility customers; and

WHEREAS, the existing rate structure will not support the five-year financial plan and does not recover the cost of service, encourage conservation for commercial/multi-family potable water users, encourage reclaimed water conservation among any customer classification, nor properly allocate expansion costs to future customers; and

WHEREAS, the Polk County Utilities Department recently completed a Financial Plan and Rate Study that determined revenue requirements and a five-year financial plan, redesigned the service rates to recover the cost of service and promote water and reclaimed water conservation, and calculated connection fees that properly allocate expansion costs to future customers; and

WHEREAS, after a properly noticed Public Hearing, in which the public was given an opportunity to be heard as to the increase in rates, fees and charges proposed by Polk County Utilities;

NOW, THEREFORE, BE IT RESOLVED by the Polk County Board of County Commissioners as follows:

Effective December 1, 2007, the rates charged for water, wastewater and reclaimed water services, miscellaneous fees and charges and customer deposits shall be as set forth in the tables attached as Exhibit "A", as well as all connection fees charged on or after June 1, 2008, by Polk County through its Utilities Department. The rates, fees and charges shall be indexed (increased) five (5) percent per year for the next four (4) years and will become effective on October 1 of each year (October 1, 2008, October 1, 2009, October 1, 2010, and October 1, 2011).

ADOPTED this 20th day of November, 2007.

ATTEST:

RICHARD M. WEISS, CLERK

By: Freda L. Wade
Deputy Clerk

(SEAL)

POLK COUNTY BOARD OF COUNTY COMMISSIONERS

By: Sam Harrison
Chairman

Exhibit "A"

Polk County Utilities Department
Residential Water, Wastewater and Reclaimed Water Rates
Effective December 1, 2007

RESIDENTIAL WATER RATES					
Effective Date	12/1/2007	10/1/2008	10/1/2009	10/1/2010	10/1/2011
Indexing Rate	N/A	5%	5%	5%	5%
Base Charge	$ 6.89	$ 7.23	$ 7.59	$ 7.97	$ 8.37
Usage Block Ranges (in thousands of gallons)					
0 - 3	$ 1.30	$ 1.37	$ 1.44	$ 1.51	$ 1.59
4 - 10	$ 1.73	$ 1.82	$ 1.91	$ 2.01	$ 2.11
11 - 20	$ 3.46	$ 3.63	$ 3.81	$ 4.00	$ 4.20
21 - 30	$ 5.19	$ 5.45	$ 5.72	$ 6.01	$ 6.31
31 - 40	$ 6.92	$ 7.27	$ 7.63	$ 8.01	$ 8.41
Over 40	$ 12.11	$ 12.72	$ 13.36	$ 14.03	$ 14.73

RESIDENTIAL WASTEWATER RATES					
Effective Date	12/1/2007	10/1/2008	10/1/2009	10/1/2010	10/1/2011
Indexing Rate	N/A	5%	5%	5%	5%
Base Charge	$ 25.68	$ 26.96	$ 28.31	$ 29.73	$ 31.22
Usage per thousand gallons up to 7,000 gallons	$ 4.61	$ 4.84	$ 5.08	$ 5.33	$ 5.60

RESIDENTIAL RECLAIMED WATER RATES					
Effective Date	12/1/2007	10/1/2008	10/1/2009	10/1/2010	10/1/2011
Indexing Rate	N/A	5%	5%	5%	5%
Reclaimed Water Base Charge	N/A	N/A	N/A	N/A	N/A
Usage Block Ranges (in thousands of gallons)					
0 - 20	$ 1.00	$ 1.05	$ 1.10	$ 1.16	$ 1.22
21 - 30	$ 3.00	$ 3.15	$ 3.31	$ 3.48	$ 3.65
31 - 40	$ 4.00	$ 4.20	$ 4.41	$ 4.63	$ 4.86
Over 40	$ 6.00	$ 6.30	$ 6.62	$ 6.95	$ 7.30

Polk County Utilities Department
Commercial /Multi-Family Water, Wastewater and Reclaimed Water Rates
Effective December 1, 2007

COMMERCIAL/MULTI-FAMILY WATER RATES

Effective Date	12/1/2007	10/1/2008	10/1/2009	10/1/2010	10/1/2011
Indexing Rate	N/A	5%	5%	5%	5%
5/8" & 3/4" Base Charge	$ 10.33	$ 10.85	$ 11.39	$ 11.96	$ 12.56
5/8" & 3/4" Usage Block Ranges (in thousands of gallons)					
0 - 15	$ 1.73	$ 1.82	$ 1.91	$ 2.01	$ 2.11
16 - 30	$ 3.46	$ 3.63	$ 3.81	$ 4.00	$ 4.20
31 - 60	$ 6.92	$ 7.27	$ 7.63	$ 8.01	$ 8.41
over 60	$ 12.11	$ 12.72	$ 13.36	$ 14.03	$ 14.73
1" Base Charge	$ 17.21	$ 18.07	$ 18.97	$ 19.92	$ 20.92
1" Usage Block Ranges (in thousands of gallons)					
0 - 25	$ 1.73	$ 1.82	$ 1.91	$ 2.01	$ 2.11
26 - 50	$ 3.46	$ 3.63	$ 3.81	$ 4.00	$ 4.20
51 - 100	$ 6.92	$ 7.27	$ 7.63	$ 8.01	$ 8.41
over 100	$ 12.11	$ 12.72	$ 13.36	$ 14.03	$ 14.73
1-1/2" Base Charge	$ 34.43	$ 36.15	$ 37.96	$ 39.86	$ 41.85
1-1/2" Usage Block Ranges (in thousands of gallons)					
0 - 50	$ 1.73	$ 1.82	$ 1.91	$ 2.01	$ 2.11
51 - 100	$ 3.46	$ 3.63	$ 3.81	$ 4.00	$ 4.20
101 - 200	$ 6.92	$ 7.27	$ 7.63	$ 8.01	$ 8.41
over 200	$ 12.11	$ 12.72	$ 13.36	$ 14.03	$ 14.73
2" Base Charge	$ 55.08	$ 57.83	$ 60.72	$ 63.76	$ 66.95
2" Usage Block Ranges (in thousands of gallons)					
0 - 80	$ 1.73	$ 1.82	$ 1.91	$ 2.01	$ 2.11
81 - 160	$ 3.46	$ 3.63	$ 3.81	$ 4.00	$ 4.20
161 - 320	$ 6.92	$ 7.27	$ 7.63	$ 8.01	$ 8.41
over 320	$ 12.11	$ 12.72	$ 13.36	$ 14.03	$ 14.73
3" Base Charge	$ 103.28	$ 108.44	$ 113.86	$ 119.55	$ 125.53
3" Usage Block Ranges (in thousands of gallons)					
0 - 150	$ 1.73	$ 1.82	$ 1.91	$ 2.01	$ 2.11
151 - 300	$ 3.46	$ 3.63	$ 3.81	$ 4.00	$ 4.20
301 - 600	$ 6.92	$ 7.27	$ 7.63	$ 8.01	$ 8.41
over 600	$ 12.11	$ 12.72	$ 13.36	$ 14.03	$ 14.73
4" Base Charge	$ 172.14	$ 180.75	$ 189.79	$ 199.28	$ 209.24
4" Usage Block Ranges (in thousands of gallons)					
0 - 250	$ 1.73	$ 1.82	$ 1.91	$ 2.01	$ 2.11
251 - 500	$ 3.46	$ 3.63	$ 3.81	$ 4.00	$ 4.20
501 - 1,000	$ 6.92	$ 7.27	$ 7.63	$ 8.01	$ 8.41
over 1,000	$ 12.11	$ 12.72	$ 13.36	$ 14.03	$ 14.73
6" Base Charge	$ 344.28	$ 361.49	$ 379.56	$ 398.54	$ 418.47
6" Usage Block Ranges (in thousands of gallons)					
0 - 500	$ 1.73	$ 1.82	$ 1.91	$ 2.01	$ 2.11
501 - 1,000	$ 3.46	$ 3.63	$ 3.81	$ 4.00	$ 4.20
1,001 - 2,000	$ 6.92	$ 7.27	$ 7.63	$ 8.01	$ 8.41
over 2,000	$ 12.11	$ 12.72	$ 13.36	$ 14.03	$ 14.73

Polk County Utilities Department
Commercial/Multi-Family Water, Wastewater and Reclaimed Water Rates
Effective December 1, 2007

COMMERCIAL/MULTI-FAMILY WATER RATES

Effective Date	12/1/2007	10/1/2008	10/1/2009	10/1/2010	10/1/2011
Indexing Rate	N/A	5%	5%	5%	5%
8" Base Charge	$ 550.85	$ 578.39	$ 607.31	$ 637.68	$ 669.56
8" Usage Block Ranges (in thousands of gallons)					
0 - 800	$ 1.73	$ 1.82	$ 1.91	$ 2.01	$ 2.11
801 - 1,600	$ 3.46	$ 3.63	$ 3.81	$ 4.00	$ 4.20
1,601 - 3,200	$ 6.92	$ 7.27	$ 7.63	$ 8.01	$ 8.41
over 3,200	$ 12.11	$ 12.72	$ 13.36	$ 14.03	$ 14.73
10" Base Charge	$ 344.28	$ 361.49	$ 379.56	$ 398.54	$ 418.47
10" Usage Block Ranges (in thousands of gallons)					
0 - 1,150	$ 1.73	$ 1.82	$ 1.91	$ 2.01	$ 2.11
1,151 - 2,300	$ 3.46	$ 3.63	$ 3.81	$ 4.00	$ 4.20
2,301 - 4,600	$ 6.92	$ 7.27	$ 7.63	$ 8.01	$ 8.41
over 4,600	$ 12.11	$ 12.72	$ 13.36	$ 14.03	$ 14.73
12" Base Charge	$ 1,481.35	$ 1,555.42	$ 1,633.19	$ 1,714.85	$ 1,800.59
12" Usage Block Ranges (in thousands of gallons)					
0 - 2,150	$ 1.73	$ 1.82	$ 1.91	$ 2.01	$ 2.11
2,151 - 4,300	$ 3.46	$ 3.63	$ 3.81	$ 4.00	$ 4.20
4,301 - 8,600	$ 6.92	$ 7.27	$ 7.63	$ 8.01	$ 8.41
over 8,600	$ 12.11	$ 12.72	$ 13.36	$ 14.03	$ 14.73

Polk County Utilities Department
Commercial/Multi-Family Water, Wastewater and Reclaimed Water Rates
Effective December 1, 2007

COMMERCIAL/MULTI-FAMILY WASTEWATER RATES

Effective Date	12/1/2007	10/1/2008	10/1/2009	10/1/2010	10/1/2011
Indexing Rate	N/A	5%	5%	5%	5%
Base Charge 5/8" & 3/4" Meter	$ 38.52	$ 40.45	$ 42.47	$ 44.59	$ 46.82
Base Charge 1" Meter	$ 64.20	$ 67.41	$ 70.78	$ 74.32	$ 78.04
Base Charge 1-1/2" Meter	$ 128.40	$ 134.82	$ 141.56	$ 148.64	$ 156.07
Base Charge 2" Meter	$ 205.44	$ 215.71	$ 226.50	$ 237.82	$ 249.71
Base Charge 3" Meter	$ 385.21	$ 404.47	$ 424.69	$ 445.93	$ 468.23
Base Charge 4" Meter	$ 642.01	$ 674.11	$ 707.82	$ 743.21	$ 780.37
Base Charge 6" Meter	$ 1,284.03	$ 1,348.23	$ 1,415.64	$ 1,486.43	$ 1,560.75
Base Charge 8" Meter	$ 2,054.44	$ 2,157.16	$ 2,265.02	$ 2,378.27	$ 2,497.18
Base Charge 10" Meter	$ 2,953.26	$ 3,100.92	$ 3,255.97	$ 3,418.77	$ 3,589.71
Base Charge 12" Meter	$ 5,521.20	$ 5,797.26	$ 6,087.12	$ 6,391.48	$ 6,711.05
Usage Charge Per 1,000 Gallons	$ 4.61	$ 4.84	$ 5.08	$ 5.34	$ 5.60

COMMERCIAL/MULTI-FAMILY RECLAIMED WATER RATES

Effective Date	12/1/2007	10/1/2008	10/1/2009	10/1/2010	10/1/2011
Indexing Rate	N/A	5%	5%	5%	5%
Reclaimed Water Base Charge	N/A	N/A	N/A	N/A	N/A
Usage Block Ranges (in thousands of gallons)					
0 - 20	$ 1.00	$ 1.05	$ 1.10	$ 1.16	$ 1.22
21 - 30	$ 3.00	$ 3.15	$ 3.31	$ 3.48	$ 3.65
31 - 40	$ 4.00	$ 4.20	$ 4.41	$ 4.63	$ 4.86
Over 40	$ 6.00	$ 6.30	$ 6.62	$ 6.95	$ 7.30
Bulk Priority	$ 0.74	$ 0.78	$ 0.82	$ 0.86	$ 0.90
Bulk Interruptible	$ 0.31	$ 0.33	$ 0.35	$ 0.37	$ 0.39

Polk County Utilities Department
Water and Wastewater Connection Charges
Effective June 1, 2008

Residential

Effective Date	6/1/2008	10/1/2008	10/1/2009	10/1/2010	10/1/2011
Indexing Rate	91.0%	5%	5%	5%	5%
WATER CONNECTION FEES					
Type of Residence					
Single Family Detached Units on Lots of 1.0 Acre or Less	$ 2,340	$ 2,457	$ 2,580	$ 2,709	$ 2,844
Single Family Detached Units on Lots of More than 1.0 Usable Acre	$ 3,511	$ 3,687	$ 3,871	$ 4,064	$ 4,268
Multi-family Units Including Apartments, Condos, Duplexes, Triplexes, etc.	$ 1,287	$ 1,351	$ 1,419	$ 1,490	$ 1,564
Mobile Homes on Lots of Less Than 6000 Square Feet	$ 1,404	$ 1,474	$ 1,548	$ 1,625	$ 1,707
Mobile Homes on Lots of 6000 Square Feet or More	$ 2,340	$ 2,457	$ 2,580	$ 2,709	$ 2,844
Park Model RVs	$ 1,287	$ 1,351	$ 1,419	$ 1,490	$ 1,564
Destination RVs *	$ 1,287	$ 1,351	$ 1,419	$ 1,490	$ 1,564
All other RVs Including Transient RVs	$ 1,287	$ 1,351	$ 1,419	$ 1,490	$ 1,564

Effective Date	6/1/2008	10/1/2008	10/1/2009	10/1/2010	10/1/2011
Indexing Rate	1.0%	5%	5%	5%	5%
WASTEWATER CONNECTION FEES					
Type of Residence					
Single Family Detached Units on Lots of 1.0 Acre or Less	$ 3,451	$ 3,624	$ 3,805	$ 3,995	$ 4,195
Single Family Detached Units on Lots of More than 1.0 Usable Acre	$ 3,451	$ 3,624	$ 3,805	$ 3,995	$ 4,195
Multi-family Units Including Apartments, Condos, Duplexes, Triplexes, etc.	$ 2,312	$ 2,428	$ 2,549	$ 2,676	$ 2,810
Mobile Homes on Lots of Less Than 6000 Square Feet	$ 2,312	$ 2,428	$ 2,549	$ 2,676	$ 2,810
Mobile Homes on Lots of 6000 Square Feet or More	$ 3,451	$ 3,624	$ 3,805	$ 3,995	$ 4,195
Park Model RVs	$ 1,898	$ 1,993	$ 2,093	$ 2,197	$ 2,307
Destination RVs *	$ 2,312	$ 2,428	$ 2,549	$ 2,676	$ 2,810
All other RVs Including Transient RVs	$ 3,451	$ 3,624	$ 3,805	$ 3,995	$ 4,195

***NOTE:**

A Destination RV must be: (1) Sited on a lot owned in fee simple by the user; (2) Sited in a park that is a platted subdivision; (3) Sited on a lot 3,000 square feet or larger; and (4) Sited in a park that does not have a dump station or undivided interest lot sales or time share lot sales. This category of user is subject to inspection by Polk County Utilities to ensure that Destination RVs are not transient RVs. Destination RV lots used by Transient RVs will be subject to a 1.0 ERC sewer connection charge.

Polk County Utilities Department
Water and Wastewater Connection Charges
Effective June 1, 2008

Commercial

Water Connection Fees

Commercial Water Connection fees will be assessed on projected daily usage, in accordance with the Polk County Utilities Code, divided by 360 gallons to calculate the Equivalent Residential Connection (ERC). This ERC will be multiplied by connection fee assessed for a single Family Detached Unit on lots one acre or less.

Wastewater Connection Fees

Commercial Wastewater Connection fees will be assessed on projected daily usage, in accordance with the Polk County Utilities Code, divided by 270 gallons to calculate the Equivalent Residential Connection (ERC). This ERC will be multiplied by connection fee assessed for a single Family Detached Unit on lots one acre or less.

Polk County Utilities Department
Schedule of Miscellaneous Fees
Effective December 1, 2007

Fee Description	Current Charge	Proposed Charge Effective 12/1/2007
New Account Charge		
3/4" - 2" meter	$15.00	$55.00
Larger than 2" meter	$30.00	$70.00
Deposit		
Residential		
Water	$40.00	$75.00
Sewer	$60.00	$110.00
Combined	$100.00	$185.00
Commercial		
Water	2.5 X Est. Monthly Bill	2.5 X Est. Monthly Bill
Sewer	2.5 X Est. Monthly Bill	2.5 X Est. Monthly Bill
Combined	2.5 X Est. Monthly Bill	2.5 X Est. Monthly Bill
Same Day Service (During Business Hours)	$10.00	$80.00
Same Day Service (After Hours Service)	$25.00	$80.00
Return Check or Draft *		
Checks $50 or less	$25.00	As established by Polk County Clerk of Courts by policy (no change at this time)
Checks $51-$300	$30.00	
Checks $301 or more	$40 or 5% of face value, whichever is greater	
Premise Visit Charge	$15.00	$60.00
Disconnect for Nonpayment		
Less than 2" Meter	$15.00	$60.00
2" Meter and above	$30.00	$105.00
3/4" Temporary Absence Disconnect	$15.00	$60.00
Service Restoration/Reconnection Charge		
Less than 2" meter	$15.00	$60.00
2" Meter and above	$30.00	$105.00
Meter Installation/Reinstallation Charge		
3/4" Meter	$450.00	$450.00
1" Meter	$550.00	$550.00
1-1/2" Meter	$900.00	$900.00
2" Meter	$1,415.00	$1,415.00
Larger than 2" meter	Actual Cost	Actual Cost
Temporary Meter Installation		
2" Meter On Hydrant	$50.00	$105.00
Installation requiring Line Tap	$100.00	$195.00
Meter Exchange Charge (for size change)	See Meter Installation charge	

*NOTE: Return check fees are established by the Polk County Clerk of Courts Office and are adjusted from time to time.

Polk County Utilities Department
Schedule of Miscellaneous Fees
Effective December 1, 2007

Fee Description	Current Charge	Proposed Charge Effective 12/1/2007
Meter Test Charge (Field Test) Less than 2" Meter 2" Meter and above (This fee is waived if meter is not registering within AWWA standards.)	 $25.00 Actual Cost	 $90.00 Actual Cost
Penalty for Meter Tampering/Theft of Service 1st Infraction 2nd Infraction 3rd Infraction	 $100.00 $500.00 $1,000.00	 $100.00 $500.00 $1,000.00
Penalty for Obscured Meter	$25.00	$60.00
Penalty for Connection to Other Systems	$500.00	$500.00
Penalty for Cross Connection	$500.00	$500.00
Surcharge for High Strength Industrial Wastes shall be calculated and applied pursuant to Section 30 (E), "Wastewater Constituent Limitations," contained in Polk County Utilities Code Ordinance 03-21 as amended.		
Relocate Meter Less than 2" Meter 2" Meter and above	 $175.00 Actual Cost	 $175.00 Actual Cost
Water Audit	$25.00	$75.00
Reclaimed Water Follow-up Inspection	$50.00	$60.00
Late Payment	$3.00 or 5% of payment due, whichever is greater, on balances over $14.99	$6.00 or 5% of payment due, whichever is greater, on balances over $14.99
Backflow test (Municipal Charge) 3/4' to 2" Meter Larger than 2" Meter	 $25.00 Actual Cost	 $90.00 Actual Cost

APPENDIX B

SCHEDULE OF CONSERVATION PROJECTS

APPENDIX B

POLK COUNTY UTILITIES

SCHEDULE OF CONSERVATION PROJECTS

REGIONAL UTILITY SERVICE AREAS INCLUDED	DESCRIPTION OF PROJECT	IMPLEMENTATION DATES
Southwest	Polk County SWRUSA Carter Road Reclaimed Water Main	10/01/2009 to 09/30/2011
ALL	Polk County Utilities Rain Sensor Rebate	01/31/2010 to 08/31/2011
Northeast	Polk County NERUSA Holly Hill Reclaim Storage & Pumping Station	03/31/2009 to 12/31/2010
Northwest	Polk County NWRUSA Neat & Sweet 170 Million Gallon Reclaim Storage & Pumping Station	10/01/2009 to 06/30/2011
ALL	Code Enforcement of Water Restrictions	On-going
ALL	Community Education and "Kit" give-a-ways	On-going

Source of Data: Polk County Utilities FY2009 AND FY2010 Cooperative Funding Applications.

Polk County Utilities, Florida

UTILITIES FATS, OILS, AND GREASE POLICY MANUAL

Utilities Code Reference Manual 6(G)

Polk County Board of County Commissioners

Bob English	Melony Bell	Ed Smith	Todd Dantzler	Sam Johnson
District 1	District 2	District 3	District 4	District 5

Jim Freeman	Bill Beasley, PE	Gary Fries, PE
County Manager	Deputy County Manager	Utilities Director

December 2010

UTILITIES FATS, OILS, AND GREASE POLICY MANUAL

December 2010

10.0 GENERAL

10.1 GENERAL

This MANUAL, which contains the PCU Fats, Oils, and Grease (FOG) Policy, shall serve to insure that all PCU wastewater systems are operated and maintained in accordance with all Federal, State, and Local regulations.

A. The ENGINEER or CUSTOMER shall be required to review this MANUAL, in addition to the "Utilities Standards and Specifications Manual" and "Industrial Wastewater Pretreatment Policy Manual", before designing a project or installing a fats, oils, or grease interceptor or trap.

B. PCU believes this MANUAL will provide the ENGINEER or CUSTOMER with the understanding of the need to regulate the introduction of fats, oils, and grease into PCU's wastewater systems.

C. PCU shall insure that the standards and specifications as set forth in this MANUAL will be uniformly enforced.

D. PCU reserves the right to update this MANUAL as necessary due to changes in FDEP policies and regulations.

E. PCU reserves the right to institute at any time a fats, oils, and grease monitoring program either utilizing PCU employees, PCU approved private contractors that are selected and paid for by the CUSTOMER, or a PCU contracted monitoring service on a cost recovery basis from the CUSTOMER.

10.2 GOALS

PCU desires to be proactive in complying with the Clean Water Act (CWA) and cooperating with the Environmental Protection Agency (EPA) initiative to abate wastewater overflows within the jurisdiction of PCU in order to protect the public health and the quality of surface waters.

10.3 OBJECTIVES

The build up of fats, oils, and grease within a wastewater system result in overflows and excessive maintenance of wastewater collection and treatment systems. Such overflows can result in the transmission of diseases, toxic materials, and/or other hazardous liquids into the environment. Therefore, it is necessary to establish and maintain a fats, oils, and grease monitoring program to protect the health of PCU CUSTOMERS and/or the general public.

UTILITIES FATS, OILS, AND GREASE POLICY MANUAL

10.4 DEFINITIONS

A. Analogous Words and Terms

For the purpose of this MANUAL, the following analogous words and terms shall be interpreted to have similar meanings when not inconsistent with the context:

1. Words used in the singular number include the plural and words used in the plural number include the singular.

2. Words used in the present tense include the future tense.

3. The word "constructed" includes the word "erected," "built," "installed," "rebuilt", and "repaired".

4. The word "structure" includes the word "building".

5. The word "include" is a word of enlargement and not limitation.

6. The word "shall" is mandatory and the word "may" is permissive.

B. Abbreviations

1. Agencies:

AASHTO	American Association of State Highway and Transportation Officials
ANSI	American National Standards Institute
APWA	American Public Works Association
ASSE	American Society of Sanitary Engineers
ASTM	American Society for Testing Materials
AWWA	American Water Works Association
DIPRA	Ductile Iron Pipe Research Association
EPA	United States Environmental Protection Agency
FCCCHR	Foundation for Cross Connection Control and Hydraulic Research of the University of Southern California

UTILITIES FATS, OILS, AND GREASE POLICY MANUAL

FDOT	Florida Department of Transportation
FDEP	Florida Department of Environmental Protection
FDNR	Florida Department of Natural Resources
FDOH	Florida Department of Health
FPSC	Florida Public Service Commission
HUD	Department of Housing and Urban Development (Federal and/or State)
NCPI	National Clay Pipe Institute
NEC	National Electrical Code
NEMA	National Electrical Manufacturers Association
NFPA	National Fire Protection Association
OSHA	Occupational Safety and Health Administration (Federal and/or State)
PCDNR	Polk County Division of Natural Resources
PCDOT	Polk County Division of Transportation
PCU	Polk County Utilities
UL	Underwriters Laboratories

2. General

DIP	Ductile Iron Pipe
fps	feet per second
F.A.C.	Florida Administrative Code
gpd	gallons per day
gpm	gallons per minute

HDPE	High Density Polyethylene
mgd	million gallons per day
p.s.i.	Pounds per Square Inch (gauge)
PVC	Polyvinyl Chloride
ROW	Right-of-Way

C. Definitions

Except where specific definitions are used within a specific section of this MANUAL for the purpose of such sections, the following words and phrases are defined and shall have the meaning assigned except in those instances where the context clearly indicates a different meaning. The words "shall" and "will" are mandatory and not discretionary. The word "may" is permissive.

BOARD: the Polk County Board of County Commissioners.

DIRECTOR: the person who is responsible for the day to day administration and management of Polk County Utilities.

ENVIRONMENTAL PROTECTION AGENCY (EPA): the Environmental Protection Agency of the United States, its Administrator, or other duly authorized representative of said agency.

FOOD SERVICE ESTABLISHMENT: any facility engaged in preparing and/or packaging food or beverages for sale or consumption, on or off site, with the exception of private residences. Food service establishments shall include, but are not limited to food courts, food manufacturers, food packagers, restaurants, grocery stores, convenience stores, bakeries, cafeterias, lounges, hospitals, correctional facilities, hotels, nursing homes, churches and schools.

FLOATABLE GREASE: oil, fat or grease in a physical state such that it will separate, by gravity, from wastewater by treatment in an approved pretreatment device.

GARBAGE GRINDER: a device that shreds or grinds up solid or semisolid waste materials into smaller particles for discharge into the wastewater collection system.

GRAB SAMPLE: a sample that is taken from a wastewater discharge on a one-time basis with no regard to the volume of flow in the discharge.

GRAY WATER: all of the liquid contained in a grease interceptor that lies below the floating grease layer and above the food solids (sediment) layer. Wastewater that does not contain bodily fluids or waste products.

GREASE: a material either liquid or solid, composed primarily of fat, oil, and grease from animal or vegetable sources. The terms "fats, oils, and grease" (FOG) and "oil and grease" shall be included within this definition.

GREASE INTERCEPTOR: a device located underground and outside of a food service establishment designed to collect, contain or remove food wastes and grease from the waste stream while allowing the liquid waste to discharge to the wastewater collection system by gravity.

GREASE TRAP: a device whose rated flow is less than 50 gpm, located in a food service establishment and/or under a sink designed to collect, contain or remove food wastes and grease from the waste stream while allowing the balance of the liquid waste to discharge to the wastewater collection system by gravity.

NOTICE OF VIOLATION (NOV): a written notice informing a user that a violation of this ordinance has occurred.

NOTIFY: contact by telephone, in person or via certified United States Mail, return receipt requested.

POLK COUNTY UTILITIES: the Polk County entity which has the responsibility of administering, operating, and maintaining the PCU Utility Systems.

PREMISES: a parcel of real estate or portion thereof including any improvements thereon which is determined by PCU to be a single user for the purposes of receiving, using and paying for sewer services.

PRETREATMENT REVIEW COMMITTEE: a panel made up of the following individuals whose main function is to review user appeals relating to grease issues, Chief Building Inspector or designee, Utilities Director or designee, and the Pretreatment Coordinator or designee. The County Attorney or designee shall serve as a non-voting member of the panel providing substantive and procedural legal advice to the Pretreatment Review Committee.

PUBLICLY OWNED TREATMENT WORKS (POTW): a treatment works, also referred to as a Wastewater Treatment Plant, as defined by Section 212, CWA, (33 U.S.C. 1292) which is owned by PCU. Any devices and systems used to pump, store, treat, recycle and reclaim municipal sewage or industrial wastes of a liquid nature. The POTW shall include PCU owned and maintained, mains, lift stations that convey wastewater to the POTW. Any sewers that convey waste waters to the POTW from

UTILITIES FATS, OILS, AND GREASE POLICY MANUAL

persons outside of a PCU utility service area. Users of the POTW by contract or agreement with PCU.

REFERENCE MANUAL 6(A): the Polk County Utilities Administration Manual, adopted by reference herein.

REFERENCE MANUAL 6(B): the Polk County Utilities Standards and Specifications Manual, adopted by reference herein.

REFERENCE MANUAL 6(C): the Polk County Utilities Cross-Connection Control Policy Manual, adopted by reference herein.

REFERENCE MANUAL 6(D): the Polk County Utilities Reclaimed Water Policy Manual, adopted by reference herein.

REFERENCE MANUAL 6(E): the Polk County Industrial Wastewater Pre-Treatment Policy Manual, adopted by reference herein.

REFERENCE MANUAL 6(F): the Polk County Utilities Water Conservation Policy Manual, adopted by reference herein.

REFERENCE MANUAL 6(G): this Manual, the Polk County Utilities Fats, Oils, and Grease Policy Manual, adopted by reference herein.

REPLACEMENT COSTS: expenditures for obtaining and installing equipment, accessories or appurtenances necessary to retain design capacity and performance of the POTW throughout the jurisdiction of PCU

SANITARY SEWER OVERFLOW: releases of untreated sewage into the environment.

WASTEWATER: the liquid and water containing industrial or domestic wastes from dwellings, commercial buildings, industrial facilities, institutions and any other source, whether treated or untreated which is contributed to or permitted to enter the POTW.

20.0 FOOD SERVICE ESTABLISHMENTS

20.1 GENERAL

All food service establishments are required to have a grease interceptor. The

requirements in this document are in addition to any requirements of the Florida

UTILITIES FATS, OILS, AND GREASE POLICY MANUAL

Plumbing Code and the Standard Plumbing Code. Multi-family dwellings, such as triplexes, quadruples, townhouses, condominiums, apartment buildings, apartment complexes or areas of intensified dwellings shall install a grease interceptor, if PCU determines that such a device is needed. A grease trap/interceptor inspection fee, as established by a separate Board approved resolution, shall be paid through the monthly service bill by all food service establishments required to install and maintain grease traps/interceptors in accordance with this MANUAL. All food service establishments shall maintain records on the premises regarding the serving of and/or repairs to its grease interceptor(s) or grease trap(s). Said record shall be made available for inspection by PCU upon request. The record shall include receipts from the hauler servicing the interceptor/trap with the date and amount of wastes pumped. If a grease trap is serviced and/or cleaned by the establishment's employees, the record shall indicate who performed the service and cleaning and the date said service and cleaning took place.

20.2 NEW FACILITIES

Upon the effective date of this document, food service establishments which are newly proposed or constructed, or existing facilities which will be expanded or renovated, where such facility did not previously exist, shall be required to install, operate and maintain a grease interceptor or grease trap according to the requirements detailed in this document.

20.3 EXISTING FACILITIES

For the purpose of sizing and installation of grease interceptors, all food service establishments existing within PCU's utility service areas prior to this MANUAL shall be

UTILITIES FATS, OILS, AND GREASE POLICY MANUAL

permitted to operate and maintain existing grease traps/interceptors provided same are in efficient operating condition. Upon the effective date of this document, PCU may require an existing food service establishment to install, operate and maintain a new grease interceptor or trap that complies with the requirements of this MANUAL or to modify or repair any noncompliant plumbing or existing interceptor or trap within ninety (90) days of written notification by PCU when any one or more of the following conditions exist:

20.3.1 The facility is found to be contributing oils and grease in quantities sufficient to cause line stoppages or necessitate increased maintenance on the wastewater collection system; and/or,

20.3.2 The facility is found to be contributing oils and grease in quantities in excess of 100mg/L; and/or,

20.3.3 The facility has an undersized, irreparable or defective grease interceptor or trap; and/or,

20.3.4 The facility has a garbage grinder; and/or,

20.3.5 Remodeling of the food preparation or kitchen waste plumbing system is performed which requires a plumbing or building permit to be issued; and/or,

20.3.6 The existing facility is sold or undergoes a change of ownership.

30.0 PLUMBING CONNECTIONS

Grease interceptors or traps shall be located in the food service establishments lateral sewer line between all fixtures, which may introduce grease into the sewer system and the connection to PCU's wastewater collection system. Such fixtures shall include but not be limited to, sinks, dishwashers, automatic hood wash units, floor drains in food

UTILITIES FATS, OILS, AND GREASE POLICY MANUAL

preparation and storage areas, and any other fixture which is determined to be a potential source of grease. All garbage grinders installed within food service establishments must be plumbed through the grease interceptor(s). Grease interceptor capacity and maintenance frequency must be increased in all such instances to account for increased solids accumulation. Wastewater from sanitary facilities and other similar fixtures shall not be introduced into the grease interceptor or trap under any circumstances.

30.1 GREASE TRAPS

Grease Traps shall be prohibited for new food service establishments, except those facilities where inadequate space is available for the installation of a grease interceptor. Approval of the installation of a grease trap instead of a grease interceptor at a new food service establishment shall meet the following criteria:

30.1.1 Trap design and location:

Grease traps shall conform to the standards in the Plumbing and Drainage Institute (PDI) Standard- G101 document. Grease traps shall be installed in strict accordance with the manufacturer's instructions. Grease traps shall be equipped with a cover that can be opened for inspection and sampling and a mechanism for secure closing.

30.1.2 Trap Capacity:

The capacity of the grease trap shall be related to the flow rate as indicated in the table below:

Flow Rates and Grease Retention Capacity Ratings for Grease Interceptors			
	Flow Rate (GPM)	Grease Retention Capacity Rating (Pounds)	Maximum Capacity of Fixtures Connected to Interceptor (Gallons)
For Commercial And Institutional Use	10	20	25.0
	15	30	37.5
	20	40	50.0
	25	50	62.5
	35	70	87.5
	50	100	125.0

30.1.3 Flow-through Rate:

Flow-through rates shall be calculated in accordance with the procedures in the PDI Standards G101 document.

30.1.4 Flow Control Device:

Grease traps shall be equipped with a device to control the rate of low through the unit. The rate of flow shall not exceed the manufacturers rated capacity recommended in gallons per minute for the grease trap.

30.1.5 Venting:

The flow-control device and the grease trap shall be vented in accordance with the Florida Plumbing Code current edition. The vent shall terminate not less than six (6) inches above the flood-rim level or in accordance with the manufacturers' instructions.

30.1.6 Inspection, Cleaning, and Maintenance:

UTILITIES FATS, OILS, AND GREASE POLICY MANUAL

Each food service establishment shall be solely responsible for the cost of trap installation, inspection, cleaning, and maintenance. Cleaning and maintenance must be performed when the total volume of captured grease and solid material displaces more than twenty percent (20%) of the total volume of the unit. Each food service establishment shall determine the frequency at which their grease trap shall be cleaned. All grease traps shall be serviced and cleaned a minimum of every 45 calendar days. PCU reserves the right to require a more frequent servicing schedule based on its periodic evaluation of the cleaning and maintenance record for each individual grease trap.

30.1.7 Repairs:

The food service establishment shall be responsible for the cost and scheduling of all repairs to its grease trap(s). Repairs required by PCU shall be completed within ten (10) calendar days after the date of written notice of required repairs is received by the facility, unless PCU approves in writing of a different schedule.

30.1.8 Disposal:

Grease and solid materials removed from a grease trap shall be disposed of in the solid waste disposal system (garbage can) if cleaned by facility owner or employees. No grease or solids removed from a grease trap shall be returned to any grease interceptor, private wastewater system, storm water collection system, or to any portion of PCU's wastewater collection system.

30.2 GREASE INTERCEPTORS:

UTILITIES FATS, OILS, AND GREASE POLICY MANUAL

Grease interceptors shall be installed at all new food service establishments except where physical space is limited. All new and existing grease interceptors shall meet the following criteria:

30.2.1 Interceptor Design and Location:

Grease interceptors shall have a minimum of two (2) compartments and shall be capable of separation and retention of grease and storage of settled solids. Interceptor design shall conform to the requirements of Florida Plumbing Code Sections 10035.1 and1003.5.2. A control manhole over each compartment for monitoring purposes shall be required and installed at the owner/operators sole expense. Covers shall have a gas tight fit. The grease interceptor shall be designed, constructed and installed with an H-20 traffic bearing capacity. Flow control devices shall be required where the water flow through the interceptor may exceed it rated flow. Interceptors shall be installed in a location outside of the building, which provides easy access at all times for inspections, cleaning and proper maintenance, including pumping.

30.2.2 Interceptor Capacity:

Grease interceptor capacity calculations shall be performed by each food service establishment based on size and type of operation according to the formula contained in Table 1003.4.1 and Table 1003.5.1 of the Florida Plumbing Code or this MANUAL, which is greater. Minimum capacity of any one unit shall be seven hundred fifty (750) gallons as required by the Florida Plumbing Code and maximum capacity shall be one thousand two hundred fifty (1,250) gallons.

UTILITIES FATS, OILS, AND GREASE POLICY MANUAL

Where sufficient capacity cannot be achieved with a single unit, installation of grease interceptors in series is required. The capacity of the grease interceptor required for food manufacturing or processing facilities or multi-family dwellings which are not covered by the Florida Plumbing Code shall be approved by PCU in accordance with the UTILITIES CODE utilizing the mass and type of food prepared, the wastewater volume produced from food preparation or manufacture, total hours of operation per day, and a load factor depending on the installed equipment.

30.2.3 Inspection, Pumping, and Maintenance:

Each food service establishment shall be responsible for the costs of installing, inspecting, pumping, cleaning, and maintaining its grease interceptor. Pumping services shall include the complete removal of all contents, including floating materials, wastewater, and bottom sludge and solids from the interceptor. Grease interceptor cleaning shall include scraping excessive solids from the walls, floors, baffles, and all pipe work. The return of gray water back into the grease interceptor from which the wastes ere removed will not be allowed. It shall be the responsibility of each food service establishment to inspect its grease interceptor during the pumping procedure to ensure that the interceptor is properly cleaned out and that all fittings and fixtures inside the interceptor are in working condition and functioning properly.

30.2.4 Interceptor Pumping Frequency:

UTILITIES FATS, OILS, AND GREASE POLICY MANUAL

All grease interceptors shall be pumped and serviced every 120 calendar days. PCU reserves the right to require a more frequent servicing schedule based on its periodic evaluation of the cleaning and maintenance record for each individual grease interceptor.

Each food service establishment shall determine the frequency at which its interceptor(s) shall be pumped according to the following criteria:

A. When the floatable grease layer exceeds six inches (6”) in depth as measured by an approved dipping method; or,

B. When the settable solids layer exceeds eight inches (8”) in depth as measured by an approved dipping method; or,

C. When the total volume of settable solids is more than three quarters (3/4) of the total clearance of the outlet pipe located at the bottom of the interceptor; or,

D. When the total volume of captured grease and solid material displaces more than twenty percent (20%) of the capacity of the interceptor as calculated using an approved dipping method; or,

E. When the interceptor is not retaining/capturing oils and greases; or the oil/grease concentration of the water being discharged, as determined through sampling and analysis, is greater than 100 mg/L.

30.2.5 Repairs:

Each food service establishment shall be responsible for the cost and scheduling of all repairs to its grease interceptor(s). Repairs required by PCU shall be

UTILITIES FATS, OILS, AND GREASE POLICY MANUAL

corrected within ten (10) calendar days after the date of written notice or requiring the repairs is received by the facility of unless notice from PCU establishes a different compliance date.

30.2.6 Disposal:

Wastes removed from each grease interceptor shall be disposed of at a facility permitted to receive such wastes or at a location designated by PCU for such purposes. Neither grease nor solid materials removed from interceptors shall be returned to any grease interceptor, private wastewater system, storm water collection system, or to any portion of PCU's wastewater collection system.

30.3 Interceptor Additives:

Any chemicals, enzymes, emulsifiers, live bacteria or other grease cutters or additives shall be approved by PCU prior to their use by the food service establishment or the grease hauler. Material Safety Data Sheets and any other applicable information concerning the composition, frequency of use and mode of action of the proposed additive shall be sent to PCU together with a written statement outlining the proposed use of the additive(s). Based upon the information received and any other information solicited from the potential user or supplier, PCU shall permit or deny the use of the additive in writing. All additives shall be evaluated by PCU to determine if they will be compatible with PCU's WWTF and wastewater collection system. Permission to use any specific additive may be withdrawn by PCU at any time. The addition of any of these

UTILITIES FATS, OILS, AND GREASE POLICY MANUAL

chemicals or additives does not eliminate the need to pump and service a grease trap or interceptor.

30.4 Alternative Grease Removal Devices or Technologies:

Alternative devices and technologies such as automatic grease removal systems shall be subject to written approval by PCU prior to installation. Approval of the device shall be based on demonstrated (proven) removal efficiencies and reliability of operation. PCU may approve these types of devices depending on manufacturers' specifications on a case-by-case basis. The food service establishment may be required to furnish analytical data demonstrating that grease discharge concentrations to PCU wastewater collection system will not exceed the established limitation.

40.0 ENTRY, INSPECTION, AND SAMPLING

40.1 Entry:

All food service establishments shall allow PCU, bearing proper credentials and identification, to all parts of the premises during reasonable business hours, for the purpose of inspection, observations, and sampling in accordance with the provisions of this Document. Any user refusing PCU entry to or upon the premises of the user for the purposes of inspection, sampling effluents or performing such other duties as required by the document shall constitute a violation of the terms of this document. PCU may seek a warrant or use any other legally available procedures to discharge their duties.

40.2 Inspection and Sampling:

UTILITIES FATS, OILS, AND GREASE POLICY MANUAL

PCU may inspect the facilities of any food service establishment, to ascertain compliance with this document. Grease interceptors and traps shall be inspected as necessary to insure compliance with specific grease trap/interceptor requirements and to determine if proper cleaning and maintenance schedules are being performed. PCU may collect effluent samples to determine compliance. PCU shall re-inspect any user that received a deficiency notice after the original inspection. In the event that the user is compliant with all of the deficiencies, there shall be no charge for the re-inspection. In the event of continuing non-compliance, successive re-inspections will be scheduled and appropriate fees shall be charged to the user for the first and all successive re-inspections. Such fees may be charged to the appropriate account of the Polk County Utilities Water & Sewer bill.

50.0 ENFORCEMENT, REVIEW COMMITTEE, MEETINGS, CITATIONS, INJUNCTIVE RELIEF, AND DAMAGE ASESSMENTS

50.1 Enforcement Response Plan

Whenever PCU determines that a grease trap or interceptor is in need of pumping, repairs or other maintenance, or in the event that an additional grease interceptor is required, PCU shall proceed as prescribed below:

50.1.1 PCU conducting the inspection who determines that a violation exists shall immediately notify the owner/manger of the food service establishment that a violation exists and must be addressed promptly.

UTILITIES FATS, OILS, AND GREASE POLICY MANUAL

50.1.2 PCU may issue the food service establishment a Notice of Violation (NOV) stating the nature of the violations. Upon issuance of an NOV:

A. PCU shall perform a first re-inspection ten (10) calendar days after issuance of the NOV, to allow sufficient time for corrective action by the food service establishment of be completed. In the event that the food service establishment is compliant with all of the deficiencies, there shall be no charge for the re-inspection. If all of the deficiencies have not been corrected, a first re-inspection fee shall be charged to the food service establishment in accordance with the fee schedule adopted by a separate Board approved resolution. A second re-inspection will be performed after a minimum of ten (10) additional calendar days have passed. In the event that the food service establishment is compliant with all of the deficiencies that shall be no additional charge for the re-inspection. If all of the deficiencies have still not been corrected, a second re-inspection fee shall be charged to the food service establishment in accordance with the fee schedule adopted by a separate Board approved resolution. If a third or more re-inspections are required a re-inspection fee for each successive re-inspection shall be charged to the food service establishment in addition to other enforcement actions if all of the deficiencies have still not been corrected in accordance with the fee schedule adopted by

a separate Board approved resolution. All fees shall be added to the Polk County Water and Sewer bill of the food service establishment.

B. If the food service establishment responds with an acceptable explanation for the violation, and a plan for rectifying the situation, or makes good a deficiency within the prescribed time, enforcement ceases at the discretion of PCU.

C. If a food service establishment continues to violate the provisions set forth in this document, or fails to initiate/complete corrective action in response to a NOV, PCU may pursue one of more of the following options:

1. Pump the grease interceptor and place the appropriate charge on the facility's monthly sewer bill in accordance with the fee schedule adopted by a separate Board approved resolution; and/or,
2. Assess further inspection fees as provided in accordance with the fee schedule adopted by a separate Board approved resolution; and/or,
3. Terminate water and sewer service.

50.2 Pretreatment Review Committee

At any point during the enforcement process, a food service establishment may request a meeting of the Pretreatment Review Committee to appeal any request being made by PCU.

50.3 Conciliation Meetings:

UTILITIES FATS, OILS, AND GREASE POLICY MANUAL

At any point before or during the enforcement action, PCU may, but is not required to invite representatives of the user to a conciliation meeting to discuss the violations and methods of correcting the cause of the violation. If the user and PCU can agree to appropriate remedial and preventive measures, they shall commit such agreement to writing with provisions for a reasonable compliance schedule. If an agreement is not reached through the conciliation process, PCU shall continue with the enforcement policy as outlined in this document and take all appropriate action to insure compliance with his document or other law or regulation.

50.4 Civil and Injunctive Relief

Upon approval of the County Attorney or designee, PCU may file, in a court of competent jurisdiction, a suit seeking the issuance of an injunction, damages or other appropriate relief to enforce the provisions of this document or other applicable law or regulation. Suit may be brought to recover any and all damages suffered by PCU as a result of any action or inaction of any user or other person who cause or suffers damage to occur to the POTW or for any other expense, loss or damage of any kind or nature suffered by PCU.

50.5 Assessment of Damages to Users

When the discharge from a food service establishment causes an obstruction, damage or any other impairment to the facilities or any expense of whatever character or nature to PCU, PCU may charge the expenses incurred by PCU to clear the obstruction, repair damage to the facility and any other expenses or

UTILITIES FATS, OILS, AND GREASE POLICY MANUAL

damage of any kind or nature suffered by PCU. PCU shall file a claim with the food service establishment or any other person causing or suffering said damages to occur seeking reimbursement for any and all expenses or damages suffered by PCU. If the claim is ignored or denied, PCU may charge the expense to the Polk County Water and Sewer bill, or notify the County Attorney, or designee, to take such measures as shall be appropriate.